TKHM-Z/TSM-Z/T4
Multifunctional Adapter

- Suitable for all kind of standard sensors
- Compact construction
- Simple and fast implementation of other functions
- High temperature resistance
- LED indication of status and output signal

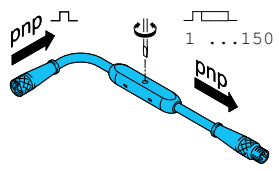

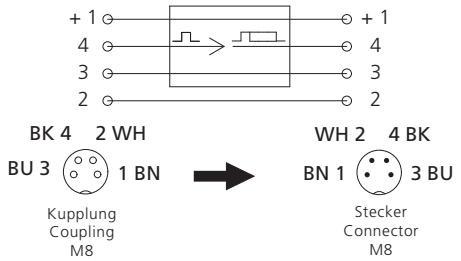

BK = **black**
BN = **brown**
BU = **blue**
WH = **white**

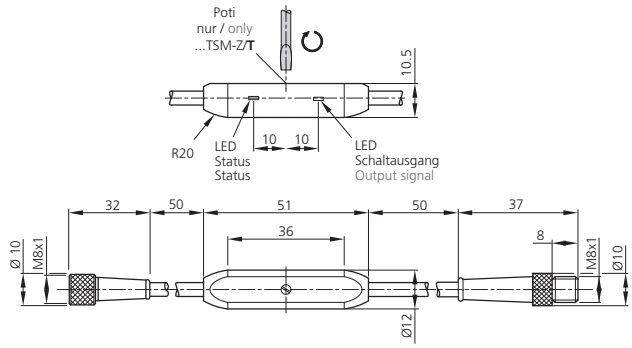

Safety instructions

The Instruments are not to be used for safety applications, in particular applications in which safety of persons depends on proper operation of the instruments.
These instruments shall exclusively be used by qualified personnel.

TECHNICAL INFORMATION (typ.)	+20°C, 24V DC
Operating principle	pnp pulse stretching
Size	M8 x 1 (thread)
Characteristics	metal coupling ring
Maximum rating	200 mA, short-circuit-proof
Service voltage	10 ... 35 V DC
Internal power consumption	< 20 mA
Input	pnp
Switching output	pnp, 1 ...150 ms
Switching frequency	500 Hz
Ambient temperature	-20 ... +70 °C
Protection class	IP 67
Protection degree	III, operation on protective low voltage
Casing material	plastics
Connection	Connector/Coupling, M8, 4-poled
Min. pulse stretching	> 0,1 ms