Insulated Enclosure KO 4718

with flat terminals
for plug-in Technology

- Width 100 mm
- Max. 20 flat terminals with high torque, captive plus-minus-terminal screws
- Removable Terminal strip
- Optionally with Blanking strip
- Optionally with changeable plate

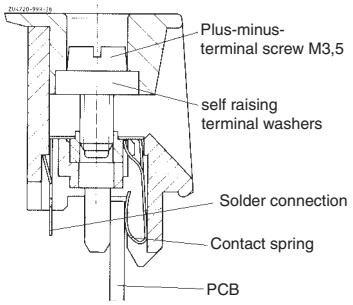

Flat terminal for plug-in technology

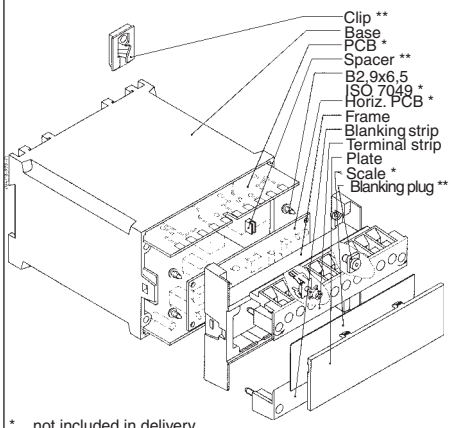

* not included in delivery
** see Accessories

Technical Data

Order references:

Front colour	beige	light grey RAL 7035	blue RAL 5015	Enclosure variant with
KO 4718.118.20.01	.001	.034	.042	front plate
KO 4718.118.20.01	.032	.040	.043	platte
KO 4718.118.20.01	.033	.041	.044	platte clear

Outer dimensions: 100 x 73.2 x 118.2 mm

Enclosure material: PC-GF, base black, front colour see table

Temperature stability:		
complying with UL 746 B:		125 °C
complying with Vicat ISO 306	Meth. B:	148 °C
compl.with ISO 75-2	Meth. A:	138 °C
	Meth. B:	144 °C

Max. permitted power dissipation: 29 W for stand-alone enclosure at normal climate 23/50-1 — ISO 554

Specific thermal resistance: R_{th} = 3.5 K / W for stand-alone enclosure

Flame retardancy:
complying with UL 94: V-0; Plate clear = V-2
complying with IEC 60 707: BH 2-30

Number of terminals: 20; < 20 on request

Terminal material: CuSn6 tin-plated

Max. cross section for connection: 2 x 1.5 mm² stranded ferruled DIN 46 228-1/-2/-3/-4
2 x 2.5 mm² solid

Insulation of wires length: 10 mm

Max. contact resistance to printed circuit board: 10 mΩ

Max. current carrying capacity: 10 A

Wire fastening: captive plus-minus terminal screws M3.5 with self raising terminal washers, terminal strip can be removable separately

Torque: max. 0.8 Nm

Inner connection: Direct connection on PCB, solder connection possible

Enclosure fastener:
1) Snap-on fastener on top hat rail — EN 50 022
2) Screw fixing M4, grid 80 mm

Creepage current resistance: CTI 175 ≙ insulated material III a — IEC 60 664-1

Air gap and creepage distance: ≥ 4 mm — IEC 60 664-1

Type of protection:
Enclosure IP 40 — IEC 60 529
Terminals IP 20 — IEC 60 529
contact protection complies with VGB 4

Print area: 33 x 100 mm (on front plate)

Printed circuit board: see printed circuit design

Printed circuit board holder: Guide ribs on the small side and on the enclosure bottom for 5 PCBs

Net weight: approx. 240 g

Accessories:
ET 4720-1-2: 2 clips for screw fixing
ET 4720-0-60: Spacer for PCB coding
K70/150-0-48: Blanking plug grey
KO 4718-26.2: Blanking strip beige
KO 4718-26.3: Blanking strip grey
KO 4718-26.4: Blanking strip blue

All specifications correspond to the technology used at time of publication.
We reserve the right to make improvements and changes of a technical naturre at any time.

Dimensions

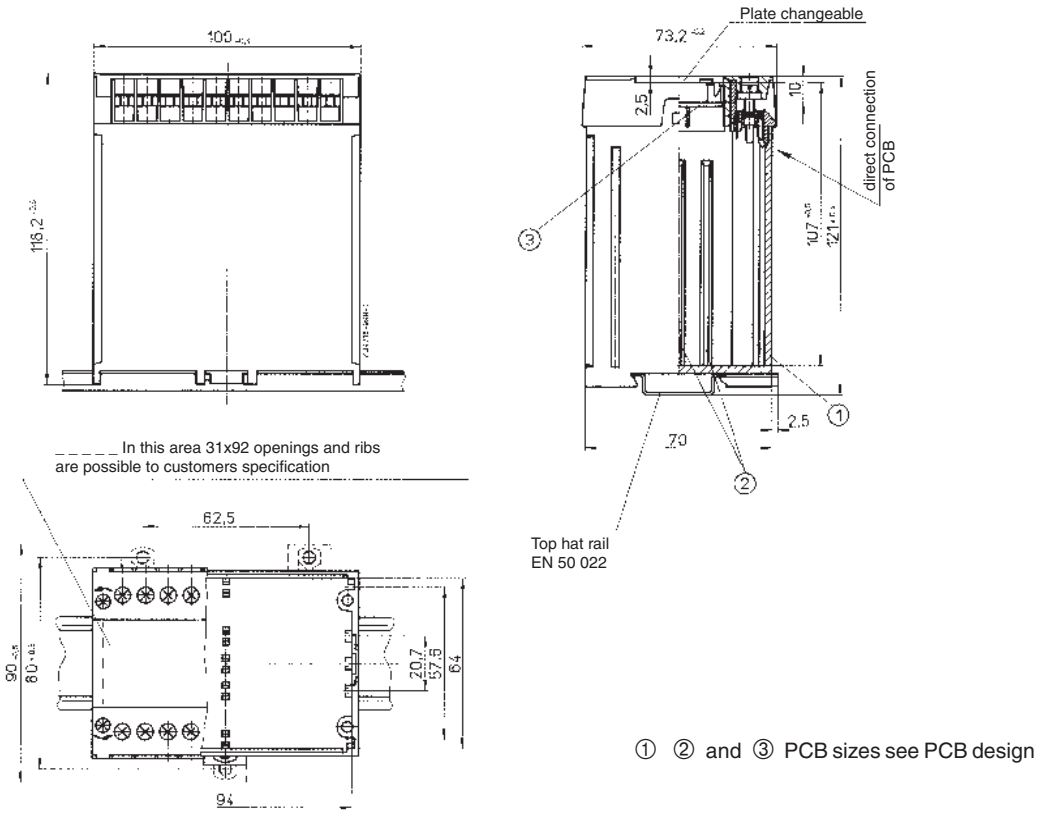

Printed circuit board designs

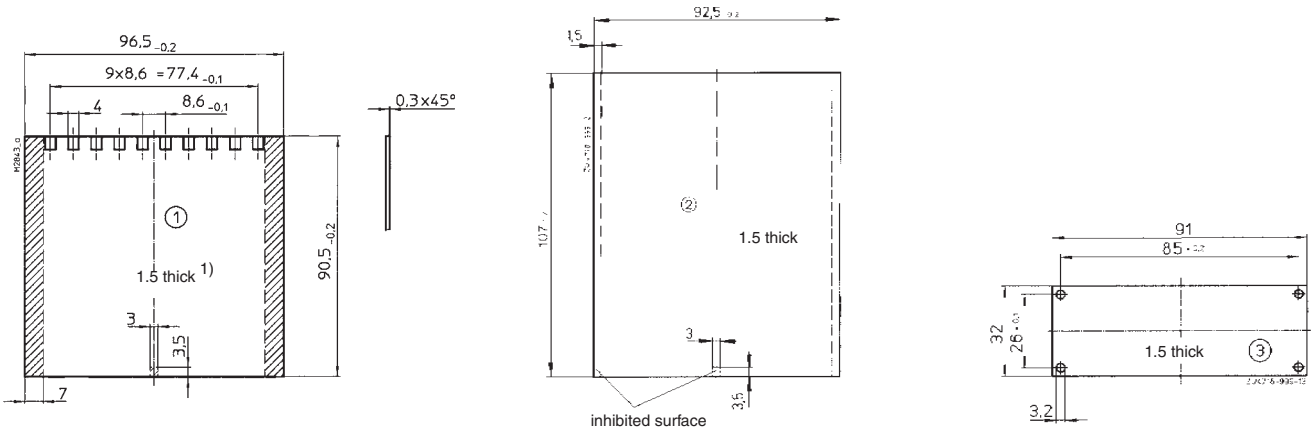

Inhibited surface

1) Tolerance complying with IEC/EN 60249-2-4

Notes on Housing Opening

To remove the front plate first unscrew the terminal strips fixing screws and lift off the terminal strips.

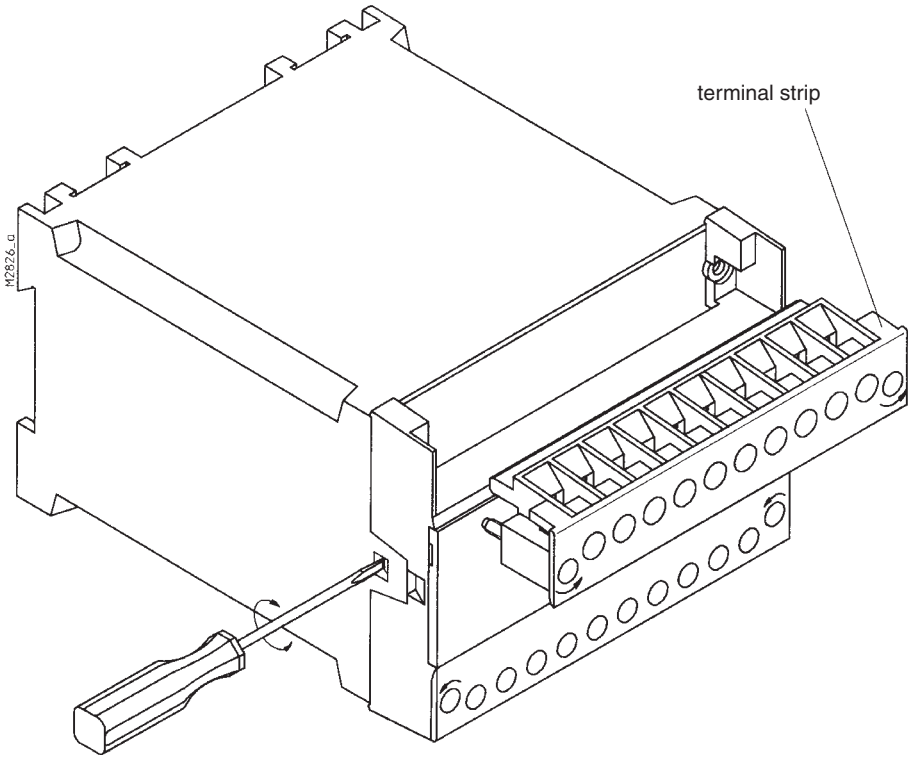

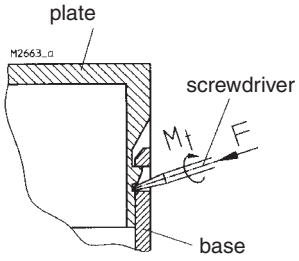

To remove front-frame insert an 0.6 x 4.5 ISO 2380-1 screwdriver into the side recess, on the hood, and turn lightly to the left or right until the snap-in lug disengages. Repeat in the opposite side.