SAFEMASTER STS/K
Safety Switch- And Key Interlock System
Basic Unit SXB01M/K

Translation of the german original

0273975

Presentation in the deactivated condition:
Key removed

STS/K-System Benefits
- EU-Test certificate according to the directive 2006/42/EG, annex IX
- For safety applications up to PLe/Category 4 according to EN ISO 13849-1
- Modular and expandable system
- Rugged composite version of stainless steel and plastic design
- Wireless mechanical safeguarding
- Combines the benefits of safety switch, solenoid locking and key transfer in a single system
- Easy installation through comprehensive accessories
- Protection against lock-in
- Coding level low, medium, high according to DIN EN ISO 14119:2014-03

Features
- The unit is particularly suitable for applications with:
- Full body access (lock-in danger)
- Optional key removal
- Several secured entries
- Rugged ambient conditions
- This unit is also available in stainless steel

Approvals and Markings

CE TÜVRheinland CERTIFIED Product Safety Functional Safety www.tuv.com ID 0600000000

Function

Safety switch (type 2) for separating guards with optional key removal.

Application

To secure separating guards such as safety gates and hoods in machine and plant engineering.

Design and Operation

Attention!

Hazards must be ruled out before the movable part of the guard can be opened!
Optionally, a key can then be removed.

The STS/K switch unit must be integrated into a system and connected with a control unit so that the hazardous machine can only run when the guard is locked and closed.

The key can be removed at any time, whereby hazards must be ruled out immediately. If the access is opened and the actuator is removed from actuator module B/K the key can be removed from key module 01/K. The door is now blocked when open and an escape route is thus secured. Only after the key has been returned to its starting position and the door was then closed can the machine be restarted. Opening of the access is queried by the contacts of actuator monitoring.

SXB01M/K is usually used in the system in connection with additional STS/K units and SAFEMASTER products (e.g. Emergency stop module LG 5925, Softstarter with DC-Brake BL 9228). The key with optional removal can serve as protection against lock-in or for the operating release of these units (e.g. M10BM/K, M11BM/K, M12M/K, M10B01M/K).

Circuit Diagrams

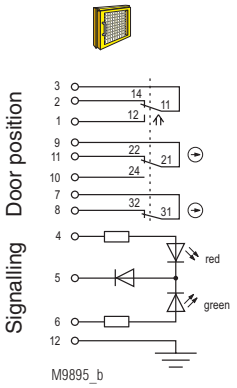

Fig. 1:
Locked while activated:
Actuator and key inserted,
Door closed

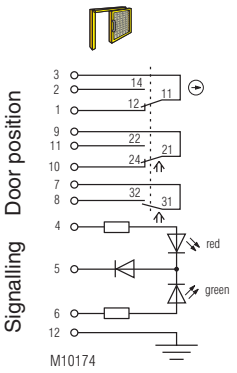

Fig. 2:
Lock deactivated:
Actuator removed
Door open

Switching logic

			Fig. 1	Fig. 2
Door contacts	3	2	■	
	3	1		■
	9	11	■	
	9	10		■
	7	8	■	

■ closed
□ open

Technical Data

Enclosure:	PA + GF
Internal parts and inserting slots:	Stainless steel V4A / AISI 316 / AISI 630
Degree of protection:	IP 65
Temperature range:	- 25 °C to + 40 °C
Storage temperature:	- 25 °C to + 60 °C
Mechanical principle:	Rotating axis with redundant actuator
Connection method:	Cage clamp terminals
min. connection cross-section:	0.25 mm²
max. connection cross-section:	0.75 mm²
Cable entry:	1 x M20 x 1.5
$B10_d$:	2 x 10^6 switching cycles
Electrical service life:	5 x 10^6 switching cycles
Locking force:	min. 2000 N
min. operating speed:	100 mm/s
max. operating speed:	250 mm/s
max. switching frequency:	360/h
Nominal voltage U_N:	AC/DC 24 V
Nominal voltage range:	0.85 ... 1.1 U_N
Power consumption:	0.3 W
Rated impulse voltage:	0.8 kV
Rated insulation voltage:	≤ 50 V
Overvoltage category:	III
Pollution degree:	2
max. operating current:	2 A
Contacts:	1 NC contact, 2 antivalent changeover contacts
Switching principle:	Changeover contact with forced-opening snap-action switch
Utilization category of switching elements	
to AC 15:	1 A
to DC 13:	0.5 A
Short circuit strength, max. fusing:	2 A gG
Rated conditional short circuit current:	1000 A
Contact material:	Ag / $AgSnO_2$
Indicator:	LED red/green, separate selection possible
Test principles:	EN ISO 13849-1:2008 DIN EN ISO 14119:2014-03 EN 60947-5-1:2005 GS-ET-15:02.2011 GS-ET-19:02-2011 GS-ET-31:02-2010
Intended use:	up to max. cat. 4, PL e according to EN ISO 13849-1
Mounting:	according to DIN EN 50041
Contact elements:	IEC EN 60947-5-1 Appendix K
Additional requirement for cat. 4 structure (as single unit):	Add 2nd actuator module, Type SXBB01M/K
Diagnostic coverage (DC), (mechanical):	

Logic and output	**cat. 2**	**cat. 3**	**cat. 4**
SXB01M/K:	90 %	90 %	99 %
SXBB01M/K:	90 %	90 %	99 %

Protection against faults of common cause:	see table in STS design guide
Repair and replacement:	by manufacturer only
Test intervals:	
for PL a to d:	min. once a year
for PL e:	min. once a month

ATTENTION !

To avoid wrong usage (e.g. by overload, mounting position or usage in acid, alkaline or other hostile ambient conditions) the limitations of the product have to be observed. Please check in advance if your application requires the usage of the more robust stainless steel model of SAFEMASTER STS. The requirements of the mounting and operating instruction must be fulfilled.

Ordering Example

STS- SX B 01 M /K

- /K — Plastic
- M — End module M/K
- 01 — Key module 01/K
- B — Actuator module B/K
- SX — Switch module SX/K

Variants and Combination Options

Because of their modular design the basic units of the SAFEMASTER STS/K System can be combined and expanded according to customer requests. This allows for a variety of possible units and functions.

Overview of the basic units

Functions	**Safety switches design type 2**	**Safety switches design type 2 with solenoid lock**	**Mechanical units design type 2**	**Mechanical units with electrical monitoring**	**Mechanical units with electrical release**
Units with standard function	SXBM/K	ZRHBM/K	M10BM/K	RXK01M/K RX10BM/K	YRXKM/K YRXK01M/K
Units with mechanical lock and forced key extraction	SX01BM/K	ZRH01BM/K	M11BM/K	RXK11M/K RX11BM/K	YRX10BM/K YRX11BM/K
Units with optional key extraction	SXB01M/K	ZRHB01M/K	M10B01M/K	RX10B01M/K RX10K01M/K	YRX10B01M/K
Units without actuator	SX01M/K	ZRH01M/K	M12M/K	RX11M/K	YRX11M/K
For additional information refer to the data sheets of the individual modules and other basic units.					

Data sheets

Switching module SX/K
Actuator module B/K
Key module 01/K / 10/K
End module M/K

Info Take advantage of the advice of the **E. DOLD & SÖHNE KG** specialists regarding the choice of units and combination of a system.

Dimensional Drawing [mm]

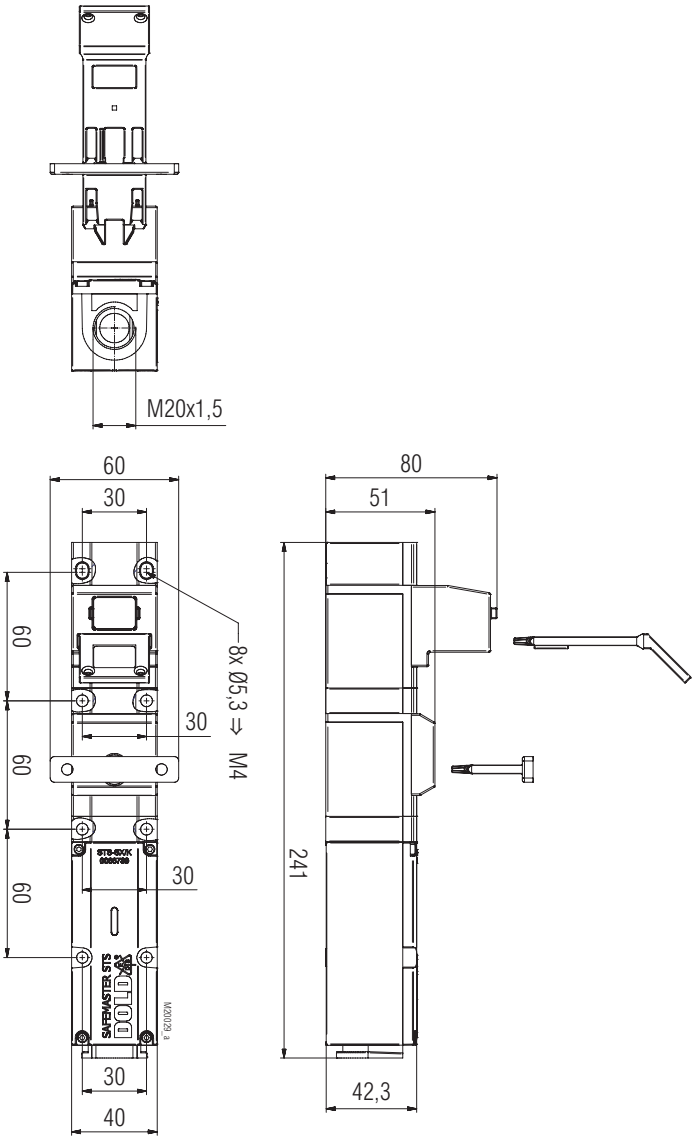

SXB01M/K
Clearance tolerances ± 2%

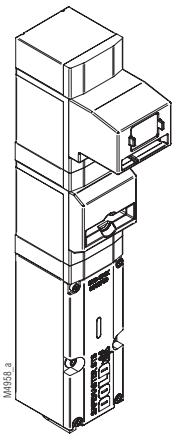

SXB01M/K