BA00368C/07/EN/13.14
71269392

Operating Instructions
Cleanfit COA451

Retractable process assembly

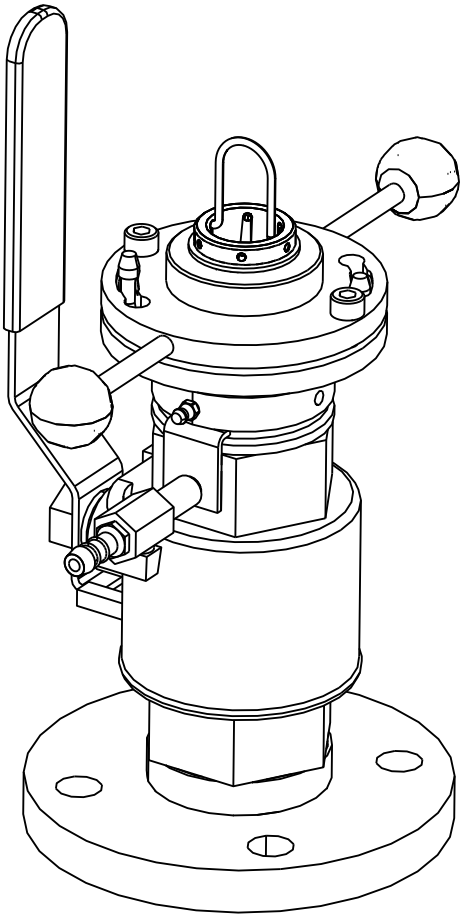

Endress+Hauser
People for Process Automation

Document information

Safety information

The structure, signal words and color coding applied to safety information comply with the requirements of ANSI Z535.6 ("Product safety information in product manuals, instructions and other collateral materials").

Structure of information	Meaning
⚠ DANGER **Cause (/Consequences)** Possible consequences if ignored ▶ Preventive measures	This symbol alerts you to a dangerous situation. If you do not avoid this dangerous situation, it **will** result in death or serious injury.
⚠ WARNING **Cause (/Consequences)** Possible consequences if ignored ▶ Preventive measures	This symbol alerts you to a dangerous situation. If you do not avoid the dangerous situation, it **may** result in death or serious injury.
⚠ CAUTION **Cause (/Consequences)** Possible consequences if ignored ▶ Preventive measures	This symbol alerts you to a dangerous situation. If you do not avoid the dangerous situation, it may result in minor or more serious injuries.
NOTICE **Cause/situation** Possible consequences if ignored ▶ Action/note	This symbol alerts you to situations which may result in damage to property.

Symbols used

ℹ additional information, tip

✔ permitted or recommended

✖ forbidden or not recommended

Table of contents

1 Basic safety instructions 4

1.1 Personnel requirements 4
1.2 Designated use 4
1.3 Workplace safety 4
1.4 Operational safety 4
1.5 Product safety 4

2 Incoming acceptance and product identification 5

2.1 Incoming acceptance 5
2.2 Product identification 5
2.3 Scope of delivery 5

3 Installation 6

3.1 Installation conditions 6
3.2 Installation instructions 9
3.3 Post-installation check 12

4 Operation. 13

4.1 Initial commissioning 13
4.2 Operating elements 13
4.3 Assembly operation 14

5 Maintenance 15

5.1 Cleaning the assembly 15
5.2 Cleaning the sensor 15
5.3 Cleaning agent 15
5.4 Replacing seals 16

6 Troubleshooting 18

6.1 Replacing damaged components 18
6.2 Spare parts kits 19
6.3 Return 21
6.4 Disposal 21

7 Accessories 22

7.1 Accessory kits 22
7.2 Sensors 22
7.3 Welding socket 23

8 Technical data 24

8.1 Environment 24
8.2 Process 24
8.3 Mechanical construction 25

Index. 26

1 Basic safety instructions

1.1 Personnel requirements

- Installation, commissioning, operation and maintenance of the measuring system may be carried out only by specially trained technical personnel.
- The technical personnel must be authorized by the plant operator to carry out the specified activities.
- The electrical connection may be performed only by an electrical technician.
- The technical personnel must have read and understood these Operating Instructions and must follow the instructions contained therein.
- Measuring point faults may be rectified only by authorized and specially trained personnel.

Repairs not described in the Operating Instructions provided may only be carried out directly by the manufacturer or by the service organization.

1.2 Designated use

The manually operated Cleanfit COA451 retractable assembly is designed for the installation of oxygen sensors in tanks and pipelines.
Its mechanical construction means that it can be operated in pressurized systems (see Technical data).

Use of the device for any purpose other than that described, poses a threat to the safety of people and of the entire measuring system and is therefore not permitted.
The manufacturer is not liable for damage resulting from improper or non-designated use.

1.3 Workplace safety

As the user, you are responsible for complying with the following safety conditions:
- Regulations for explosion protection (Ex devices only)
- Installation guidelines
- Local standards and regulations

1.4 Operational safety

- Before commissioning the entire measuring point, verify that all connections are correct. Ensure that electrical cables and hose connections are not damaged.
- Do not operate damaged products, and safeguard them to ensure that they are not operated inadvertently. Mark the damaged product as defective.
- If faults cannot be rectified, the products must be taken out of service and secured against unintentional commissioning.

1.5 Product safety

The product is designed to meet state-of-the-art safety requirements, has been tested and left the factory in a condition in which it is safe to operate.
The relevant regulations and European standards have been observed.

2 Incoming acceptance and product identification

2.1 Incoming acceptance

- Verify that the packaging is not damaged.
- Notify your supplier of any damage to the packaging. Keep the damaged packaging until the matter has been settled.
- Verify that the contents are not damaged.
- Notify your supplier of any damage to the delivery contents. Hold on to the damaged goods until the matter has been settled.
- Check the delivery for completeness. Check it against the delivery papers and your order.
- Pack the product for storage and transportation in such a way that it is protected against impact and moisture. The original packaging offers the best protection. Furthermore, the permitted ambient conditions must also be observed (see "Technical data").
- If you have any questions, please contact your supplier or your local sales center.

2.2 Product identification

2.2.1 Nameplate

You can find the following information on the nameplate:
- Manufacturer details
- Order code
- Extended order code
- Serial number
- Operating conditions
- Safety information symbols

Compare the order code on the nameplate with your order.

2.2.2 Product identification

To establish your device version, enter the order code from the nameplate into the search field at the following address:
www.products.endress.com/order-ident

2.3 Scope of delivery

The scope of delivery comprises:
- Ordered version of the assembly
- Operating Instructions in English

If you have any questions, please contact your supplier or your local sales center.

3 Installation

3.1 Installation conditions

3.1.1 Dimensions

Assembly with G2 thread and weld-in adapter in measuring position (long and short stroke)

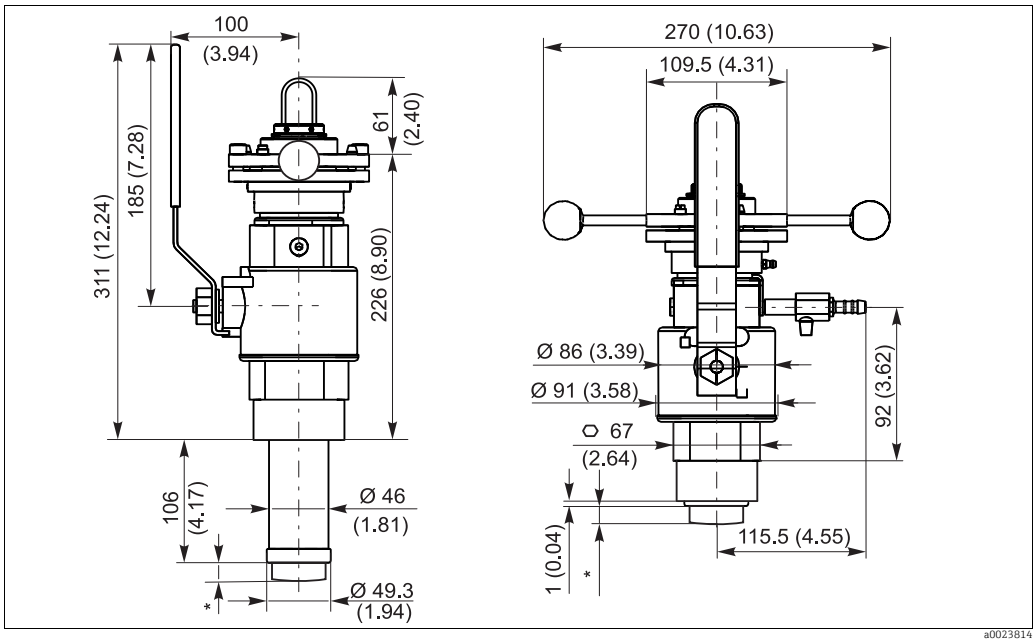

Fig. 1: Dimensions in mm (inch)

Assembly with G2 thread and weld-in adapter in service position (long and short stroke)

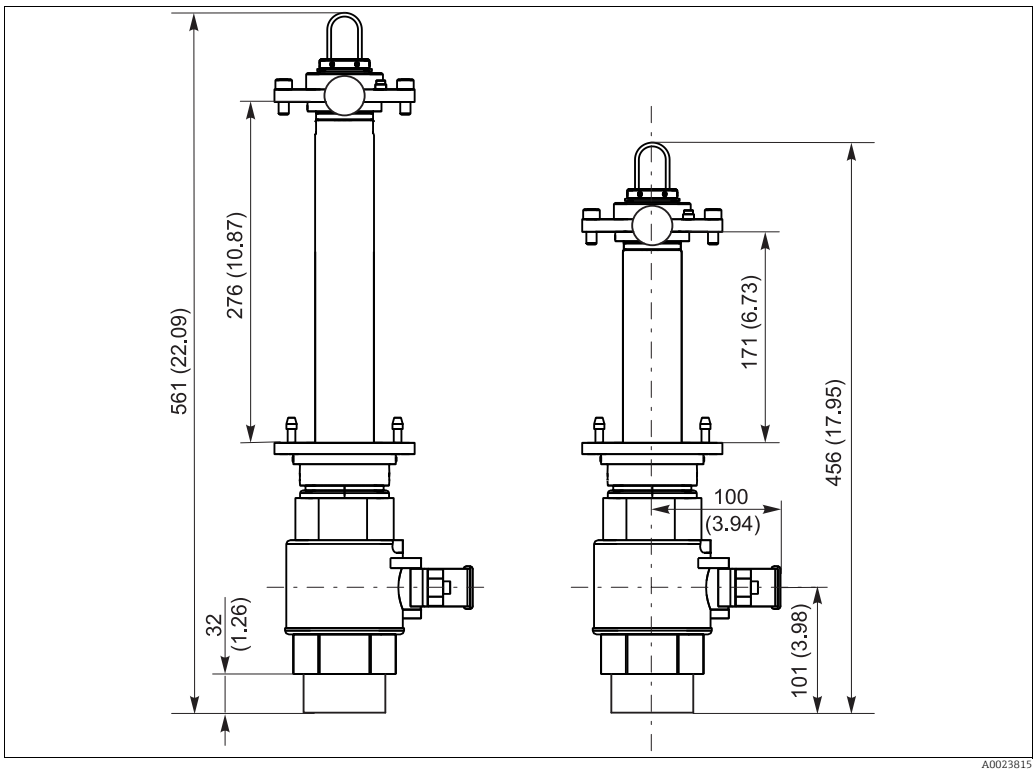

Fig. 2: Dimensions in mm (inch)

Assembly with flange connection

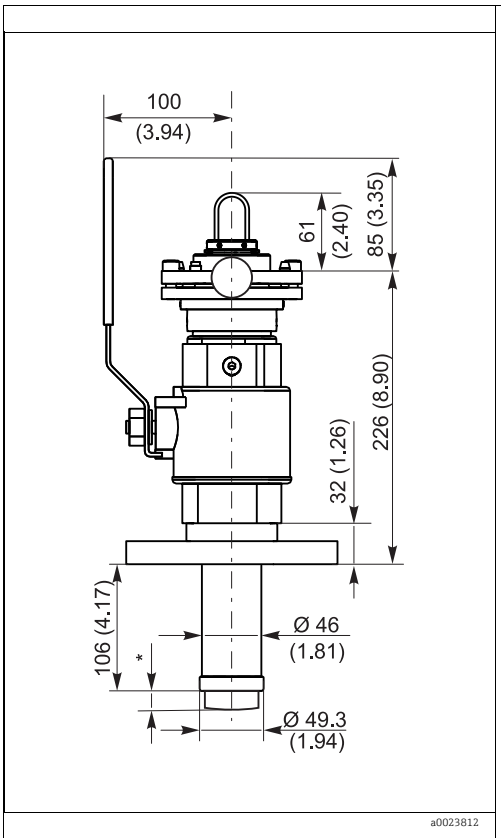

Fig. 3: Dimensions in mm (inch)

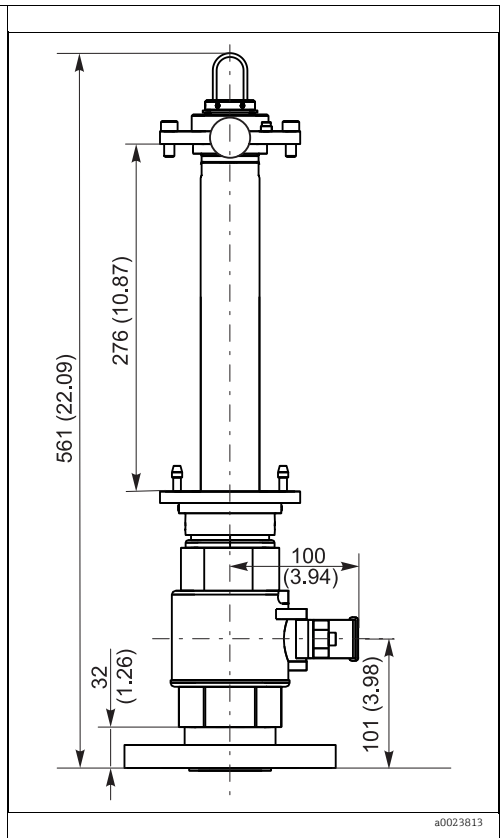

Fig. 4: Dimensions in mm (inch)

** Dimensions depend on sensor:*

COS41:	*9 mm (0.35")*
COS51D:	*9 mm (0.35")*
COS61/61D:	*8 mm (0.31")*

Additional space of 350 mm (13.8") is required to install and remove the sensor.

3.1.2 Process connections

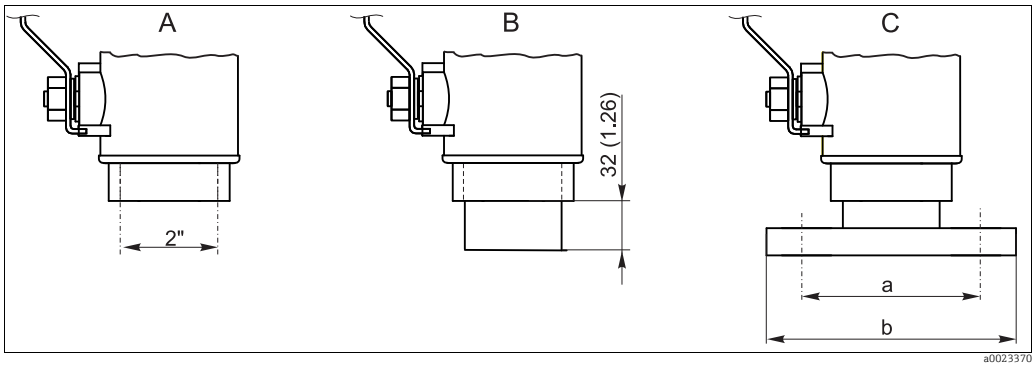

Fig. 5: Process connections. Dimensions in mm (inch)

A Internal thread G2
B Internal thread G2 with weld-in adapter
C Flange DN 50 / PN 16 (as per EN 1092-1) and flange ANSI 2" / 150 lbs
a: DN 50: Ø 125 (4.92), ANSI 2": Ø 120.7 (4.75)
b: DN 50: Ø 165 (6.50), ANSI 2": Ø 152.4 (6.00)

3.1.3 Installation instructions

The assembly is designed for installation on vessels and pipes. Suitable nozzles must be available for this. The minimum pipe diameter is DN 80.

Installation location

The following figure illustrates various installation positions in pipes and indicates whether they are permitted or not.

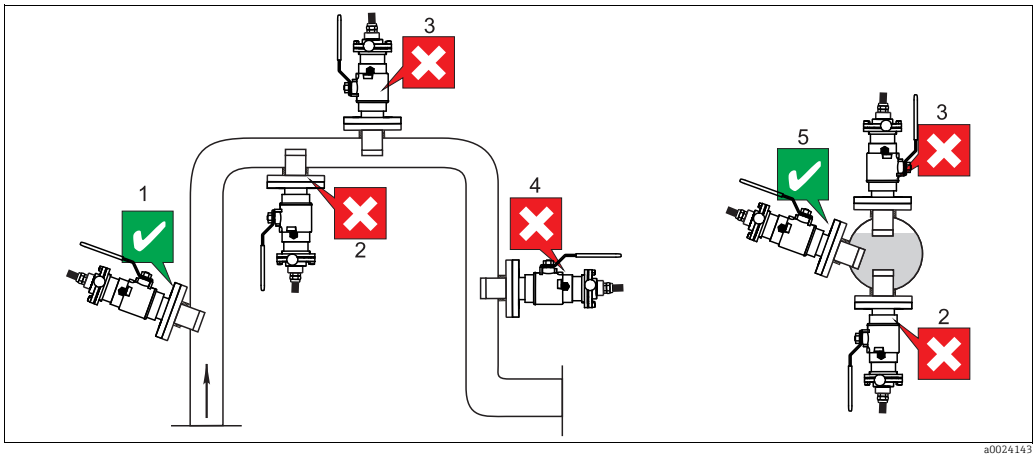

Fig. 6: Orientations and installation positions (with retractable assembly CPA451)

- Install the sensor in places with uniform flow conditions.
- The best installation location is in the ascending pipe (item 1). Installation is also possible in the horizontal pipe (item 5).
- Do not install the sensor in places where air may collect or foam bubbles form (item 3) or where suspended particles may settle (item 2).
- Avoid installation in the down pipe (item 4).
- Avoid installations downstream of pressure reduction steps that can result in outgassing.
- Measuring errors can occur, if:
  - the sensor is not immersed into the medium
  - suspended particles are settled on the sensor membrane
  - the sensor is installed overhead.

Orientations

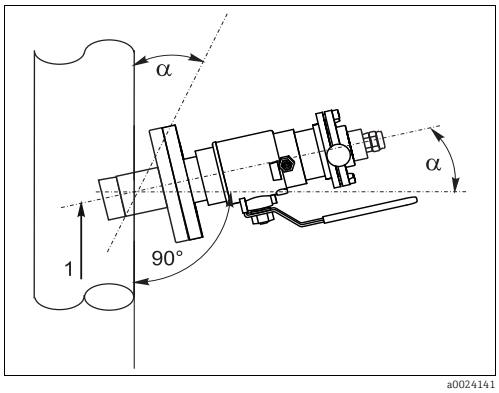

Fig. 7: Ascending pipe and tank side installation

α min 15°
1 Medium flow direction

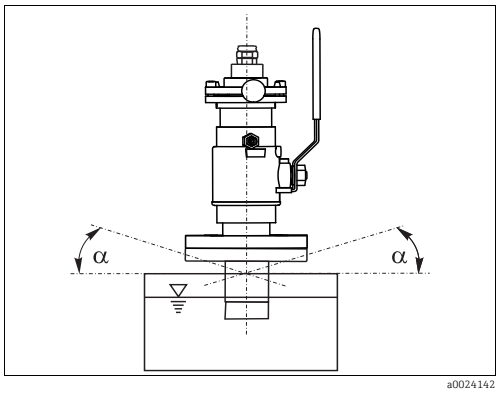

Fig. 8: Tank top installation

α min 15°, recommended 90°

Be sure to avoid a siphon effect at the rinse chamber outlet. The inflow to the rinse chamber is always from below.

3.2 Installation instructions

3.2.1 Measuring system

A complete measuring system comprises:
- Cleanfit COA451 assembly
- Oxymax COS41, COS51D, COS61 or COS61D oxygen sensor
- Liquiline CM44x or Liquisys M COM223/253 transmitter

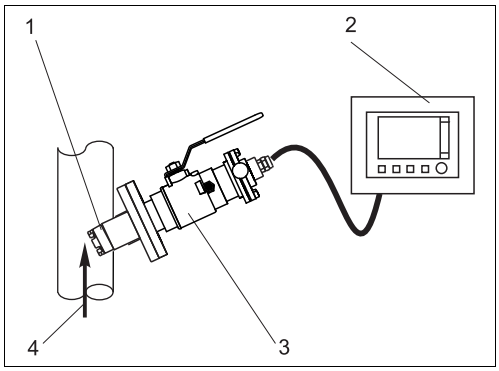

Fig. 9: Measuring system with COS51D or COS61D

1 *Oxygen sensor COS51D or COS61D*
2 *Liquiline CM44x multichannel transmitter*
3 *Cleanfit COA451 retractable assembly*
4 *Flow direction of the medium*

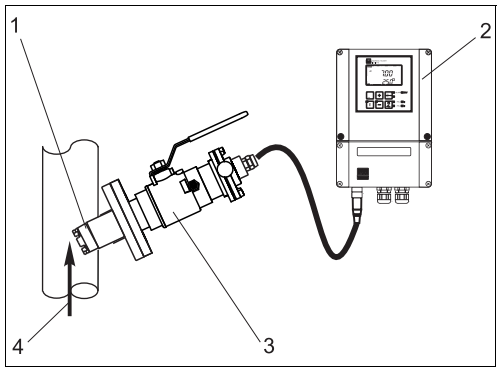

Fig. 10: Measuring system with COS41 or COS61

1 *Oxygen sensor COS41 or COS61*
2 *Liquisys COM223/253*
3 *Cleanfit COA451 retractable assembly*
4 *Flow direction of the medium*

3.2.2 Installing the assembly in the process

Mount the hand lever (item 1) on the assembly.
Set the assembly to the "Service" position (retraction pipe inserted into the assembly) and secure the assembly to the vessel or pipe using your selected process connection.

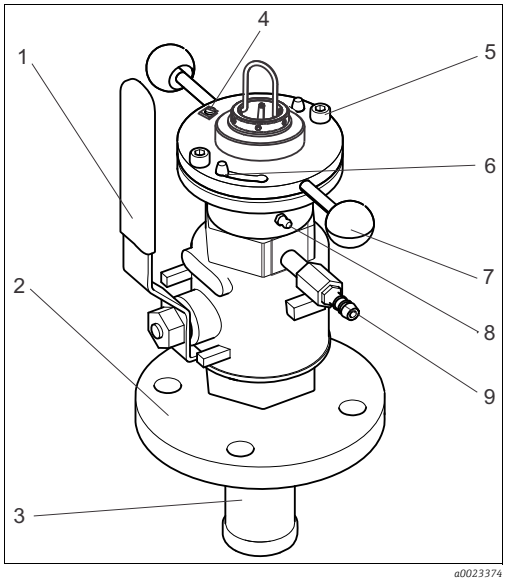

Fig. 11: Assembly in operational state (ball valve open)

1 *Hand lever for opening/closing the ball valve*
2 *Process connection (flange DN 50 / PN 16; example)*
3 *Retraction pipe*
4 *Terminal for potential equalization*
5 *Securing screws*
6 *Bayonet lock*
7 *Handles*
8 *Grease nipple*
9 *Ball valve for venting or rinse connection*

For flange process connection:
Prior to installation, check the flange seal between the flanges.
For G2 process connection:
Use a commercially available sealing agent (e.g. LOCTITE 561) to seal the G2 process connection.

3.2.3 Rinse water connection (optional)

You can rinse the sensor in the service position with a second ball valve for the rinse chamber (see accessories).

1. Connect the rinse water pipe to the rinse nozzle provided. The two rinse nozzles on the assembly are identical. Use one as the inlet and the other as the outlet.
2. Operate the rinse water connection of the assembly with a water pressure of 2 bar to max. 6 bar (29 to 87 psi).
3. Also install a check valve and a dirt trap (100 µm, see "Accessories") in the water pipe (at the inlet to the assembly).

Apart from water you can also pass other or additional cleaning solutions through the rinse chamber. When doing so, pay attention to the material resistance of the assembly and comply with the maximum permitted temperatures and pressures.

NOTICE

Water pressure too high

The assembly can be damaged.

- A pressure-reducing valve must be connected in series upstream if the water pressure can increase to above 6 bar (87 psi).

3.2.4 Sensor installation

You require the following tools to install the sensor:

- Allen key 2.5 mm
- Allen key 6 mm

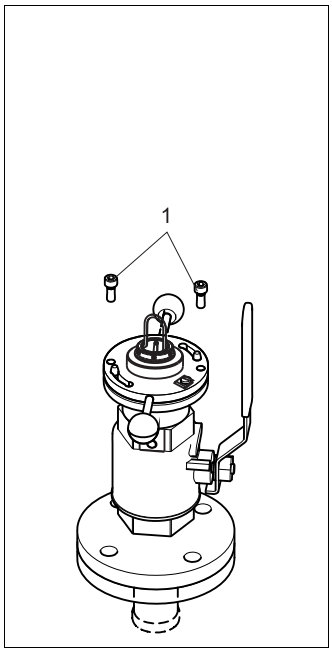

a0023823

Fig. 12:

1 Securing screws

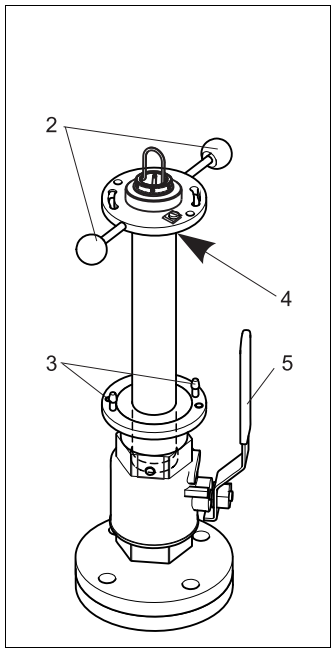

a0023824

Fig. 13:

2 Handles
3 Bayonet lock
4 Grub screw
5 Hand lever

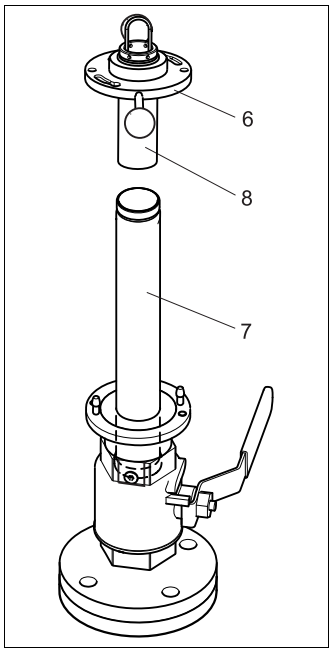

a0023825

Fig. 14:

6 Bayonet nut
7 Retraction pipe
8 Sensor holder

1. Loosen the securing screws (item 1) and place them in a safe place within reach.
2. Release the bayonet lock (→ 13) and taking the handles pull out the retraction pipe (item 7) together with the sensor holder (item 8) as far as possible.
3. Close the ball valve! To do so, push down the hand lever (item 5) as far as it will go (only possible in one direction!).
   When the ball valve is closed the assembly is sealed off from the process.

⚠ CAUTION

Risk of injury from medium and high pressure in the rinse chamber

▶ Connect a hose to the vent valve and carefully vent the rinse chamber before you continue.

4. Release the grub screw (item 4) on the underside of the bayonet nut.
5. Unscrew the bayonet nut (→ 14) and the sensor holder (item 8) from the retraction pipe by holding the retraction pipe tight (item 7) and turning the handles counterclockwise (approx. 9 rotations).
6. Now pull the handles to remove the bayonet nut, along with the sensor holder, from the retraction pipe.

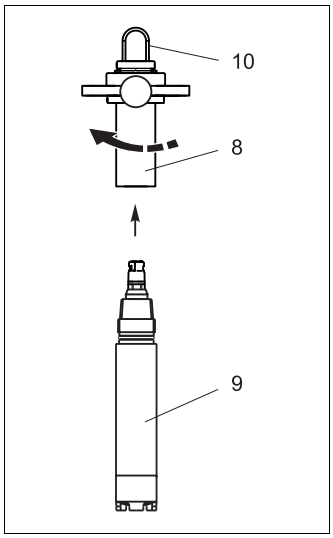

a0024566

Abb. 15:

8 Sensor holder
9 Sensor
10 Bracket

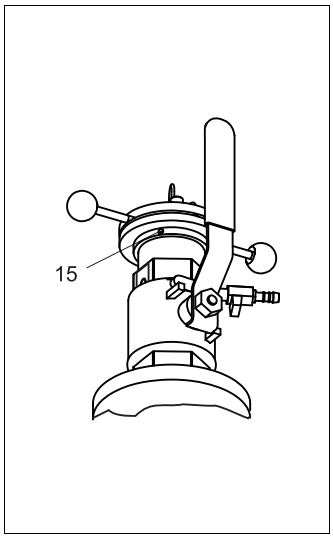

a0023828

Fig. 16:

15 Fixing screws (2 screws, only one is visible in the graphic)

7. Screw the sensor (→ 15, item 9) firmly into the internal thread of the sensor holder.
8. Fit the mounted sensor into the retraction pipe, hold the retraction pipe steady and tighten the bayonet nut (turn handles clockwise).
9. Tighten the grub screw of the bayonet nut.
10. Close the rinse chamber connection.
11. Open the ball valve and push the retraction pipe in the direction of the process as far as it will go. This is easier if you grease the retraction pipe somewhat. See the information in the "Maintenance" section.
12. Lock the bayonet lock and secure the retraction pipe using the securing screws.
13. Slacken the two screws (→ 16). Turn the entire top assembly part around its own axis until the sensor is in the right position in relation to the medium flow. Secure this position by tightening the two screws again until the assembly part cannot turn any more.

3.3 Post-installation check

- Following installation, check all the connections to ensure that they are properly secured and sealed.
- Ensure that the hoses for the (optional) rinse water connections cannot be removed without effort.
  These pipes are in open contact with the medium and must be secured accordingly.
- Check the hoses for damage.

4 Operation

4.1 Initial commissioning

Prior to initial commissioning, ensure that:
- all seals are correctly seated (on the assembly and on the process connection)
- the sensor is correctly installed and connected
- the water connection at the rinse connections is correct (if present).

⚠ WARNING

If process medium leaks out, there is a risk of injury due to high pressure, high temperature or chemicals.
- ▶ Before subjecting the assembly to process pressure, verify that all connections are sealed!
- ▶ If you use a shutoff valve on the rinse chamber as a vent cock, the dummy plug on the outlet side of the rinse chamber must not be removed! Otherwise the assembly may **not** be introduced into the process!

4.2 Operating elements

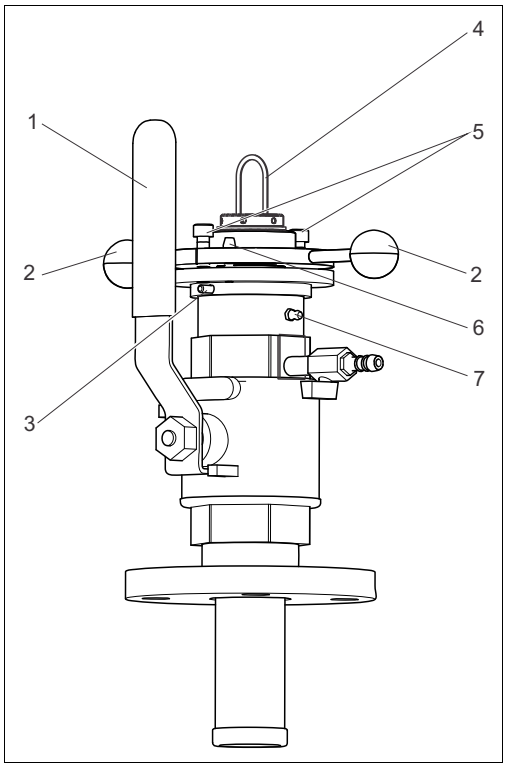

Fig. 17: Operating elements

1 Hand lever
2 Handles
3 Fixing screw(s) (grub screw)
4 Bracket
5 Securing screws
6 Stop lock bolt of the bayonet lock
7 Grease nipple

You have the following options for operation:
- Hand lever
  This opens and closes the ball valve.
- Stop lock bolt and screws
  This locks the retraction pipe in the "Measure" position.
- Handles
  You change the alignment of the sensor in the process by turning the top part of the assembly around its own axis by the handles (bayonet lock engaged, securing screws screwed in and fixing screws released).
- Fixing screws
  These lock the top part of the assembly in the desired position.
- Bracket
  The bracket has a marking on one side. This enables you to identify the position of the sensor when installing the sensor in the assembly (see "Sensor installation" section).
- Grease nipple
  You can grease parts of the retraction pipe here (see "Maintenance" section).

4.3 Assembly operation

⚠ CAUTION

High pressure can cause injury

- ▶ You can only operate the retractable assembly manually up to a pressure of 2 bar (29 psi)! If the process pressure is higher, you must switch off the process before moving the assembly!
- ▶ Never release the securing screws at process pressures over 2 bar (29 psi)!
- ▶ At process pressures up to 2 bar (29 psi), make sure that the bayonet lock does not open when you release the securing screws, as otherwise there is the danger that the pressure could cause the screws to "shoot out" uncontrollably!
- ▶ Always use an Allen key to release and lock the screws and hold the Allen key in your hand from the first turn of the screw to the last. In this way you have control of the screws.
- ▶ Always lock the sensor holder with the bayonet lock **and** securing screws! Otherwise the sensor holder could exit in an uncontrolled manner as a result of the process pressure and injure someone.

Moving from the "Service" position to the "Measure" position

1. Check that the rinse chamber connections are closed.
2. Open the ball valve.
3. Push the sensor holder as far as possible in the direction of the process.
4. Lock the sensor holder using the bayonet lock and the securing screws. This prevents the sensor holder from returning inadvertently to the "Service" position.
5. If necessary, turn the top part of the assembly around its own axis by the handles in order to align the sensor. Lock the desired position with the fixing screws.

Moving from the "Measure" position to the "Service" position

1. Loosen the securing screws with an Allen key.
2. Open the bayonet lock.
3. Pull out the sensor holder as far as it will go ("Service" position).
4. Close the ball valve.
5. Vent the rinse chamber.
6. Perform the required service activities.

5 Maintenance

⚠ WARNING

Risk of injury if medium escapes

- ▶ Before each maintenance activity, verify that the process piping and the tank are unpressurized, empty and have been rinsed.
- ▶ Move the assembly to the "Service" position and close the ball valve.

5.1 Cleaning the assembly

To ensure stable and reliable measurements, the assembly and the sensor must be cleaned regularly. The regularity and intensity of the cleaning depend on the medium.

All parts in contact with the medium, such as the sensor and the sensor guide, must be cleaned regularly. To do so, you must remove the sensor[1].

- Low levels of contamination are removed using suitable cleaning agents (see "Cleaning agent" section).
- High levels of contamination are removed using a soft brush and a suitable cleaning agent.
- For contamination that is difficult to remove, soak the parts in a cleaning solution. Then clean the parts using a brush.

ℹ A typical example of a cleaning interval would be 6 months in the case of drinking water.

Grease the retraction pipe to ensure the assembly moves in and out smoothly. SYNTHESO GLEP 1 (from Klüber) is a suitable grease. If working in the food industry, PARALIQ GTE 703 (from Klüber) is suitable. Also grease the area between the O-rings with the aid of the grease nipple.

5.2 Cleaning the sensor

You must clean the sensor:

- before each calibration
- regularly during operation
- before returning it for repair

You can remove the sensor and clean it manually, or you can clean it in automatic mode[2] using the rinse water connection.

NOTICE

Incorrect measurement or damage to sensor due to incorrect cleaning

- ▶ Do not use abrasive cleaning agents. These may cause irreparable damage to the sensor.
- ▶ After the sensor has been cleaned, rinse the assembly's rinse chamber using an ample quantity of water. Otherwise, the residue from the cleaning agent may distort the measurement.
- ▶ If necessary, carry out a new calibration following cleaning.

5.3 Cleaning agent

The choice of cleaning agent depends on the degree and type of contamination. The most common types of contamination and the appropriate cleaning agents can be found in the following table.

1) same as sensor installation, but in reverse order
2) only if the assembly is fitted out accordingly

Type of contamination	Cleaning agent
Grease and oils	(Alkaline) media containing surfactants or water-soluble organic solvents (halogen-free, e.g. ethanol)
Limescale, metal hydroxide coatings, sparingly soluble biofilms	approx. 3% hydrochloric acid
Sulfide deposits	Mixture of 3% hydrochloric acid and thiocarbamide (commercially available)
Protein-based coatings	Mixture of 3% hydrochloric acid and pepsin (commercially available)
Fibers, suspended solids	Pressurized water, possibly surfactants
Thin biofilms	Pressurized water

⚠ CAUTION

Health hazard due to solvents

▶ Do not use any halogen-containing, organic solvents or acetone. These solvents may destroy plastic components of the sensor and are also suspected of causing cancer (e.g. chloroform).

5.4 Replacing seals

- Keep the sealing surfaces of the assembly dirt-free.
- Remove buildup from time to time.
- If leaks are discovered, contact your Endress+Hauser sales office.

You can replace the seals shows in → 18. The seals are available as an accessory kit, see the "Accessories" section

To replace the seals in the assembly, you must interrupt the process and remove the assembly completely.

⚠ CAUTION

Risk of injury due to residual medium and elevated temperatures

▶ When handling parts which are in contact with the medium, protect yourself from residual medium and elevated temperatures. Wear protective gloves and glasses.

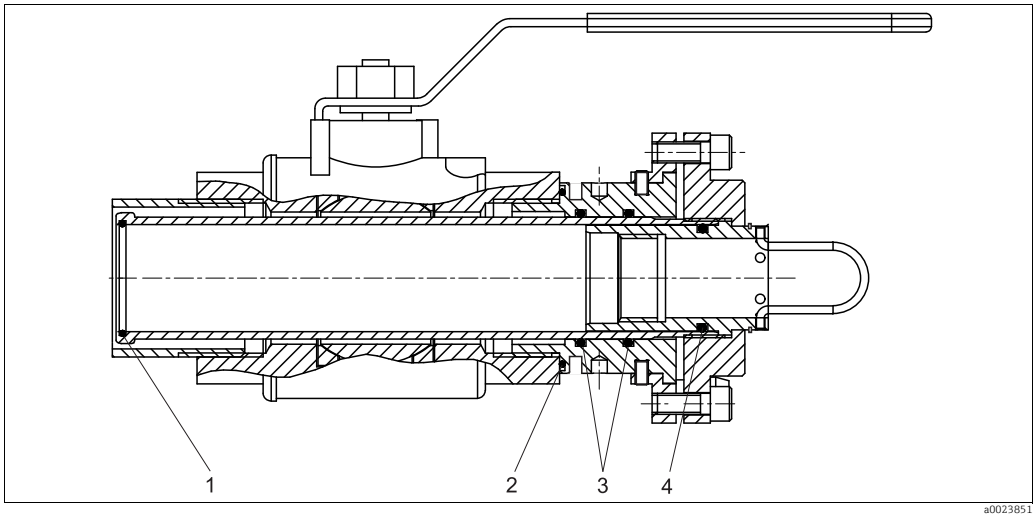

Fig. 18: Seals

1 O-ring Viton, retraction pipe
2 O-ring Viton, between ball valve and bottom part of bayonet lock
3 O-rings Viton, bottom part of bayonet lock
4 O-ring Viton, sensor holder

You require the following materials and tools:
- Teflon tape
- Grease (e.g. SYNTHESO GLEP 1 or PARALIQ GTE 703)
- Allen key 2.5 mm
- Allen key 6 mm
- Adjustable open-ended wrench (up to 45 mm)
- Open-ended wrench set (only for flange connection)
- Snap ring pliers
- Adjustable pin wrench DIN 1810 B, size 68 to 75

Disassembling the assembly

1. Switch off the process and empty the piping or the container.
2. Slacken both
   securing screws.
3. Open the bayonet lock.
4. Drive the assembly to the "Service" position.
5. Separate the assembly from the process connection (welding neck or flange).
6. Release the grub screw on the underside of the bayonet nut.
7. Unscrew the bayonet nut and the sensor holder from the retraction pipe by holding the retraction pipe tight and turning the handles counterclockwise (approx. 9 rotations).
8. Now pull the handles to remove the bayonet nut, along with the sensor holder, from the retraction pipe.
9. Wrap a few layers of Teflon tape around the thread of the retraction pipe. This protects the seals from damage when inserting and removing the retraction pipe.
10. Press the retraction pipe downwards out of the ball valve.
11. Using snap ring pliers, remove the snap ring above the bayonet nut.
12. Remove the bayonet nut from the sensor holder.
13. Only when replacing the O-ring, item 2 (→ 18): unscrew the vent cock (with safety bracket).
14. Only when replacing the O-ring, item 2: using a sickle spanner unscrew the bottom part of the bayonet lock.

You can now access the seals.

Replacing the seals and assembling the assembly

1. Lightly grease the O-rings (e.g. with Syntheso Glep 1).
2. Replace the seals (O-rings).
3. If you have not already done so, wrap a few layers of Teflon tape around the thread of the retraction pipe. This protects the seals from damage when inserting the retraction pipe.
4. Grease the retraction pipe (see "Maintenance" section).
5. Reassemble the assembly. Remove the Teflon tape once you have inserted the retraction pipe.
6. Check for leaks before bringing the assembly back to the "Measuring" position.

6 Troubleshooting

6.1 Replacing damaged components

⚠ CAUTION

Pressure safety is compromised

Risk of injury due to medium escaping and elevated temperature

- Damage to the assembly, which compromises pressure safety, must be repaired **only** by authorized and qualified personnel.
- Following each repair and maintenance task, the assembly must be checked for leaks using appropriate procedures. Following this, the assembly must again comply with the specifications in the technical data.

Replace all other damaged components immediately. To order accessories and spare parts, use the "Accessories" and "Spare parts" sections or contact your local Endress+Hauser sales office.

6.2 Spare parts kits

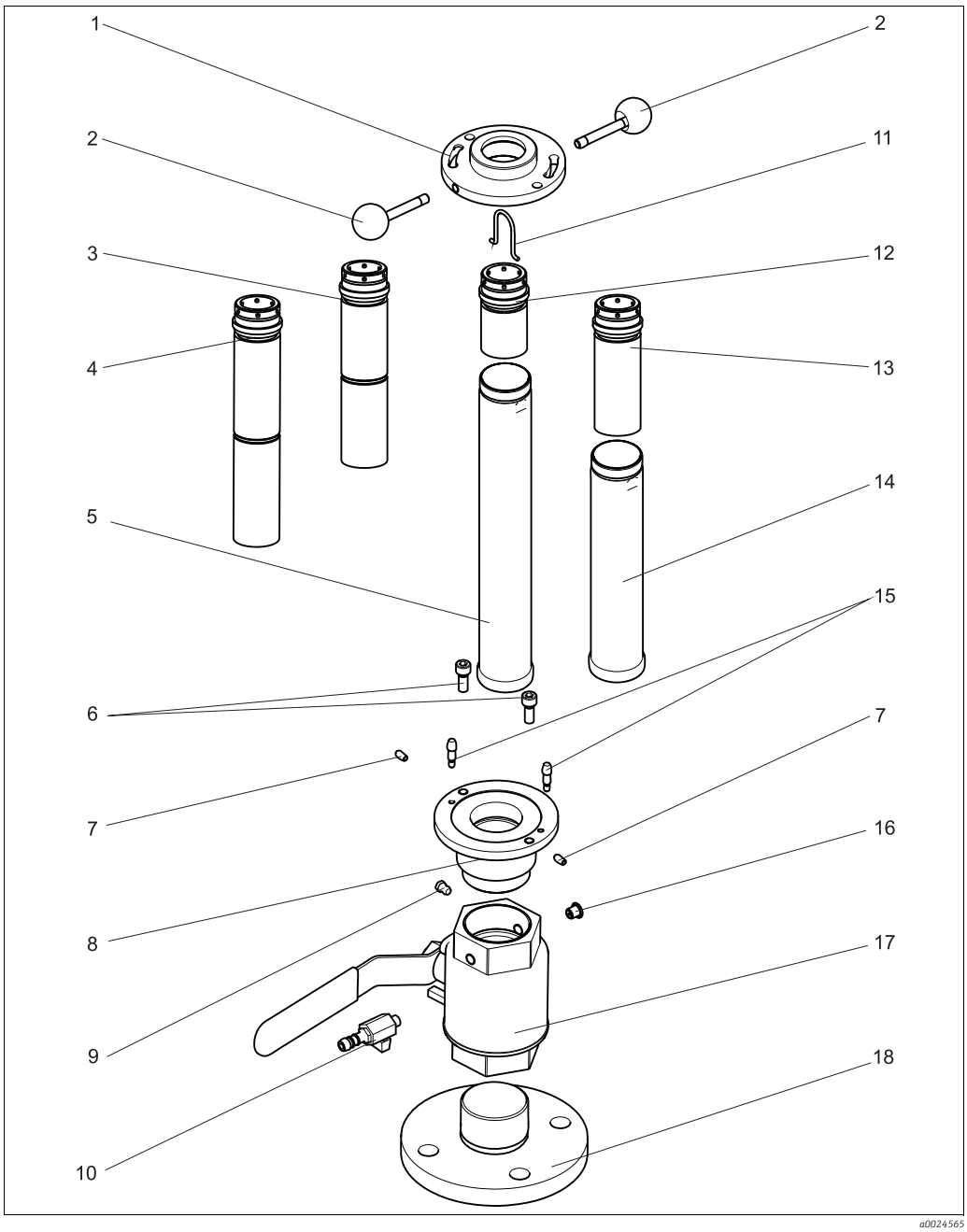

Fig. 19: Spare parts

The bayonet lock nut (item 1) and dummy plug (item 16) are not available as a spare part.

The sensor holders are used to adapt the length of the different sensors to a standard installation length. To distinguish between the individual sensor holders, their lengths are listed in the following table.

Item No.	Designation and content	Order number Spare parts kit
2	Ball handle with bolts 2 of each	51513168
3	Sensor holder for COS61 / COS61D(incl. Viton O-ring and snap ring) For assembly version: – long stroke, length: 178 mm (7.01")	51513164
4	Sensor holder for COS41 / COS51D(incl. Viton O-ring and snap ring) For assembly version: – long stroke, length: 221 mm (8.70")	51513167
5	Retraction pipe (incl. FPM O-ring) For assembly version: – long stroke	51513158
6, 7, 9, 11, 15	Kit: – Bracket (11), 5 pcs. – Allen key M8 x 20 (6), 10 pcs. – Stop bolt (15), 2 pcs. – Grub screws (7), 10 pcs. – Grease nipple H1 M6x1 (9)	51513169
8, 17	Ball valve (17): Without process connection, with G2 internal thread and bottom part of bayonet lock (8) with Viton O-rings	51513159
8, 17, 18	Ball valve (17): With flange DN 50, welding adapter (18) and bottom part of bayonet lock (8) with Viton O-rings	51513154
	Ball valve (17): With flange ANSI 2", welding adapter (18) and bottom part of bayonet lock (8) with Viton O-rings	51513155
10	Ball valve for rinse chamber as rinse connection or venting, hose connection OD 9	51512982
12	Sensor holder for COS61 / COS61D (incl. Viton O-ring and snap ring) For assembly version: – short stroke, length: 73 mm (2.87")	51513163
13	Sensor holder for COS41 / COS51D (incl. Viton O-ring and snap ring) For assembly version: – short stroke, length: 116 mm (4.57")	51513166
14	Retraction pipe (incl. FPM O-ring) For assembly version: – long stroke	51513156

6.3 Return

The product must be returned if it is in need of repair or a factory calibration, or if the wrong product was ordered or delivered. Legal specifications require Endress+Hauser, as an ISO-certified company, to follow certain procedures when handling all returned products that have been in contact with the medium.

To ensure that your device is returned swiftly, safely and in an appropriate manner, please read the procedures and conditions on the Endress+Hauser website at www.services.endress.com/return-material

6.4 Disposal

The ball valve, sensor holder and other parts must be disposed of separately, based on the material they are made of.
Please observe local regulations.

7 Accessories

7.1 Accessory kits

Ball valve for rinse chamber
- As rinse connection complementing or replacing the venting ball cock supplied;
- Order No. 51512982

O-ring set
- Viton + FPM
- Order No. 51512981

7.2 Sensors

Oxymax COS41
- Oxygen sensor for drinking water and wastewater measurements, amperometric principle
- Material: POM
- Order as per product structure, www.products.endress.com/cos41
- Technical Information TI00284C/07/EN

Oxymax COS51D
- Amperometric sensor for dissolved oxygen, with Memosens technology
- Order as per product structure, www.products.endress.com/cos51d
- Technical Information TI00413C/07/EN

Oxymax COS61 and COS61D
- Optical oxygen sensor for drinking water and wastewater measurements, fluorescence quenching principle
- With or without Memosens protocol
- Order as per product structure, www.products.endress.com/cos61 or www.products.endress.com/cos61d
- Technical Information TI00387C/07/EN

7.3 Welding socket

Welding socket

- Welding socket for pipe diameter from 80 mm, with combination flange DN 50 / ANSI 2":
  - Bores for flange DN 50: 4 x 90° Ø18 on bolt circle Ø125 (4.92)
  - Bores for flange ANSI 2": 4 x 90° Ø19 on bolt circle Ø121 (4.75)
- Flange seal, 4 screws M16x60, 4 nuts M16 incl. washers,
- Stainless steel 1.4571 (AISI 316 Ti)
- Order No. 50080249

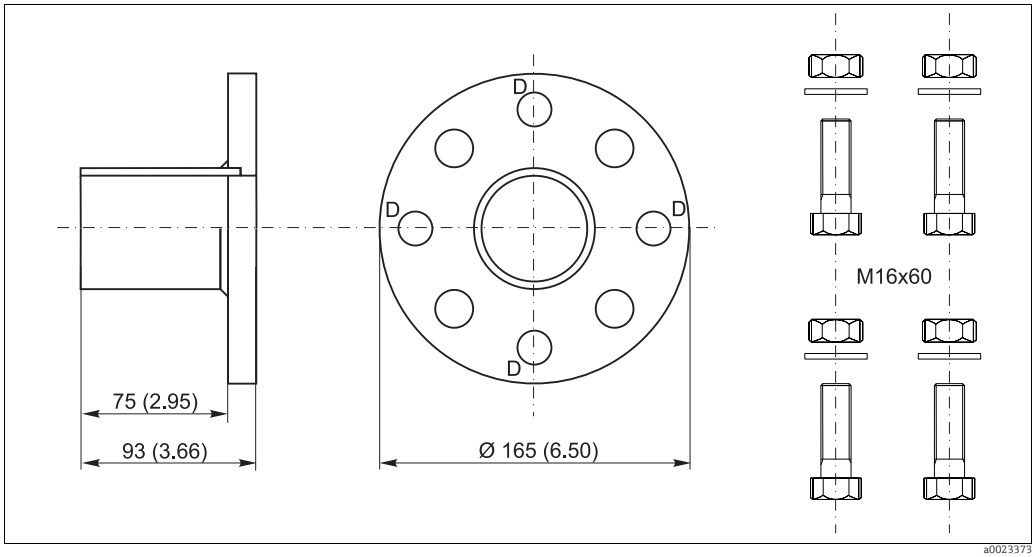

Fig. 20: Welding socket, dimensions in mm (inch)

D: Markings for bores, flange DN 50

Welding nipple

- Welding nipple for 2" thread
- Stainless steel 1.4404 (AISI 316L)
- Order No. 71265347

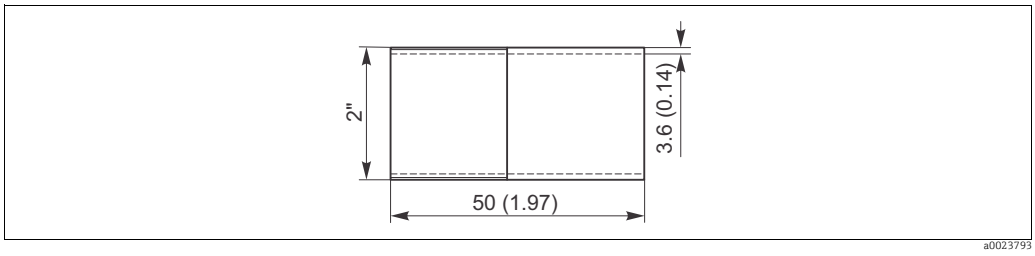

Fig. 21: Welding nipple, dimensions in mm (inch)

8 Technical data

8.1 Environment

Ambient temperature range

0 to 50 °C (32 to 122 °F)

8.2 Process

Medium pressure

Max. 10 bar (145 psi)

For manual insertion/retraction of the assembly the medium pressure may not exceed 2 bar (29 psi)!
Also take the process conditions of the sensor used into consideration!

Medium temperature

0 to 80 °C (32 to 176 °F)

Take the maximum medium temperature for the sensor into consideration!

Pressure-temperature ratings

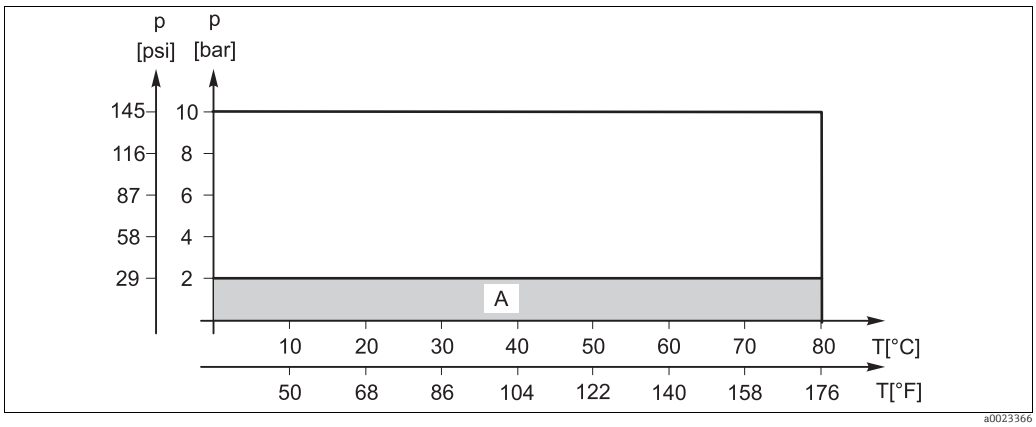

Fig. 22: Pressure-temperature ratings

A Range in which the assembly can be operated manually

8.3 Mechanical construction

Design, dimensions	See "Installation" section	
Weight	Depending on version: 8 to 11 kg (17.6 to 24.3 lbs)	
Materials	Wetted:	Viton (seals) Stainless steel 1.4404 (AISI 316L) Nickel-plated brass (vent cock or rinse connection)
	Not wetted:	Stainless steel 1.4404 (AISI 316L)
Rinse connection nozzles	2 x G1/8 (internal) Connection options: – 2 x ball valve with hose connection OD 9 mm (see "Accessories") (A ball valve is included in the delivery for the assembly. On its own it acts as a vent cock.) – Customer's own rinse connections with G1/8 external thread	
Vent cock	Ball valve with hose connection OD 9 mm	

Index

A
Accessories . . . 22
  Kits . . . 22
  Sensors . . . 22
  Welding socket . . . 23

C
Check
  Installation . . . 12
Cleaning
  Assembly . . . 15
  Cleaning agent . . . 15
  Sensor . . . 15
Cleaning interval . . . 15
Connection
  Process . . . 7
  Rinse water . . . 10

D
Designated use . . . 4
Dimensions . . . 6
Disposal . . . 21

F
Faults . . . 18

G
Grease nipple . . . 13

I
Incoming acceptance . . . 5
Initial commissioning . . . 13
Installation . . . 6
  Check . . . 12
  Installation instructions . . . 8
  Installation location . . . 8
  Orientations . . . 8
  Process . . . 9
  Sensor . . . 11
Installation instructions . . . 9

M
Maintenance . . . 15
Maintenance interval . . . 15
Measuring . . . 14
Measuring system . . . 9
Mechanical construction . . . 25
Mode
  Measuring . . . 14
  Service . . . 14

N
Nameplate . . . 5

O
Operating elements . . . 13
Operation
  Manual . . . 14
Operational safety . . . 4

P
Personnel requirements . . . 4
Product safety . . . 4

R
Replacing
  Damaged parts . . . 18
  Seals . . . 16
Retractable pipe . . . 11
Rinse water connection . . . 10

S
Scope of delivery . . . 5
Seals . . . 16
Sensor
  Cleaning . . . 15
  Installation . . . 11
Sensor holder . . . 11, 15
Sensors . . . 22
Service . . . 14
Spare parts . . . 19
Splash protection cap . . . 11
Stop lock bolt . . . 11, 13

T
Technical data . . . 24–25

U
Use . . . 4

W
Welding socket . . . 23
Workplace safety . . . 4

71269392

www.addresses.endress.com

Endress+Hauser

People for Process Automation