BA01216D/06/EN/01.14
71254382

Valid as of version
01.00.zz (Device firmware)

Operating Instructions
Proline Prowirl D 200 FOUNDATION Fieldbus

Vortex flowmeter

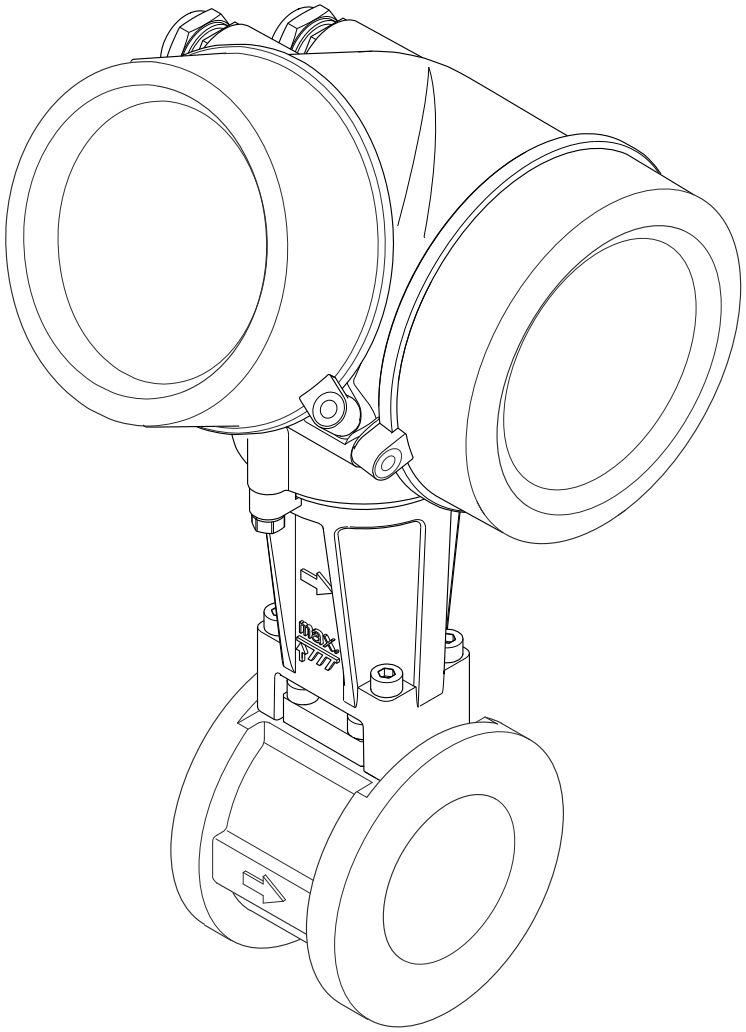

Endress+Hauser
People for Process Automation

- Make sure the document is stored in a safe place such that it is always available when working on or with the device.
- To avoid danger to individuals or the facility, read the "Basic safety instructions" section carefully, as well as all other safety instructions in the document that are specific to working procedures.
- The manufacturer reserves the right to modify technical data without prior notice. Your Endress+Hauser Sales Center will supply you with current information and updates to these Instructions.

Table of contents

1 Document information 6
1.1 Document function 6
1.2 Symbols used 6
1.2.1 Safety symbols 6
1.2.2 Electrical symbols 6
1.2.3 Tool symbols 7
1.2.4 Symbols for certain types of information 7
1.2.5 Symbols in graphics 7
1.3 Documentation 8
1.3.1 Standard documentation 8
1.3.2 Supplementary device-dependent documentation 8
1.4 Registered trademarks 8

2 Basic safety instructions 9
2.1 Requirements for the personnel 9
2.2 Designated use 9
2.3 Workplace safety 10
2.4 Operational safety 10
2.5 Product safety 10
2.6 IT security 10

3 Product description 11
3.1 Product design 11

4 Incoming acceptance and product identification 12
4.1 Incoming acceptance 12
4.2 Product identification 12
4.2.1 Transmitter nameplate 13
4.2.2 Sensor nameplate 14
4.2.3 Symbols on measuring device 16

5 Storage and transport 17
5.1 Storage conditions 17
5.2 Transporting the product 17
5.3 Packaging disposal 18

6 Installation 19
6.1 Installation conditions 19
6.1.1 Mounting position 19
6.1.2 Requirements from environment and process 22
6.1.3 Special mounting instructions 24
6.2 Mounting the measuring device 24
6.2.1 Required tools 24
6.2.2 Preparing the measuring device 25
6.2.3 Mounting the sensor 25
6.2.4 Mounting the transmitter of the remote version 26
6.2.5 Turning the transmitter housing 27
6.2.6 Turning the display module 28
6.3 Post-installation check 28

7 Electrical connection 29
7.1 Connection conditions 29
7.1.1 Required tools 29
7.1.2 Requirements for connecting cable . . . 29
7.1.3 Terminal assignment 31
7.1.4 Shielding and grounding 32
7.1.5 Requirements for the supply unit 33
7.1.6 Preparing the measuring device 34
7.2 Connecting the measuring device 34
7.2.1 Connecting the transmitter 34
7.2.2 Connecting the remote version 36
7.3 Special connection instructions 40
7.3.1 Connection examples 40
7.4 Ensuring the degree of protection 40
7.5 Post-connection check 41

8 Operation options 42
8.1 Overview of operation options 42
8.2 Structure and function of the operating menu 43
8.2.1 Structure of the operating menu 43
8.2.2 Operating philosophy 44
8.3 Access to the operating menu via the local display 44
8.3.1 Operational display 44
8.3.2 Navigation view 45
8.3.3 Editing view 47
8.3.4 Operating elements 49
8.3.5 Opening the context menu 49
8.3.6 Navigating and selecting from list . . . 51
8.3.7 Calling the parameter directly 51
8.3.8 Calling up help text 52
8.3.9 Changing the parameters 53
8.3.10 User roles and related access authorization 54
8.3.11 Disabling write protection via access code 54
8.3.12 Enabling and disabling the keypad lock 54
8.4 Access to the operating menu via the operating tool 55
8.4.1 Connecting the operating tool 56
8.4.2 Field Xpert SFX350, SFX370 57
8.4.3 FieldCare 57
8.4.4 AMS Device Manager 58
8.4.5 Field Communicator 475 58

9 System integration 59
9.1 Overview of device description files 59
9.1.1 Current version data for the device . . . 59

9.1.2 Operating tools 59
9.2 Integration into a FOUNDATION Fieldbus network 60
9.2.1 Block model 60
9.2.2 Assignment of the measured values in the function blocks 60
9.2.3 Index tables of Endress+Hauser parameters 62
9.2.4 Methods 62

10 Commissioning 64

10.1 Function check 64
10.2 Switching on the measuring device 64
10.3 Setting the operating language 64
10.4 Configuring the measuring device 65
10.4.1 Defining the tag name 65
10.4.2 Setting the system units 66
10.4.3 Selecting and setting the medium . . . 69
10.4.4 Configuring the analog inputs 71
10.4.5 Configuring the local display 71
10.4.6 Configuring the low flow cut off 73
10.5 Advanced settings 75
10.5.1 Setting the medium properties 76
10.5.2 Performing external compensation . . 81
10.5.3 Carrying out a sensor adjustment 82
10.5.4 Configuring the pulse/frequency/switch output 82
10.5.5 Configuring the totalizer 90
10.5.6 Carrying out additional display configurations 91
10.6 Configuration management 93
10.6.1 Function scope of the "'Configuration management" parameter" parameter 94
10.7 Simulation 94
10.8 Protecting settings from unauthorized access 96
10.8.1 Write protection via access code 96
10.8.2 Write protection via write protection switch 97
10.8.3 Write protection via block operation 99
10.9 Configuring the measuring device via FOUNDATION Fieldbus 100
10.9.1 Block configuration 100
10.9.2 Scaling the measured value in the Analog Input Block 101

11 Operation 103

11.1 Reading device locking status 103
11.2 Adjusting the operating language 103
11.3 Configuring the display 103
11.4 Reading measured values 103
11.4.1 Process variables 103
11.4.2 Totalizer 105
11.4.3 Output values 105
11.5 Adapting the measuring device to the process conditions 106
11.6 Performing a totalizer reset 106
11.7 Showing data logging 107

12 Diagnostics and troubleshooting . . 109

12.1 General troubleshooting 109
12.2 Diagnostic information on local display 111
12.2.1 Diagnostic message 111
12.2.2 Calling up remedial measures 112
12.3 Diagnostic information in FieldCare 113
12.3.1 Diagnostic options 113
12.3.2 Calling up remedy information 114
12.4 Adapting the diagnostic information 114
12.4.1 Adapting the diagnostic behavior . . . 114
12.4.2 Adapting the status signal 114
12.5 Overview of diagnostic information 118
12.6 Pending diagnostic events 121
12.7 Diagnostic messages in the DIAGNOSTIC Transducer Block 122
12.8 Diagnostic list 122
12.9 Event logbook 123
12.9.1 Event history 123
12.9.2 Filtering the event logbook 123
12.9.3 Overview of information events 123
12.10 Resetting the measuring device 124
12.11 Device information 124
12.12 Firmware history 125

13 Maintenance 127

13.1 Maintenance tasks 127
13.1.1 Exterior cleaning 127
13.1.2 Interior cleaning 127
13.1.3 Replacing seals 127
13.2 Measuring and test equipment 127
13.3 Endress+Hauser services 127

14 Repair 128

14.1 General notes 128
14.2 Spare parts 128
14.3 Endress+Hauser services 129
14.4 Return 129
14.5 Disposal 129
14.5.1 Removing the measuring device 129
14.5.2 Disposing of the measuring device . . 129

15 Accessories 130

15.1 Device-specific accessories 130
15.1.1 For the transmitter 130
15.1.2 For the sensor 131
15.2 Communication-specific accessories 131
15.3 Service-specific accessories 131
15.4 System components 132

16 Technical data 133

16.1 Application 133
16.2 Function and system design 133
16.3 Input 133

16.4 Output 139
16.5 Power supply 144
16.6 Performance characteristics 146
16.7 Installation 149
16.8 Environment 149
16.9 Process 150
16.10 Mechanical construction 150
16.11 Operability 156
16.12 Certificates and approvals 158
16.13 Application packages 159
16.14 Accessories 160
16.15 Supplementary documentation 160

17 Appendix 162

17.1 Endress+Hauser FOUNDATION Fieldbus Parameter 162
17.1.1 Resource Block 2 162
17.1.2 Transducer Block Advanced Setup . . 167
17.1.3 Transducer Block Diagnostic 175
17.1.4 Transducer Block Display 186
17.1.5 Transducer Block Expert 190
17.1.6 Transducer Block Expert Info 192
17.1.7 Transducer Block Heartbeat 194
17.1.8 Transducer Block Heartbeat Results 1 196
17.1.9 Transducer Block Heartbeat Results 2 201
17.1.10 Transducer Block Heartbeat Results 3 206
17.1.11 Transducer Block Heartbeat Results 4 212
17.1.12 Transducer Block HistoROM 217
17.1.13 Transducer Block Service Info 221
17.1.14 Transducer Block Service Sensor . . . 225
17.1.15 Transducer Block Setup 228
17.1.16 Transducer Block Total Inventory Counter 231
17.2 Overview of the operating menu 233
17.2.1 "Operation" menu 233
17.2.2 "Setup" menu 234
17.2.3 "Diagnostics" menu 242
17.2.4 "Expert" menu 247

Index 270

1 Document information

1.1 Document function

These Operating Instructions contain all the information that is required in various phases of the life cycle of the device: from product identification, incoming acceptance and storage, to mounting, connection, operation and commissioning through to troubleshooting, maintenance and disposal.

1.2 Symbols used

1.2.1 Safety symbols

Symbol	Meaning
DANGER	**DANGER!** This symbol alerts you to a dangerous situation. Failure to avoid this situation will result in serious or fatal injury.
WARNING	**WARNING!** This symbol alerts you to a dangerous situation. Failure to avoid this situation can result in serious or fatal injury.
CAUTION	**CAUTION!** This symbol alerts you to a dangerous situation. Failure to avoid this situation can result in minor or medium injury.
NOTICE	**NOTE!** This symbol contains information on procedures and other facts which do not result in personal injury.

1.2.2 Electrical symbols

Symbol	Meaning
⎓	**Direct current** A terminal to which DC voltage is applied or through which direct current flows.
~	**Alternating current** A terminal to which alternating voltage is applied or through which alternating current flows.
⎓ ~	**Direct current and alternating current** ▪ A terminal to which alternating voltage or DC voltage is applied. ▪ A terminal through which alternating current or direct current flows.
⏚	**Ground connection** A grounded terminal which, as far as the operator is concerned, is grounded via a grounding system.
⊜	**Protective ground connection** A terminal which must be connected to ground prior to establishing any other connections.
⏚	**Equipotential connection** A connection that has to be connected to the plant grounding system: This may be a potential equalization line or a star grounding system depending on national or company codes of practice.

1.2.3 Tool symbols

Symbol	Meaning
	Flat blade screwdriver
	Allen key
	Open-ended wrench

1.2.4 Symbols for certain types of information

Symbol	Meaning
	Permitted Indicates procedures, processes or actions that are permitted.
	Preferred Indicates procedures, processes or actions that are preferred.
	Forbidden Indicates procedures, processes or actions that are forbidden.
	Tip Indicates additional information.
	Reference to documentation Refers to the corresponding device documentation.
	Reference to page Refers to the corresponding page number.
	Reference to graphic Refers to the corresponding graphic number and page number.
1. , 2. , 3. ...	**Series of steps**
	Result of a sequence of actions
	Help in the event of a problem
	Visual inspection

1.2.5 Symbols in graphics

Symbol	Meaning
1, 2, 3,...	Item numbers
1. , 2. , 3. ...	Series of steps
A, B, C, ...	Views
A-A, B-B, C-C, ...	Sections
 A0013441	Flow direction
 A0011187	**Hazardous area** Indicates a hazardous area.
 A0011188	**Safe area (non-hazardous area)** Indicates the non-hazardous area.

1.3 Documentation

For an overview of the scope of the associated Technical Documentation, refer to the following:
- The CD-ROM provided for the device (depending on the device version, the CD-ROM might not be part of the delivery!)
- The *W@M Device Viewer* : Enter the serial number from the nameplate (www.endress.com/deviceviewer)
- The *Endress+Hauser Operations App*: Enter the serial number from the nameplate or scan the 2-D matrix code (QR code) on the nameplate.

For a detailed list of the individual documents along with the documentation code

1.3.1 Standard documentation

Document type	Purpose and content of the document
Technical Information	**Planning aid for your device** The document contains all the technical data on the device and provides an overview of the accessories and other products that can be ordered for the device.
Brief Operating Instructions	**Guide that takes you quickly to the 1st measured value** The Brief Operating Instructions contain all the essential information from incoming acceptance to initial commissioning.

1.3.2 Supplementary device-dependent documentation

Additional documents are supplied depending on the device version ordered: Always comply strictly with the instructions in the supplementary documentation. The supplementary documentation is an integral part of the device documentation.

1.4 Registered trademarks

FOUNDATION™ Fieldbus
Registration-pending trademark of the Fieldbus Foundation, Austin, Texas, USA

KALREZ ®, VITON ®
Registered trademarks of DuPont Performance Elastomers L.L.C., Wilmington, DE USA

GYLON®
Registered trademark of Garlock Sealing Technologies, Palmyar, NY, USA

Applicator®, FieldCare®, Field Xpert™, HistoROM®, Heartbeat Technology™
Registered or registration-pending trademarks of the Endress+Hauser Group

2 Basic safety instructions

2.1 Requirements for the personnel

The personnel for installation, commissioning, diagnostics and maintenance must fulfill the following requirements:
- Trained, qualified specialists must have a relevant qualification for this specific function and task
- Are authorized by the plant owner/operator
- Are familiar with federal/national regulations
- Before beginning work, the specialist staff must have read and understood the instructions in the Operating Instructions and supplementary documentation as well as in the certificates (depending on the application)
- Following instructions and basic conditions

The operating personnel must fulfill the following requirements:
- Being instructed and authorized according to the requirements of the task by the facility's owner-operator
- Following the instructions in these Operating Instructions

2.2 Designated use

Application and media
Depending on the version ordered, the measuring device can also measure potentially explosive, flammable, poisonous and oxidizing media.

Measuring devices for use in hazardous areas, in hygienic applications or in applications where there is an increased risk due to process pressure, are labeled accordingly on the nameplate.

To ensure that the measuring device remains in proper condition for the operation time:
- Only use the measuring device in full compliance with the data on the nameplate and the general conditions listed in the Operating Instructions and supplementary documentation.
- Based on the nameplate, check whether the ordered device is permitted for the intended use in the hazardous area (e.g. explosion protection, pressure vessel safety).
- Use the measuring device only for media against which the process-wetted materials are adequately resistant.
- If the measuring device is not operated at atmospheric temperature, compliance with the relevant basic conditions specified in the associated device documentation is absolutely essential: "Documentation" section (→ 🖹 8).

Incorrect use
Non-designated use can compromise safety. The manufacturer is not liable for damage caused by improper or non-designated use.

⚠ WARNING

Danger of breakage of the sensor due to corrosive or abrasive fluids!
- Verify the compatibility of the process fluid with the sensor material.
- Ensure the resistance of all fluid-wetted materials in the process.
- Observe the specified pressure and temperature range.

Verification for borderline cases:
- For special fluids and fluids for cleaning, Endress+Hauser is glad to provide assistance in verifying the corrosion resistance of fluid-wetted materials, but does not accept any warranty or liability as minute changes in the temperature, concentration or level of contamination in the process can alter the corrosion resistance properties.

Residual risks

Possible burn hazard due to fluid temperatures!
- ▶ For elevated fluid temperature, ensure protection against contact to prevent burns.

2.3 Workplace safety

For work on and with the device:
- ▶ Wear the required personal protective equipment according to federal/national regulations.

For welding work on the piping:
- ▶ Do not ground the welding unit via the measuring device.

If working on and with the device with wet hands:
- ▶ It is recommended to wear gloves on account of the higher risk of electric shock.

2.4 Operational safety

Risk of injury.
- ▶ Operate the device in proper technical condition and fail-safe condition only.
- ▶ The operator is responsible for interference-free operation of the device.

Conversions to the device

Unauthorized modifications to the device are not permitted and can lead to unforeseeable dangers.
- ▶ If, despite this, modifications are required, consult with Endress+Hauser.

Repair

To ensure continued operational safety and reliability,
- ▶ Carry out repairs on the device only if they are expressly permitted.
- ▶ Observe federal/national regulations pertaining to repair of an electrical device.
- ▶ Use original spare parts and accessories from Endress+Hauser only.

2.5 Product safety

This measuring device is designed in accordance with good engineering practice to meet state-of-the-art safety requirements, has been tested, and left the factory in a condition in which it is safe to operate.

It meets general safety standards and legal requirements. It also complies with the EC directives listed in the device-specific EC Declaration of Conformity. Endress+Hauser confirms this by affixing the CE mark to the device.

2.6 IT security

We only provide a warranty if the device is installed and used as described in the Operating Instructions. The device is equipped with security mechanisms to protect it against any inadvertent changes to the device settings.

IT security measures in line with operators' security standards and designed to provide additional protection for the device and device data transfer must be implemented by the operators themselves.

3 Product description

3.1 Product design

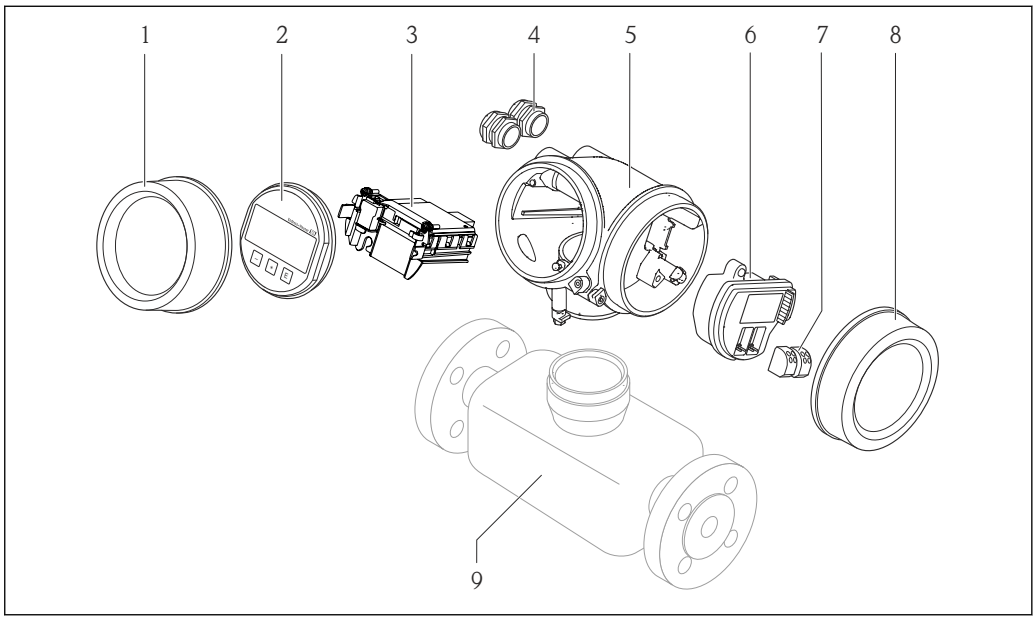

1 *Important components of a measuring device*

1 *Electronics compartment cover*
2 *Display module*
3 *Main electronics module*
4 *Cable glands*
5 *Transmitter housing (incl. HistoROM)*
6 *I/O electronics module*
7 *Terminals (spring loaded terminals, pluggable)*
8 *Connection compartment cover*
9 *Sensor*

4 Incoming acceptance and product identification

4.1 Incoming acceptance

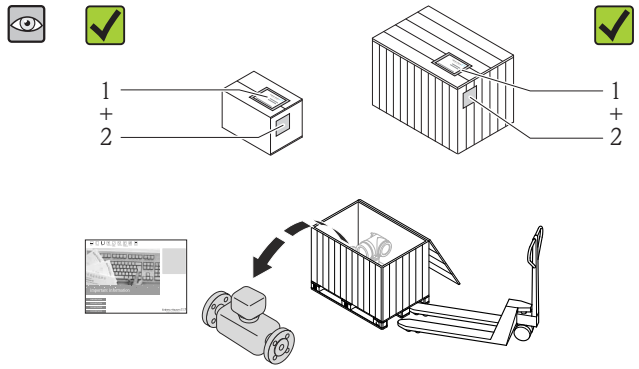

Are the order codes on the delivery note (1) and the product sticker (2) identical?

Are the goods undamaged?

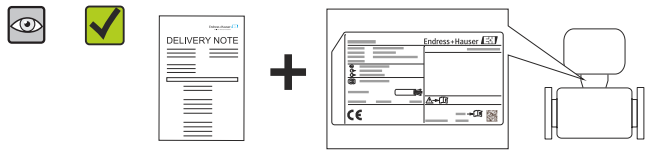

Do the nameplate data match the ordering information on the delivery note?

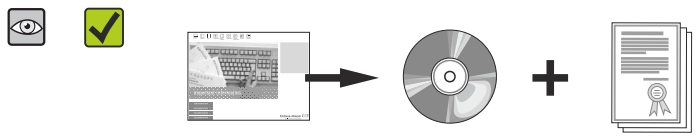

Is the CD-ROM with the Technical Documentation (depends on device version) and documents present?

- If one of the conditions is not satisfied, contact your Endress+Hauser Sales Center.
- Depending on the device version, the CD-ROM might not be part of the delivery! In such cases, the technical documentation is available via the Internet or via the *Endress+Hauser Operations App*, see the "Product identification" section (→ 13).

4.2 Product identification

The following options are available for identification of the measuring device:
- Nameplate specifications
- Order code with breakdown of the device features on the delivery note
- Enter serial numbers from nameplates in *W@M Device Viewer* (www.endress.com/deviceviewer): All information about the measuring device is displayed.
- Enter the serial number from the nameplates into the *Endress+Hauser Operations App* or scan the 2-D matrix code (QR code) on the nameplate with the *Endress+Hauser Operations App*: all the information for the measuring device is displayed.

For an overview of the scope of the associated Technical Documentation, refer to the following:
- The chapters "Additional standard documentation on the device" (→ 8) and "Supplementary device-dependent documentation" (→ 8)
- The *W@M Device Viewer*: Enter the serial number from the nameplate (www.endress.com/deviceviewer)
- The *Endress+Hauser Operations App*: Enter the serial number from the nameplate or scan the 2-D matrix code (QR code) on the nameplate.

4.2.1 Transmitter nameplate

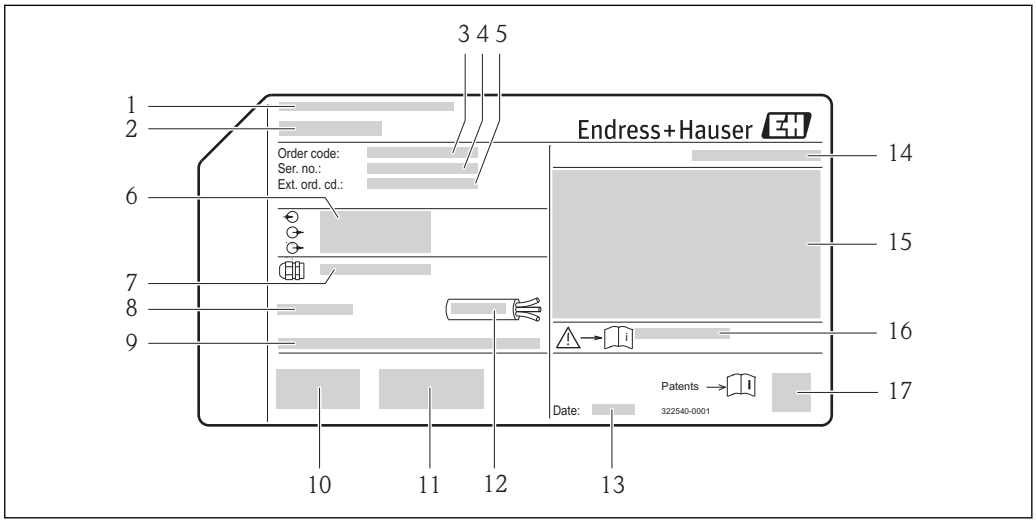

2 *Example of a transmitter nameplate*

1 *Manufacturing location*
2 *Name of the transmitter*
3 *Order code*
4 *Serial number (Ser. no.)*
5 *Extended order code (Ext. ord. cd.)*
6 *Electrical connection data, e.g. available inputs and outputs, supply voltage*
7 *Type of cable glands*
8 *Permitted ambient temperature (T_a)*
9 *Firmware version (FW) from the factory*
10 *CE mark, C-Tick*
11 *Additional information on version: certificates, approvals*
12 *Permitted temperature range for cable*
13 *Manufacturing date: year-month*
14 *Degree of protection*
15 *Approval information for explosion protection*
16 *Document number of safety-related supplementary documentation*
17 *2-D matrix code*

4.2.2 Sensor nameplate

Order code for "Housing" option B "GT18 two-chamber, 316L" and option K "GT18 two-chamber, remote, 316L"

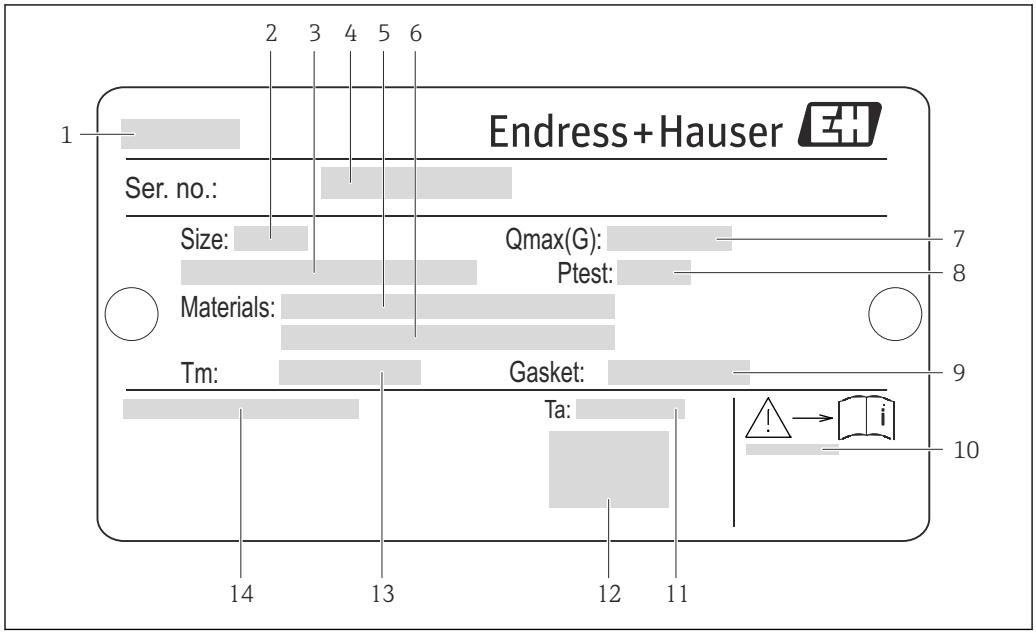

3 Example of a sensor nameplate

1 Name of the sensor
2 Nominal diameter of the sensor
3 Flange nominal diameter/nominal pressure
4 Serial number (Ser. no.)
5 Measuring tube material
6 Measuring tube material
7 Maximal permitted volume flow (gas/steam)
8 Test pressure of the sensor
9 Seal material
10 Document number of safety-related supplementary documentation (→ 160)
11 Ambient temperature range
12 CE mark
13 Medium temperature range
14 Degree of protection

Order code for "Housing" option C "GT20 two-chamber, aluminum coated"

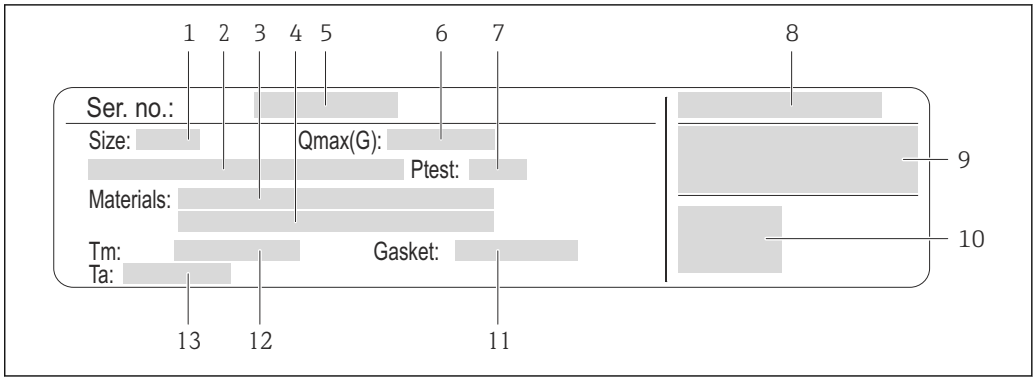

4 *Example of a sensor nameplate*

1 *Nominal diameter of the sensor*
2 *Flange nominal diameter/nominal pressure*
3 *Measuring tube material*
4 *Measuring tube material*
5 *Serial number (Ser. no.)*
6 *Maximal permitted volume flow (gas/steam)*
7 *Test pressure of the sensor*
8 *Degree of protection*
9 *Approval information for explosion protection and Pressure Equipment Directive*
10 *CE mark*
11 *Seal material*
12 *Medium temperature range*
13 *Ambient temperature range*

Order code for "Housing" option J "GT20 two-chamber, remote, aluminum coated"

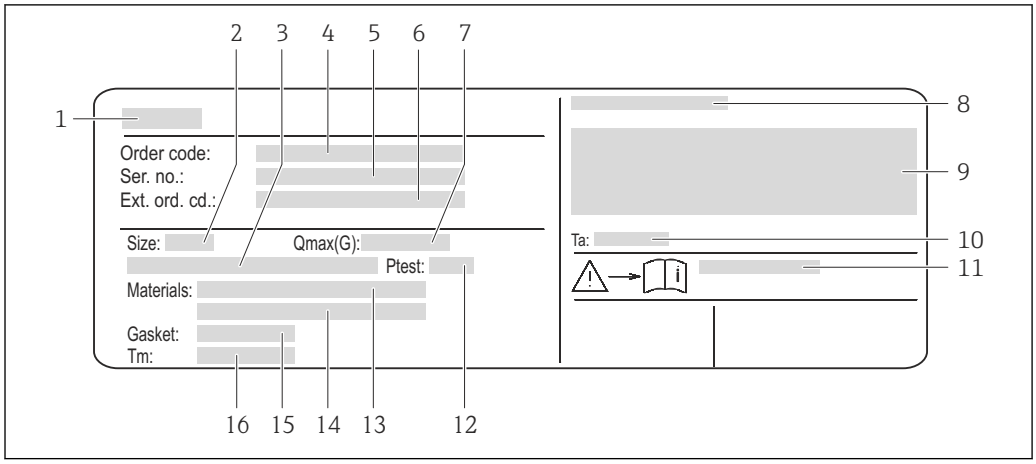

5 Example of a sensor nameplate

1 Name of the sensor
2 Nominal diameter of the sensor
3 Flange nominal diameter/nominal pressure
4 Order code
5 Serial number (Ser. no.)
6 Extended order code (Ext. ord. cd.)
7 Maximal permitted volume flow (gas/steam)
8 Degree of protection
9 Approval information for explosion protection and Pressure Equipment Directive
10 Ambient temperature range
11 Document number of safety-related supplementary documentation (→ 160)
12 Test pressure of the sensor
13 Measuring tube material
14 Measuring tube material
15 Seal material
16 Medium temperature range

Order code

The measuring device is reordered using the order code.

Extended order code

- The device type (product root) and basic specifications (mandatory features) are always listed.
- Of the optional specifications (optional features), only the safety and approval-related specifications are listed (e.g. LA). If other optional specifications are also ordered, these are indicated collectively using the # placeholder symbol (e.g. #LA#).
- If the ordered optional specifications do not include any safety and approval-related specifications, they are indicated by the + placeholder symbol (e.g. XXXXXX-ABCDE +).

4.2.3 Symbols on measuring device

Symbol	Meaning
⚠	**WARNING!** This symbol alerts you to a dangerous situation. Failure to avoid this situation can result in serious or fatal injury.
 A0011194	**Reference to documentation** Refers to the corresponding device documentation.
 A0011199	**Protective ground connection** A terminal which must be connected to ground prior to establishing any other connections.

5 Storage and transport

5.1 Storage conditions

Observe the following notes for storage:
- Store in the original packaging to ensure protection from shock.
- Do not remove protective covers or protective caps installed on process connections. They prevent mechanical damage to the sealing surfaces and contamination in the measuring tube.
- Protect from direct sunlight to avoid unacceptably high surface temperatures.
- Storage temperature:
  - All components apart from the display modules: −50 to +80 °C (−58 to +176 °F)
  - Display modules:−40 to +80 °C (−40 to +176 °F)
- Store in a dry and dust-free place.
- Do not store outdoors.

5.2 Transporting the product

⚠ WARNING

Center of gravity of the measuring device is higher than the suspension points of the webbing slings.

Risk of injury if the measuring device slips.
- ▶ Secure the measuring device from rotating or slipping.
- ▶ Observe the weight specified on the packaging (stick-on label).
- ▶ Observe the transport instructions on the stick-on label on the electronics compartment cover.

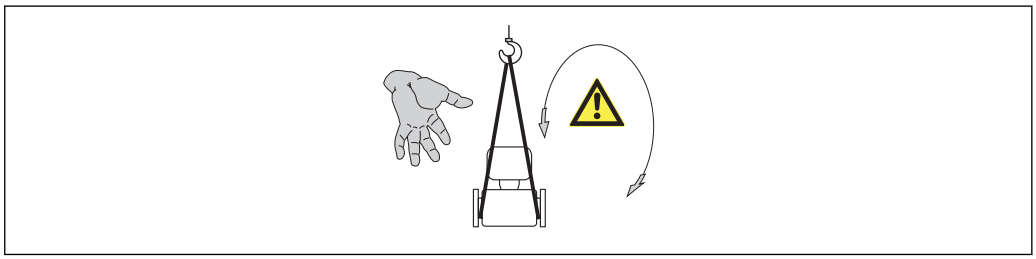

A0015606

Observe the following notes during transport:
- Transport the measuring device to the measuring point in the original packaging.
- Lifting gear
  - Webbing slings: Do not use chains, as they could damage the housing.
  - For wood crates, the floor structure enables these to be loaded lengthwise or broadside using a forklift.
- For measuring device >DN 40 (1½): lift the measuring device using the webbing slings at the process connections; do not lift at the transmitter housing or the connection housing of the remote version.
- Do not remove protective covers or protective caps installed on process connections. They prevent mechanical damage to the sealing surfaces and contamination in the measuring tube.

5.3 Packaging disposal

All packaging materials are environmentally friendly and 100% recyclable:
- Measuring device secondary packaging: polymer stretch film that conforms to EC Directive 2002/95/EC (RoHS).
- Packaging:
  - Wood crate, treated in accordance with ISPM 15 standard, which is confirmed by the affixed IPPC logo.
    or
  - Carton in accordance with European Packaging Directive 94/62EC; recyclability is confirmed by the affixed RESY symbol.
- Seaworthy packaging (optional): Wood crate, treated in accordance with ISPM 15 standard, which is confirmed by the affixed IPPC logo.
- Carrying and mounting hardware:
  - Disposable plastic pallet
  - Plastic straps
  - Plastic adhesive strips
- Dunnage: Paper cushion

6 Installation

6.1 Installation conditions

6.1.1 Mounting position

Mounting location

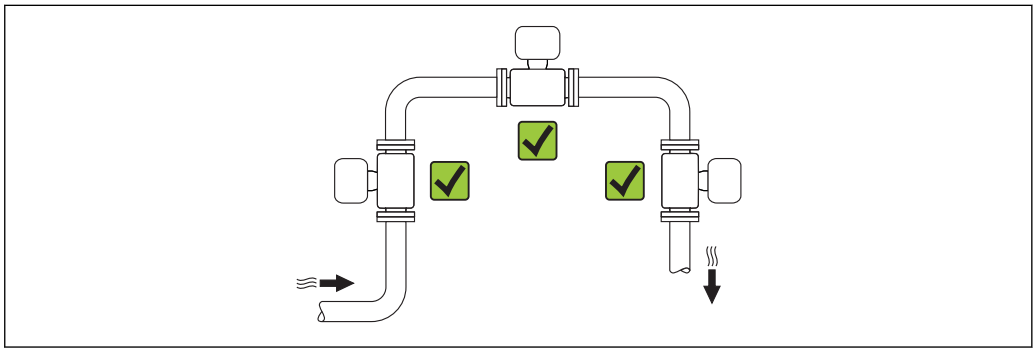

A0015543

Orientation

The direction of the arrow on the sensor nameplate helps you to install the sensor according to the flow direction (direction of medium flow through the piping).

Vortex meters require a fully developed flow profile as a prerequisite for correct volume flow measurement. Therefore, please note the following:

Orientation			Compact version	Remote version
A	Vertical orientation	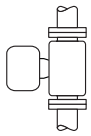 A0015545	✔✔ 1)	✔✔
B	Horizontal orientation, transmitter head up	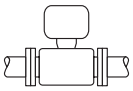 A0015589	✔✔ 2) 3)	✔✔
C	Horizontal orientation, transmitter head down	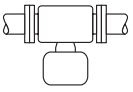 A0015590	✔✔ 4) 5)	✔✔
D	Horizontal orientation, transmitter head at side	A0015592	✔✔ 4)	✔✔

1) In the case of liquids, there should be upward flow in vertical pipes to avoid partial pipe filling (Fig. A). Disruption in flow measurement! In the case of vertical orientation and downward flowing liquid, the pipe always needs to be completely filled to ensure correct liquid flow measurement.
2) Danger of electronics overheating! If the fluid temperature is ≥ 200 °C (392 °F) orientation B is not permitted for the wafer version (Prowirl D) with nominal diameters DN 100 (4") and DN 150 (6").
3) In the case of hot media (e.g. steam or fluid temperature (TM) ≥ 200 °C (392 °F): orientation C or D
4) In the case of very cold media (e.g. liquid nitrogen): orientation B or D
5) For "wet steam detection/measurement" option: orientation C

Minimum spacing and cable length

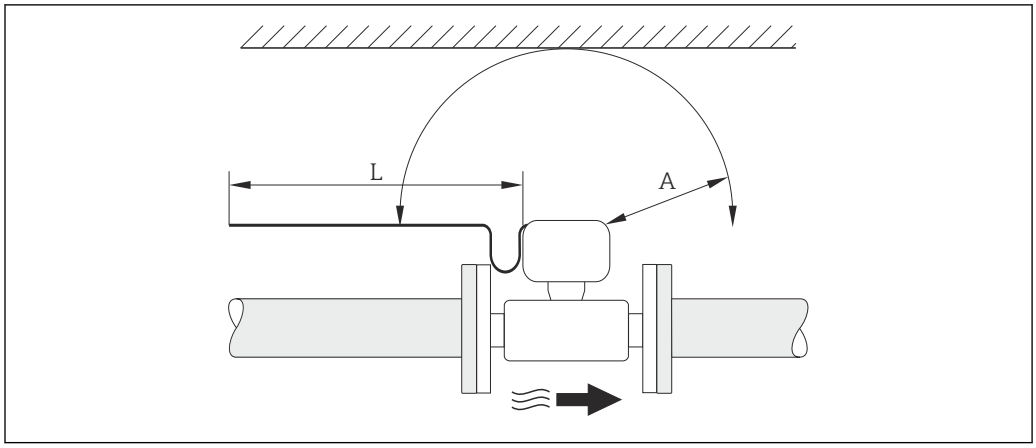

A Minimum spacing in all directions
L Required cable length

The following dimensions must be observed to guarantee problem-free access to the device for service purposes:
- A =100 mm (3.94 in)
- L = L + 150 mm (5.91 in)

Rotating the electronics housing and the display

The electronics housing can be rotated continuously by 360 °° on the housing support. The display unit can be rotated in 45 ° stages. This means you can read the display comfortably from all directions.

Inlet and outlet runs

To attain the specified level of accuracy of the measuring device, the inlet and outlet runs mentioned below must be maintained at the very minimum.

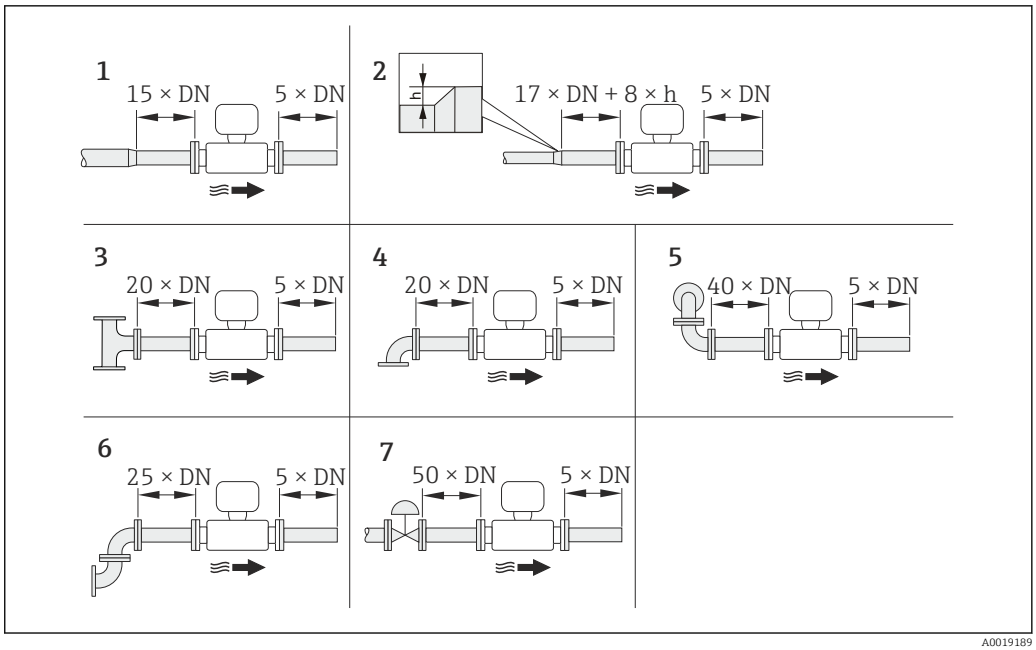

6 *Minimum inlet and outlet runs with various flow obstructions*

h Difference in expansion
1 Reduction by one nominal diameter size
2 Expansion
3 T-piece
4 Single elbow (90° elbow)
5 Double elbow 3D (2 × 90° elbows, opposite, not on one plane)
6 Double elbow (2 × 90° elbows, opposite)
7 Control valve

- If there are several flow disturbances present, the longest specified inlet run must be maintained.
- If the required inlet runs cannot be observed, it is possible to install a specially designed flow conditioner (→ 24).

Flow conditioner

If the required inlet runs cannot be observed, it is possible to install a specially designed flow conditioner which can be ordered from Endress+Hauser. The flow conditioner is fitted between two pipe flanges and centered by the mounting bolts. Generally this reduces the inlet run needed to 10 × DN with full accuracy.

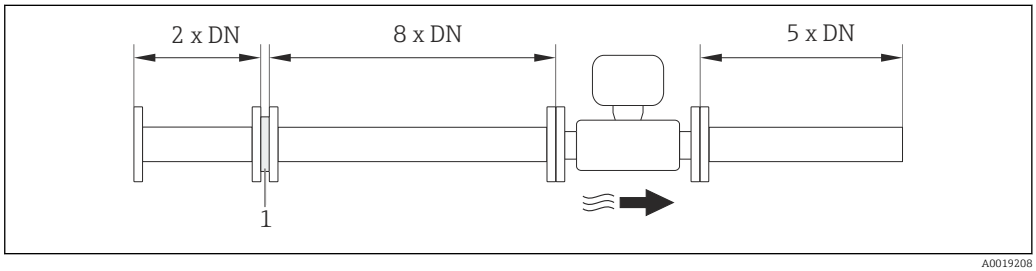

1 Flow conditioner

The pressure loss for flow conditioners is calculated as follows: Δp [mbar] = 0.0085 · ρ [kg/m³] · v² [m/s]

Example for steam	Example for H_2O condensate (80 °C)
p = 10 bar abs.	ρ = 965 kg/m³

t = 240 °C → ρ = 4.39 kg/m^3

v =40 m/s

Δ p = 0.0085 · 4.394.39 · 40 ^{2} = 59.7 mbar

v =2.5 m/s

Δ p = 0.0085 · 965 · 2.5 ^{2} = 51.3 mbar

ρ : density of the process medium

v: average flow velocity

abs. = absolute

Outlet runs when installing external devices

If installing an external device, observe the specified distance.

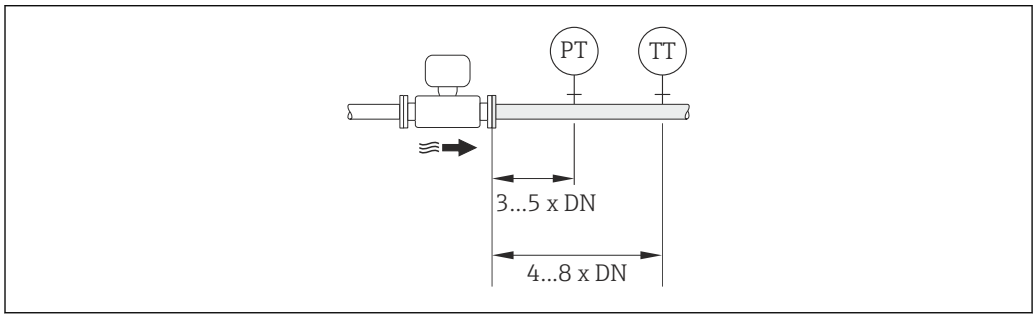

PT Pressure transmitter
TT Temperature transmitter

Installation dimensions

For the dimensions and installation lengths of the device, see the "Technical Information" document, "Mechanical construction" section

6.1.2 Requirements from environment and process

Ambient temperature range

Compact version

Measuring device	Non-Ex:	−40 to +80 °C (−40 to +176 °F) [1]
	Ex i:	−40 to +70 °C (−40 to +158 °F) [1]
	EEx d/XP version:	−40 to +60 °C (−40 to +140 °F) [1]
	ATEX II1/2G Ex d, Ex ia:	−40 to +60 °C (−40 to +140 °F) [1]
Local display		−20 to +60 °C (−4 to +140 °F)

1) Additionally available as order code for "Test, certificate", option JN "Transmitter ambient temperature −50 °C (−58 °F)".

Remote version

Transmitter	Non-Ex:	−40 to +80 °C (−40 to +176 °F) [1]
	Ex i:	−40 to +80 °C (−40 to +176 °F) [1]
	Ex d:	−40 to +60 °C (−40 to +140 °F) [1]
	ATEX II1/2G Ex d, Ex ia:	−40 to +60 °C (−40 to +140 °F) [1]
Sensor	Non-Ex:	−40 to +85 °C (−40 to +185 °F) [1]

	Ex i:	−40 to +85 °C (−40 to +185 °F) [1]
	Ex d:	−40 to +85 °C (−40 to +185 °F) [1]
	ATEX II1/2G Ex d, Ex ia:	−40 to +85 °C (−40 to +185 °F) [1]
Local display		−20 to +60 °C (−4 to +140 °F)

1) Additionally available as order code for "Test, certificate", option JN "Transmitter ambient temperature −50 °C (−58 °F)".

► If operating outdoors:
Avoid direct sunlight, particularly in warm climatic regions.

Thermal insulation

For optimum temperature measurement and mass calculation, heat transfer at the sensor must be avoided for some fluids. This can be ensured by installing thermal insulation. A wide range of materials can be used for the required insulation.

This applies for:
- Compact version
- Remote sensor version

The maximum insulation height permitted is illustrated in the diagram:

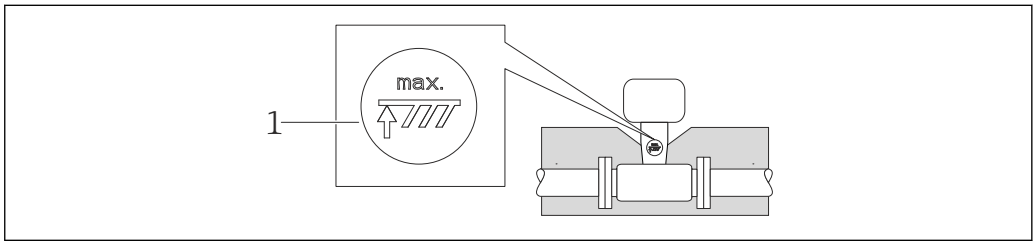

A0019212

1 Maximum insulation height

► When insulating, ensure that a sufficiently large area of the housing support remains exposed.

The uncovered part serves as a radiator and protects the electronics from overheating and excessive cooling.

NOTICE

Electronics overheating on account of thermal insulation!

- ► Observe the maximum permitted insulation height of the transmitter neck so that the transmitter head and/or the connection housing of the remote version is completely free.
- ► Observe information on the permissible temperature ranges (→ 150).
- ► Note that a certain orientation might be required, depending on the fluid temperature (→ 19).

Vibrations

The correct operation of the measuring system is not affected by plant vibrations up to 1 g, 10 to 500 Hz. Therefore no special measures are needed to secure the sensors.

6.1.3 Special mounting instructions

Installation for delta heat measurements

Order code for *"Sensor version"*, option 3 *"Mass flow (integrated temperature measurement)"*

The second temperature measurement is taken using a separate temperature sensor. The measuring device reads in this value via a communication interface.

- In the case of saturated steam delta heat measurements, the Prowirl 200 must be installed on the steam side.
- In the case of water delta heat measurements, the Prowirl 200 can be installed on the cold or warm side.

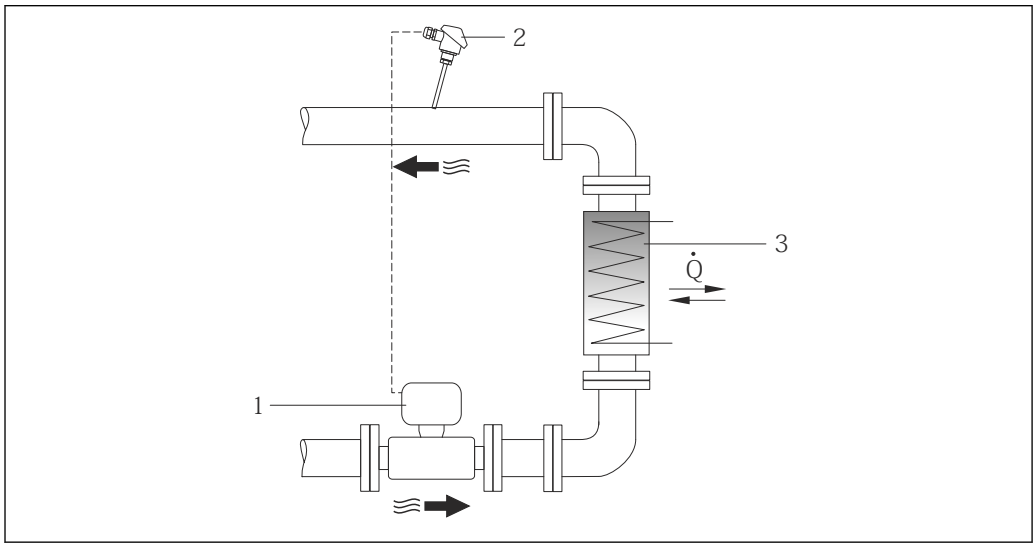

7 *Layout for delta heat measurement of saturated steam and water*

1 Prowirl
2 Temperature sensor
3 Heat exchanger
Q Heat flow

Weather protection cover

Observe the following minimum head clearance: 222 mm (8.74 in)

For information the weather protection cover, see (→ 130)

6.2 Mounting the measuring device

6.2.1 Required tools

For transmitter

- For turning the transmitter housing: Open-ended wrench8 mm
- For opening the securing clamps: Allen key3 mm

For sensor

For flanges and other process connections: Corresponding mounting tools

6.2.2 Preparing the measuring device

1. Remove all remaining transport packaging.
2. Remove any protective covers or protective caps present from the sensor.
3. Remove stick-on label on the electronics compartment cover.

6.2.3 Mounting the sensor

⚠ WARNING

Danger due to improper process sealing!

- ▶ Ensure that the inside diameters of the gaskets are greater than or equal to that of the process connections and piping.
- ▶ Ensure that the gaskets are clean and undamaged.
- ▶ Install the gaskets correctly.

1. Ensure that the direction of the arrow on the sensor matches the flow direction of the medium.
2. To ensure compliance with device specifications, install the measuring device between the pipe flanges in a way that it is centered in the measurement section.
3. Install the measuring device or turn the transmitter housing so that the cable entries do not point upwards.

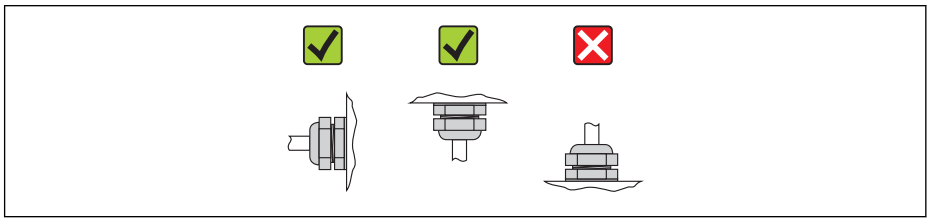

A0013964

Mounting kit

Mounting kit for disc (wafer version)

The centering rings supplied are used to mount and center the wafer-style devices.

A mounting kit comprises:
- Tie rods
- Seals
- Nuts
- Washers

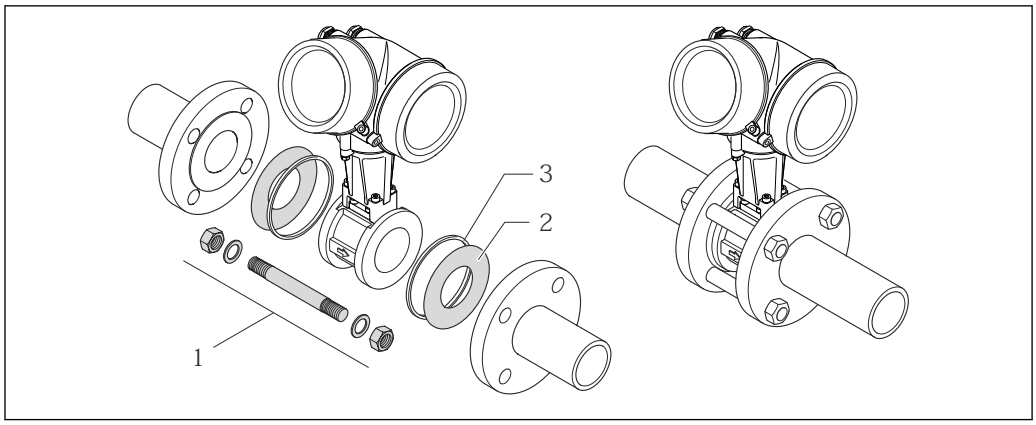

8 *Mounting kit for wafer version*

1 Nut, washer, tie rod
2 Seal
3 Centering ring (is supplied with the measuring device)

A mounting kit can be ordered separately (see the "Accessories" section (→ 131)).

6.2.4 Mounting the transmitter of the remote version

CAUTION

Ambient temperature too high!

Danger of electronics overheating and housing deformation.

- Do not exceed the permitted maximum ambient temperature (→ 22).
- If operating outdoors: Avoid direct sunlight and exposure to weathering, particularly in warm climatic regions.

CAUTION

Excessive force can damage the housing!

- Avoid excessive mechanical stress.

The transmitter of the remote version can be mounted in the following ways:

- Wall mounting
- Pipe mounting

Wall mounting

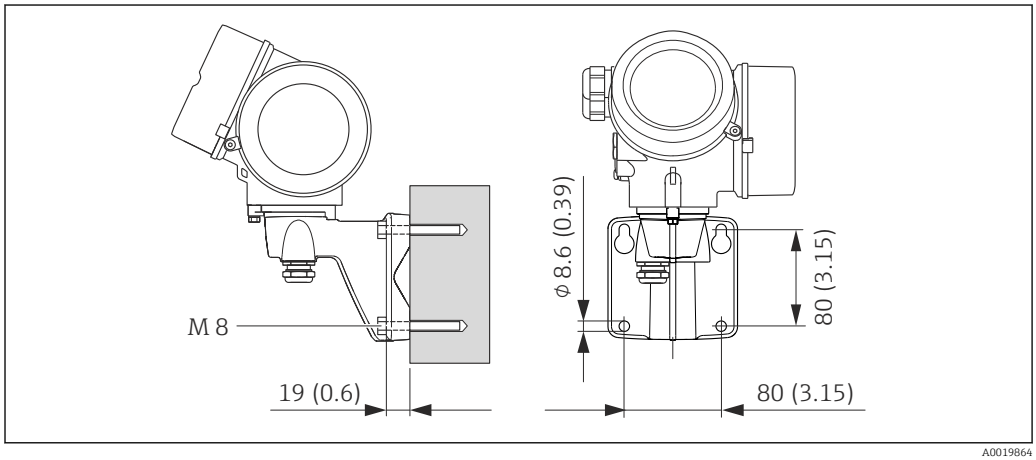

9 *Engineering unit mm (in)*

1. Drill the holes.
2. Insert wall plugs into the drilled holes.
3. Screw in the securing screws slightly at first.
4. Fit the transmitter housing over the securing screws and mount in place.
5. Tighten the securing screws.

Post mounting

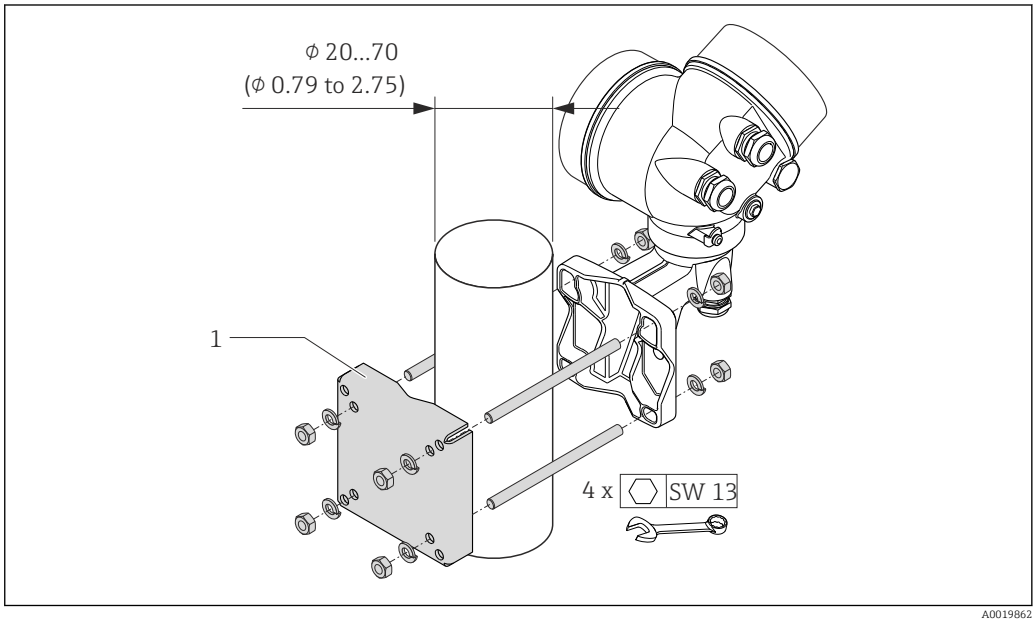

10 Engineering unit mm (in)

1 Post retainer kit for post mounting

6.2.5 Turning the transmitter housing

To provide easier access to the connection compartment or display module, the transmitter housing can be turned.

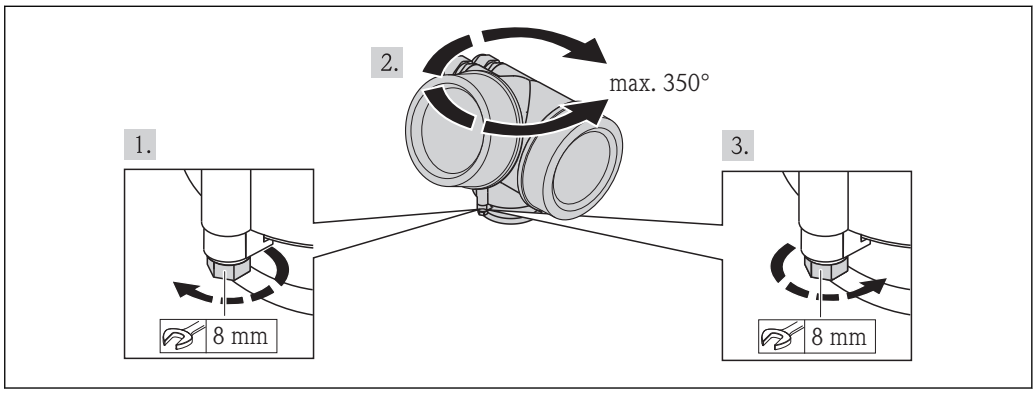

1. Release the fixing screw.
2. Turn the housing to the desired position.
3. Firmly tighten the securing screw.

6.2.6 Turning the display module

The display module can be turned to optimize display readability and operability.

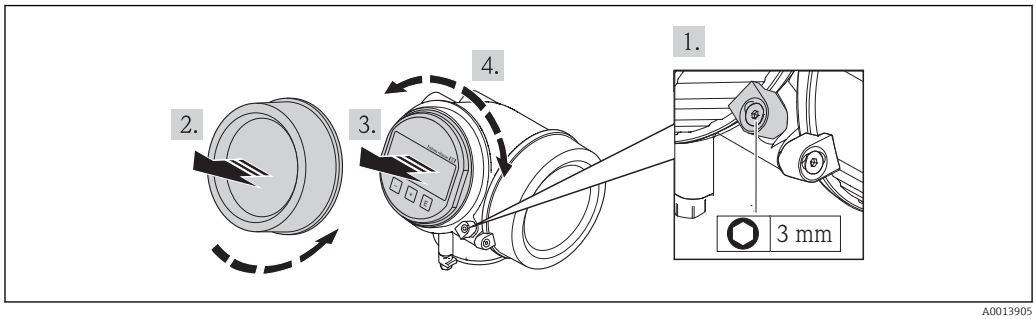

A0013905

1. Loosen the securing clamp of the electronics compartment cover using an Allen key.
2. Unscrew cover of the electronics compartment from the transmitter housing.
3. Optional: pull out the display module with a gentle rotational movement.
4. Rotate the display module into the desired position: Max. 8 × 45° in each direction.
5. Without display module pulled out:
   Allow display module to engage at desired position.
6. With display module pulled out:
   Feed the cable into the gap between the housing and main electronics module and plug the display module into the electronics compartment until it engages.
7. Reverse the removal procedure to reassemble the transmitter.

6.3 Post-installation check

Is the device undamaged (visual inspection)?	❑
Does the measuring device conform to the measuring point specifications? For example: ▪ Process temperature (→ 🖹 150) ▪ Process pressure (refer to the section on "Pressure-temperature ratings" in the "Technical Information" document) ▪ Ambient temperature (→ 🖹 22) ▪ Measuring range (→ 🖹 138)	❑
Has the correct orientation for the sensor been selected (→ 🖹 19)? ▪ According to sensor type ▪ According to medium temperature ▪ According to medium properties (outgassing, with entrained solids)	❑
Does the arrow on the sensor nameplate match the direction of flow of the fluid through the piping (→ 🖹 19)?	❑
Are the measuring point identification and labeling correct (visual inspection)?	❑
Is the device adequately protected from precipitation and direct sunlight?	❑
Are the securing screw and securing clamp tightened securely?	❑

7 Electrical connection

The measuring device does not have an internal circuit breaker. For this reason, assign the measuring device a switch or power-circuit breaker so that the power supply line can be easily disconnected from the mains.

7.1 Connection conditions

7.1.1 Required tools

- For cable entries: Use corresponding tools
- For securing clamp: Allen key 3 mm
- Wire stripper
- When using stranded cables: crimping tool for ferrule
- For removing cables from terminal: flat blade screwdriver ≤3 mm (0.12 in)

7.1.2 Requirements for connecting cable

The connecting cables provided by the customer must fulfill the following requirements.

Electrical safety

In accordance with applicable federal/national regulations.

Permitted temperature range

- −40 °C (−40 °F) to +80 °C (+176 °F)
- Minimum requirement: cable temperature range ≥ ambient temperature +20 K

Signal cable

FOUNDATION Fieldbus

Twisted, shielded two-wire cable.

For further information on planning and installing FOUNDATION Fieldbus networks see:

- Operating Instructions for "FOUNDATION Fieldbus Overview" (BA00013S)
- FOUNDATION Fieldbus Guideline
- IEC 61158-2 (MBP)

Pulse/frequency/switch output

Standard installation cable is sufficient.

Connecting cable for remote version

Connecting cable (standard)

Standard cable	4 × 2 × 0.34 mm² (22 AWG) PVC cable with common shield (4 pairs, pair-stranded)
Flame resistance	According to DIN EN 60332-1-2
Oil-resistance	According to DIN EN 60811-2-1
Shielding	Galvanized copper-braid, opt. density approx. 85%

Cable length	5 m (16 ft), 10 m (32 ft), 20 m (65 ft), 30 m (98 ft)
Operating temperature	When mounted in a fixed position: −50 to +105 °C (−58 to +221 °F); when cable can move freely: −25 to +105 °C (−13 to +221 °F)

Connecting cable (reinforced)

Cable, reinforced	4 × 2 × 0.34 mm² (22 AWG) PVC cable with common shield (4 pairs, pair-stranded) and additional steel-wire braided sheath
Flame resistance	According to DIN EN 60332-1-2
Oil-resistance	According to DIN EN 60811-2-1
Shielding	Galvanized copper-braid, opt. density approx. 85%
Strain relief and reinforcement	Steel-wire braid, galvanized
Cable length	5 m (16 ft), 10 m (32 ft), 20 m (65 ft), 30 m (98 ft)
Operating temperature	When mounted in a fixed position: −50 to +105 °C (−58 to +221 °F); when cable can move freely: −25 to +105 °C (−13 to +221 °F)

Cable diameter

- Cable glands supplied:
  M20 × 1.5 with cable Φ6 to 12 mm (0.24 to 0.47 in)
- Plug-in spring terminals for device version without integrated overvoltage protection: wire cross-sections 0.5 to 2.5 mm² (20 to 14 AWG)
- Screw terminals for device version with integrated overvoltage protection: wire cross-sections 0.2 to 2.5 mm² (24 to 14 AWG)

7.1.3 Terminal assignment

Transmitter

Connection version for FOUNDATION Fieldbus, pulse/frequency/switch output

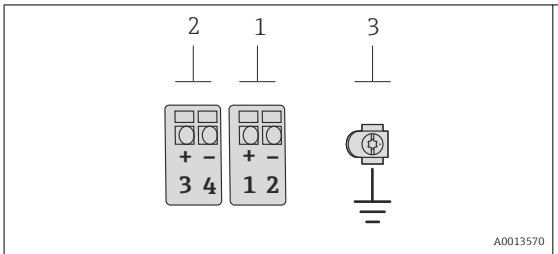	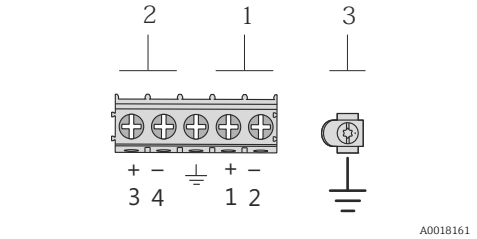
Maximum number of terminals	*Maximum number of terminals for order code for "Accessory mounted", option NA "Overvoltage protection"*

1 Output 1: FOUNDATION Fieldbus
2 Output 2 (passive: pulse/frequency/switch output
3 Ground terminal for cable shield

Order code for "Output"	Terminal numbers			
	Output 1		Output 2	
	1 (+)	2 (-)	3 (+)	4 (-)
Option **E** [1) 2)]	FOUNDATION Fieldbus		Pulse/frequency/switch output (passive)	

1) Output 1 must always be used; output 2 is optional.
2) FOUNDATION Fieldbus with integrated reverse polarity protection.

Remote version

In the case of the remote version, the sensor and transmitter are mounted separately from one another and connected by a connecting cable. The sensor is connected via the connection housing while the transmitter is connected via the connection compartment of the wall holder unit.

The way the transmitter wall holder is connected depends on the measuring device approval and the version of the connecting cable used.

Connection is only possible via terminals:
- For approvals Ex n, Ex tb and cCSAus Div. 1
- If a reinforced connecting cable is used

The connection is via an M12 connector:
- For all other approvals
- If the standard connecting cable is used

Connection to the connection housing of the sensor is always via terminals.

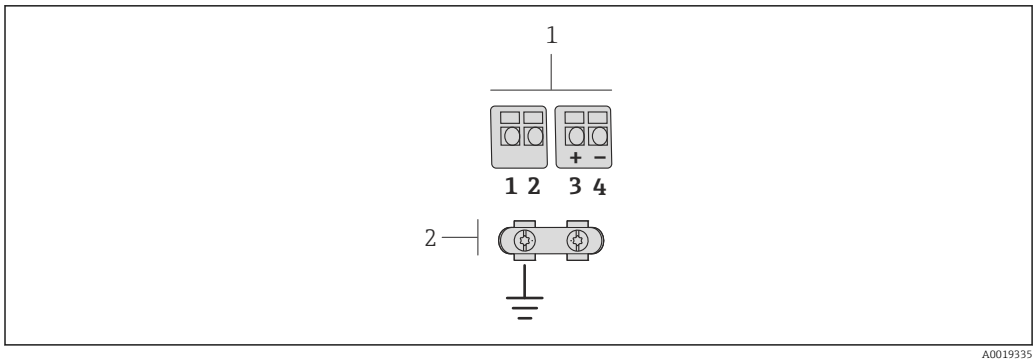

11 Terminals for connection compartment in the transmitter wall holder and the sensor connection housing

1 Terminals for connecting cable
2 Grounding via the cable strain relief

Terminal number	Assignment	Cable color Connecting cable
1	Supply voltage	Brown
2	Grounding	White
3	RS485 (+)	Yellow
4	RS485 (–)	Green

7.1.4 Shielding and grounding

Optimum electromagnetic compatibility (EMC) of the fieldbus system can only be guaranteed if the system components and, in particular, the lines are shielded and the shield forms as complete a cover as possible. A shield coverage of 90% is ideal.
- To ensure an optimum EMC protective effect, connect the shield as often as possible to the reference ground.
- For reasons of explosion protection, you should refrain from grounding however.

To comply with both requirements, the fieldbus system allows three different types of shielding:
- Shielding at both ends.
- Shielding at one end on the feed side with capacitance termination at the field device.
- Shielding at one end on the feed side.

Experience shows that the best results with regard to EMC are achieved in most cases in installations with one-sided shielding on the feed side (without capacitance termination at the field device). Appropriate measures with regard to input wiring must be taken to allow unrestricted operation when EMC interference is present. These measures have been taken into account for this device. Operation in the event of disturbance variables as per NAMUR NE21 is thus guaranteed.

Where there are large differences in potential between the individual grounding points, only one point of the shielding is connected directly with the reference ground. In systems without potential equalization, therefore, cable shielding of fieldbus systems should only be grounded on one side, for example at the fieldbus supply unit or at safety barriers.

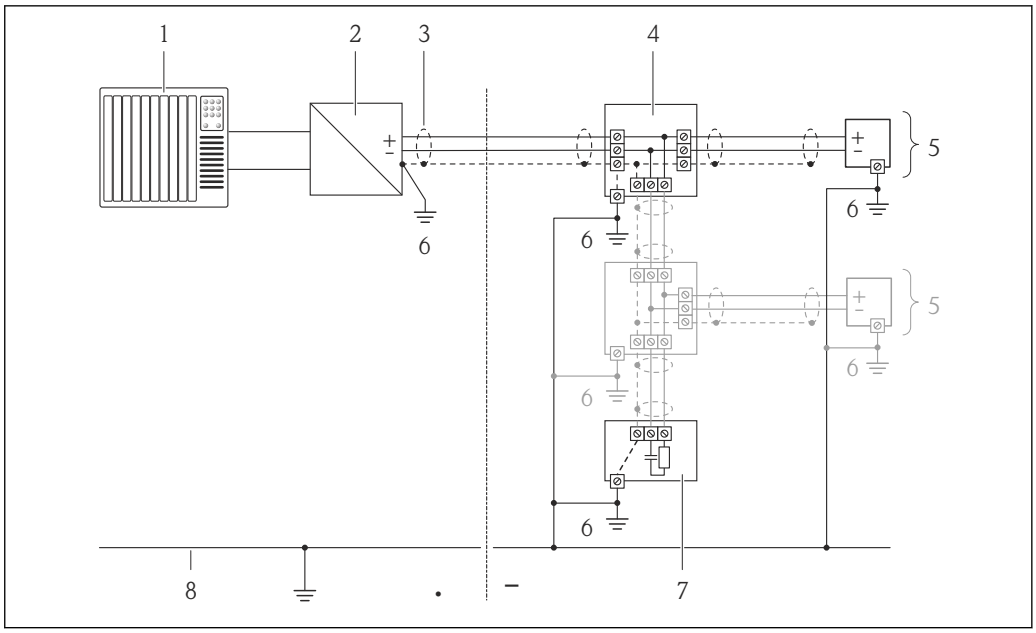

1 Controller (e.g. PLC)
2 Power Conditioner (FOUNDATION Fieldbus)
3 Cable shield
4 T-box
5 Measuring device
6 Local grounding
7 Bus terminator
8 Potential matching line

7.1.5 Requirements for the supply unit

Supply voltage

Transmitter

An external power supply is required for each output. The following supply voltage values apply for FOUNDATION Fieldbus and the pulse/frequency/switch output:

Supply voltage for a compact version without a local display [1)]

Order code for "Output"	Minimum terminal voltage [2)]	Maximum terminal voltage
Option **E** : FOUNDATION Fieldbus, pulse/ frequency/switch output	≥DC 9 V	DC 32 V

1) In event of external supply voltage of the power supply unit with load
2) The minimum terminal voltage increases if local operation is used: see the following table

Increase in minimum terminal voltage

Local operation	Increase in minimum terminal voltage
Order code for *"Display; Operation"*, option **C**: Local operation SD02	+ DC 1 V
Order code for *"Display; Operation"*, option **E**: Local operation SD03 with lighting (backlighting **not used**)	+ DC 1 V
Order code for *"Display; Operation"*, option **E**: Local operation SD03 with lighting (backlighting **used**)	+ DC 3 V

7.1.6 Preparing the measuring device

1. Remove dummy plug if present.
2. **NOTICE!** Insufficient sealing of the housing! Operational reliability of the measuring device could be compromised. Use suitable cable glands corresponding to the degree of protection.
   If measuring device is delivered without cable glands:
   Provide suitable cable gland for corresponding connecting cable (→ 29).
3. If measuring device is delivered with cable glands:
   Observe cable specification (→ 29).

7.2 Connecting the measuring device

NOTICE

Limitation of electrical safety due to incorrect connection!

- Have electrical connection work carried out by correspondingly trained specialists only.
- Observe applicable federal/national installation codes and regulations.
- Comply with local workplace safety regulations.
- For use in potentially explosive atmospheres, observe the information in the device-specific Ex documentation.

7.2.1 Connecting the transmitter

Connection via terminals

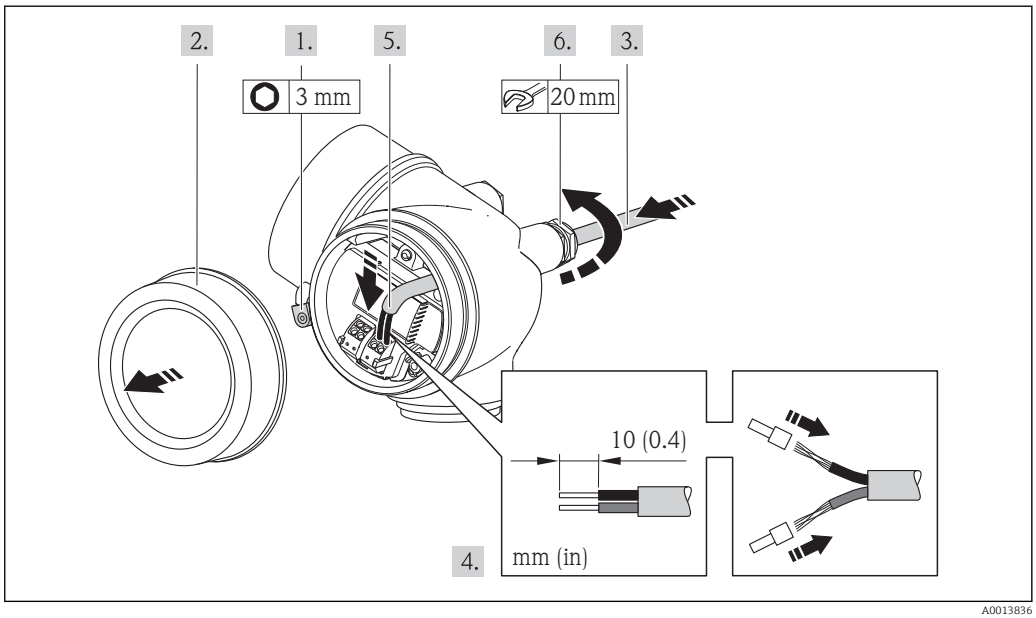

1. Loosen the securing clamp of the connection compartment cover.
2. Unscrew the connection compartment cover.
3. Push the cable through the cable entry . To ensure tight sealing, do not remove the sealing ring from the cable entry.
4. Strip the cable and cable ends. In the case of stranded cables, also fit ferrules.
5. **WARNING!** Housing degree of protection may be voided due to insufficient sealing of the housing. Screw in the screw without using any lubricant. The threads on the cover are coated with a dry lubricant.
   Reverse the removal procedure to reassemble the transmitter.

Removing a cable

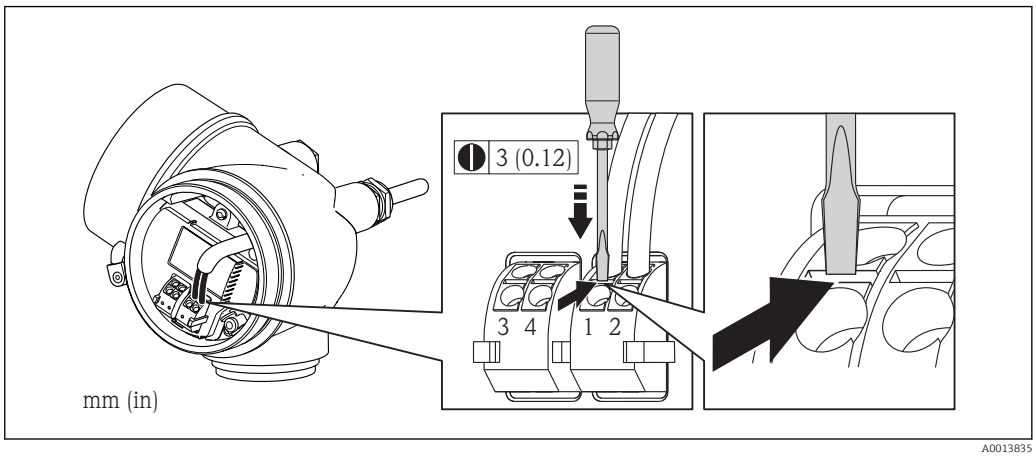

► To remove a cable from the terminal, use a flat-blade screwdriver to push the slot between the two terminal holes while simultaneously pulling the cable end out of the terminal.

7.2.2 Connecting the remote version

WARNING

Risk of damaging the electronic components!

- ▶ Ground the remote version and in doing so connect the sensor and transmitter to the same potential equalization.
- ▶ Only connect the sensor to a transmitter with the same serial number.

The following procedure (in the action sequence given) is recommended for the remote version:

1. Mount the transmitter and sensor.
2. Connect the connecting cable.
3. Connect the transmitter.

The way the transmitter wall holder is connected depends on the measuring device approval and the version of the connecting cable used.

Connection is only possible via terminals:
- For approvals Ex n, Ex tb and cCSAus Div. 1
- If a reinforced connecting cable is used

The connection is via an M12 connector:
- For all other approvals
- If the standard connecting cable is used

Connection to the connection housing of the sensor is always via terminals.

Connecting the sensor connection housing

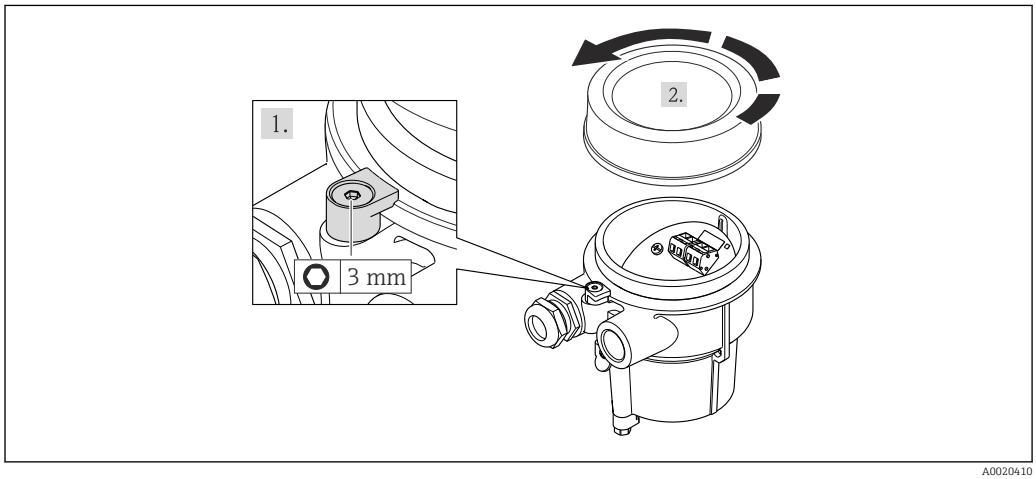

A0020410

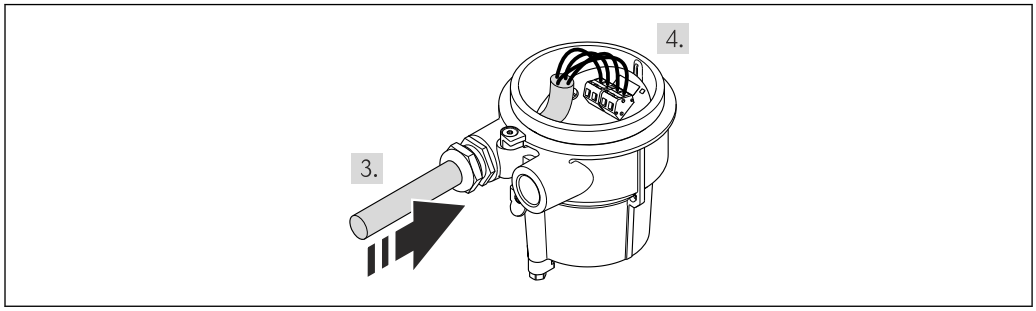

A0020411

1. Loosen the securing clamp.
2. Unscrew the housing cover.

3. Guide the connecting cable through the cable entry and into the connection housing (if using a connecting cable without an M12 device plug, use the shorter stripped end of the connecting cable).
4. Wire the connecting cable:
   ↳ Terminal 1 = brown cable
   Terminal 2 = white cable
   Terminal 3 = yellow cable
   Terminal 4 = green cable
5. Connect the cable shield via the cable strain relief.
6. Reverse the removal procedure to reassemble the transmitter.

Connection to the wall holder of the transmitter

Connecting the transmitter via plug

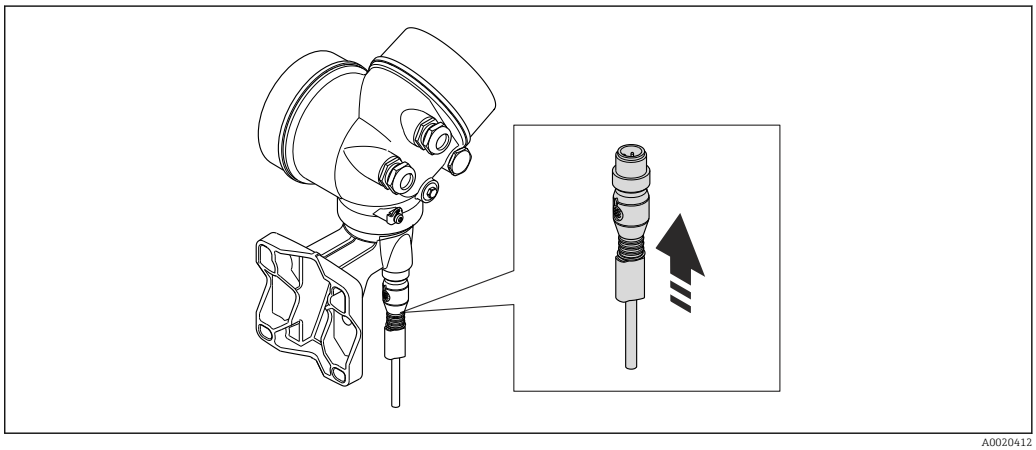

A0020412

▶ Connect the plug.

Connecting the transmitter via terminals

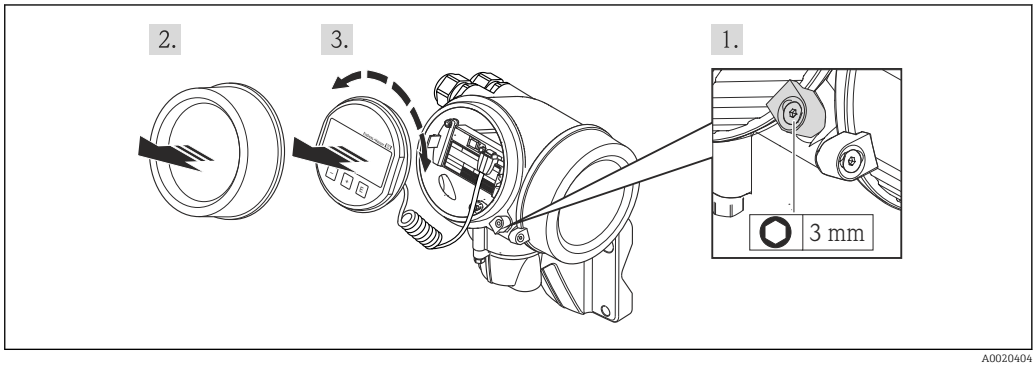

A0020404

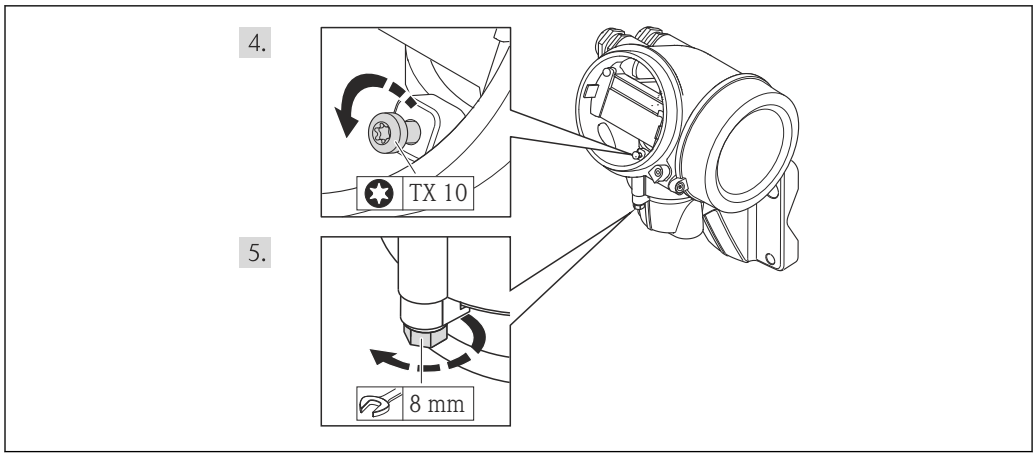

A0020405

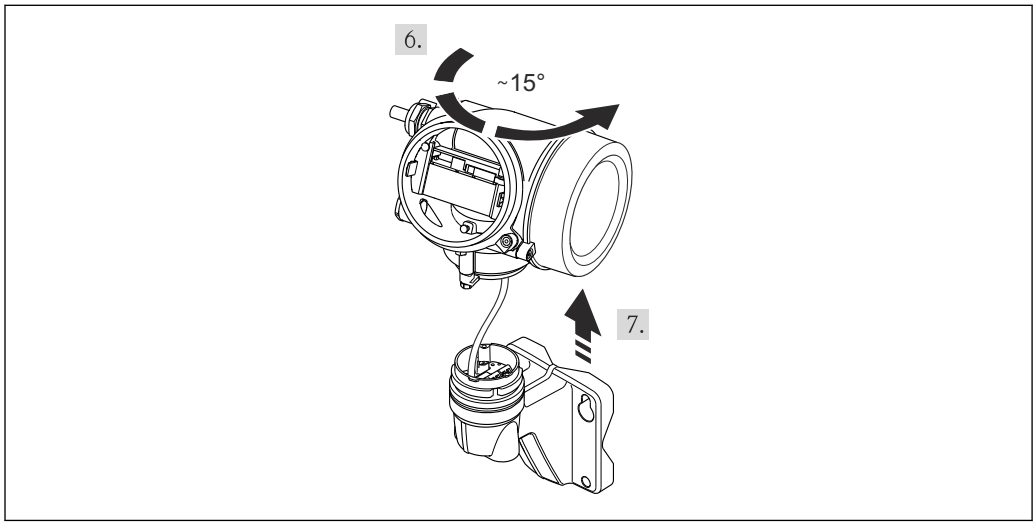

A0020406

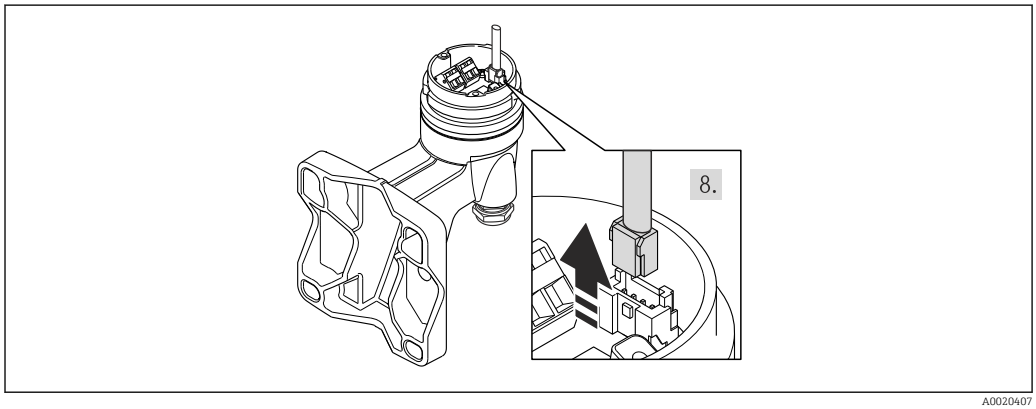

A0020407

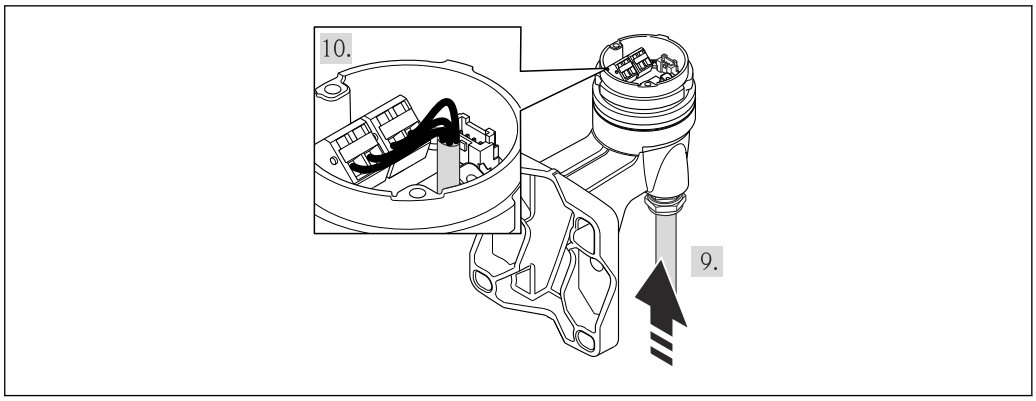

A0020409

1. Loosen the securing clamp of the transmitter housing.
2. Loosen the securing clamp of the electronics compartment cover.
3. Unscrew the electronics compartment cover.
4. Pull out the display module with a gentle rotational movement. To make it easier to access the lock switch, attach the display module to the edge of the electronics compartment.
5. Loosen the locking screw of the transmitter housing.
6. Turn the transmitter housing to the right until the mark and lift it up. The connection board of the wall housing is connected to the electronics board of the transmitter via a signal cable. Pay attention to the signal cable when lifting the transmitter housing!
7. Disconnect the signal cable from the connection board of the wall housing by pressing in the locking clip on the connector.
8. Remove the transmitter housing.
9. Guide the connecting cable through the cable entry and into the connection housing (if using a connecting cable without an M12 device plug, use the shorter stripped end of the connecting cable).
10. Wire the connecting cable:
    ↳ Terminal 1 = brown cable
    Terminal 2 = white cable
    Terminal 3 = yellow cable
    Terminal 4 = green cable
11. Connect the cable shield via the cable strain relief.
12. Reverse the removal procedure to reassemble the transmitter.

7.3 Special connection instructions

7.3.1 Connection examples

FOUNDATION Fieldbus

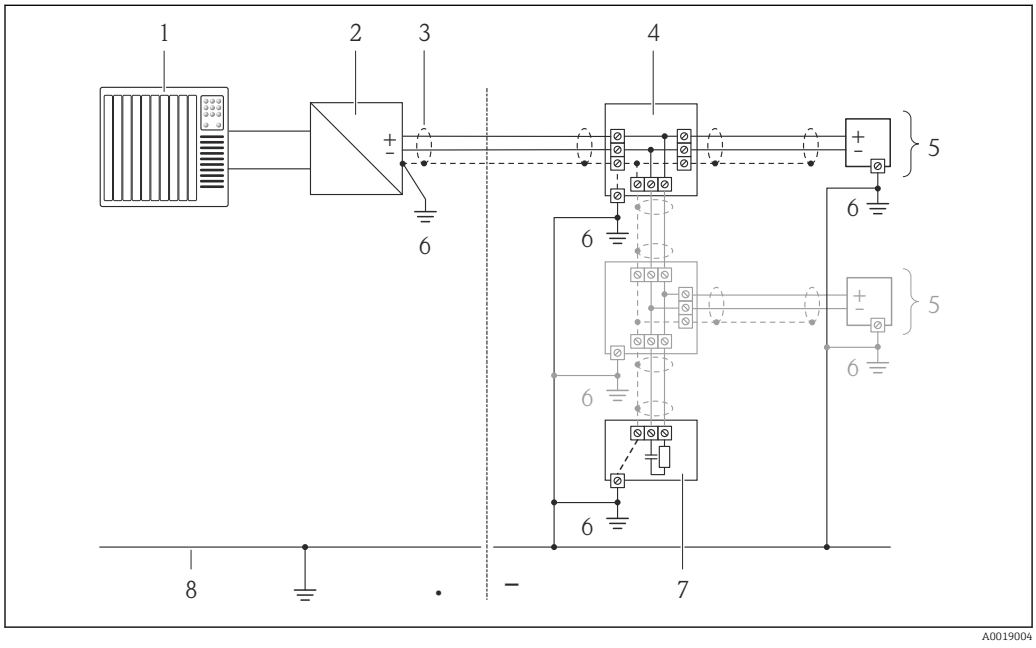

12 Connection example for FOUNDATION Fieldbus

1 Control system (e.g. PLC)
2 Power Conditioner (FOUNDATION Fieldbus)
3 Cable shield
4 T-box
5 Measuring device
6 Local grounding
7 Bus terminator
8 Potential matching line

7.4 Ensuring the degree of protection

The measuring device fulfills all the requirements for the IP66/67 degree of protection, Type 4X enclosure.

To guarantee IP66/67 degree of protection, Type 4X enclosure, carry out the following steps after the electrical connection:

1. Check that the housing seals are clean and fitted correctly. Dry, clean or replace the seals if necessary.
2. Tighten all housing screws and screw covers.
3. Firmly tighten the cable glands.
4. To ensure that moisture does not enter the cable entry, route the cable so that it loops down before the cable entry ("water trap").

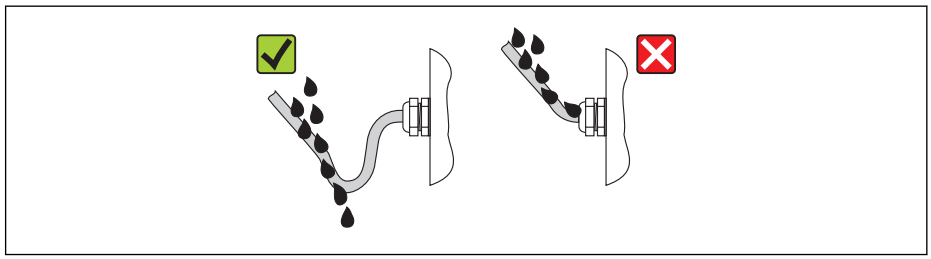

A0013960

5. Insert dummy plugs into unused cable entries.

7.5 Post-connection check

Are cables or the device undamaged (visual inspection)?	❑
Do the cables comply with the requirements (→ 🖹 29)?	❑
Do the cables have adequate strain relief?	❑
Are all the cable glands installed, firmly tightened and leak-tight? Cable run with "water trap" (→ 🖹 40) ?	❑
Depending on the device version: are all the device plugs firmly tightened ?	❑
Does the supply voltage match the specifications on the transmitter nameplate (→ 🖹 33)?	❑
Is the terminal assignment correct ?	❑
If supply voltage is present, do values appear on the display module?	❑
Are all housing covers installed and firmly tightened?	❑
Is the securing clamp tightened correctly?	❑

8 Operation options

8.1 Overview of operation options

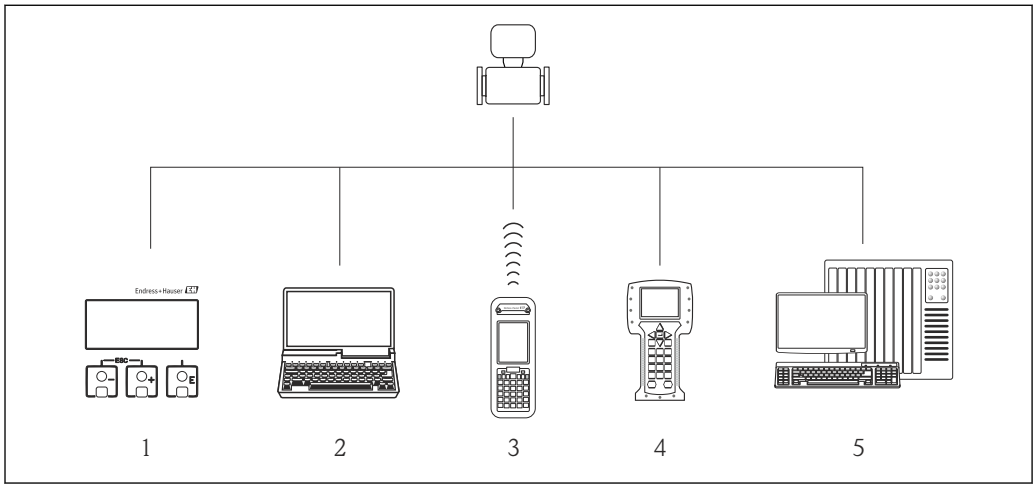

1 Local operation via display module
2 Computer with operating tool (e.g. FieldCare, AMS Device Manager)
3 Field Xpert SFX350 or SFX370
4 Field Communicator 475
5 Control system (e.g. PLC)

8.2 Structure and function of the operating menu

8.2.1 Structure of the operating menu

For an overview of the operating menu with menus and parameters (→ 162)

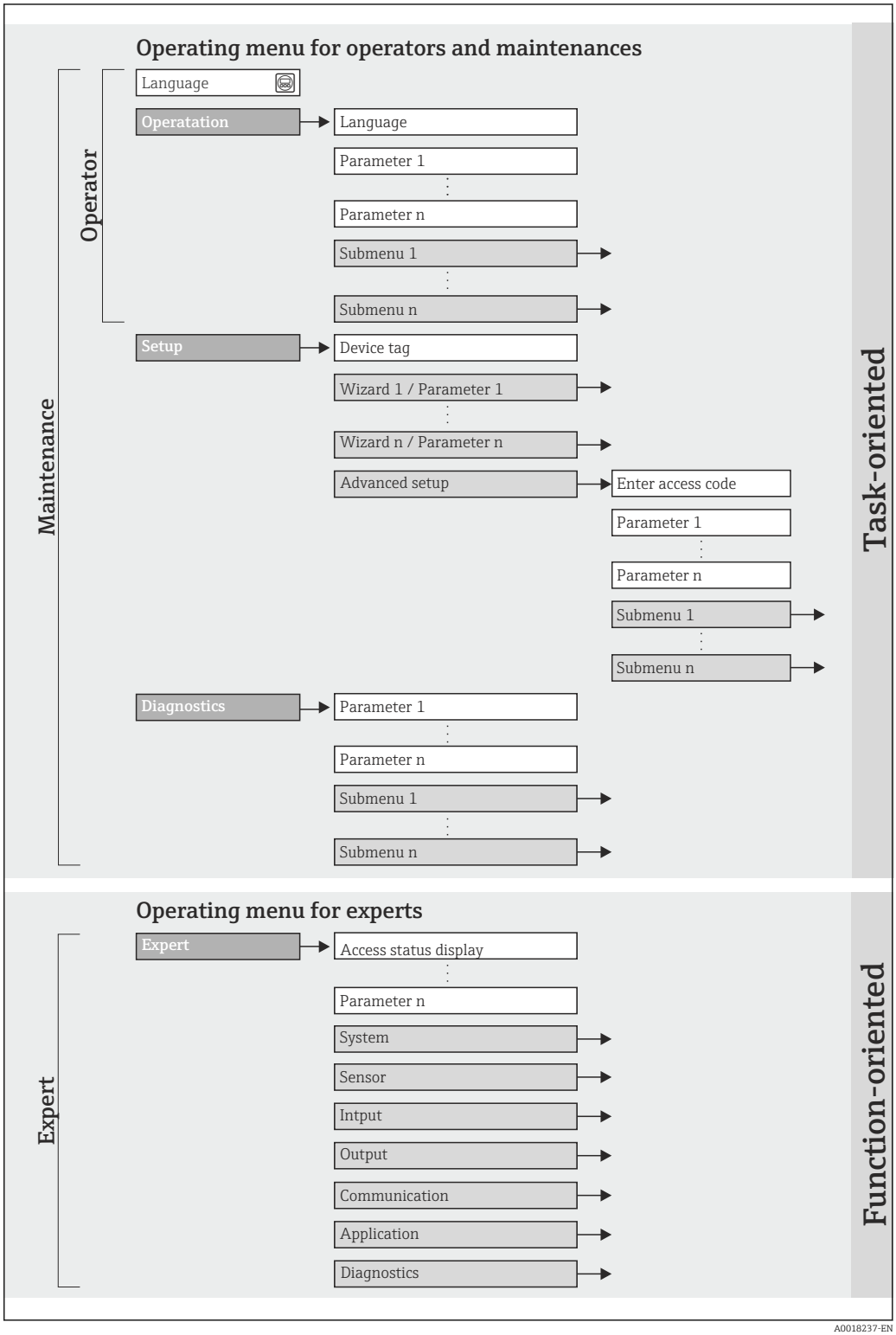

13 *Schematic structure of the operating menu*

8.2.2 Operating philosophy

The individual parts of the operating menu are assigned to certain user roles. Each user role corresponds to typical tasks within the device lifecycle.

8.3 Access to the operating menu via the local display

8.3.1 Operational display

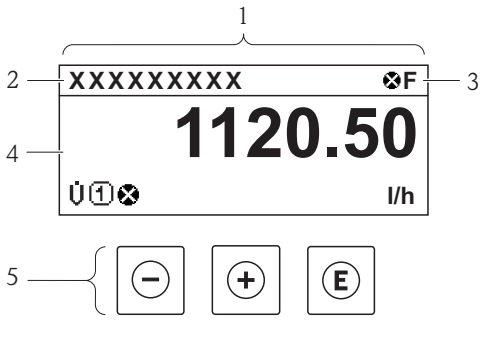

1 *Operational display*
2 *Device tag (→ 🖹 65)*
3 *Status area*
4 *Display area for measured values (4-line)*
5 *Operating elements (→ 🖹 49)*

Status area

The following symbols appear in the status area of the operational display at the top right:
- Status signals(→ 🖹 111)
- Diagnostic behavior(→ 🖹 112)
- Locking
- Communication

Locking

Symbol	Meaning
	Device locked The measuring device is hardware locked (→ 🖹 97).

Communication

Symbol	Meaning
	Communication via remote operation is active.

Display area

In the display area, each measured value is prefaced by certain symbol types for further description:

Measured variables

Symbol	Meaning
$\dot{V}$	Volume flow
Σ	Totalizer The measurement channel number indicates which of the three totalizers is displayed.

Measurement channel numbers

Symbol	Meaning
1 ... 4	Measurement channel 1 to 4
The measurement channel number is displayed only if more than one channel is present for the same measured variable type (e.g. Totalizer 1 to 3).	

Diagnostic behavior

The diagnostic behavior pertains to a diagnostic event that is relevant to the displayed measured variable. For information on the symbols (→ 112)

The number and display format of the measured values can be configured via the **"Format display" parameter**(→ 71). "Operation" menu → Display → Format display

8.3.2 Navigation view

In the submenu	In the wizard
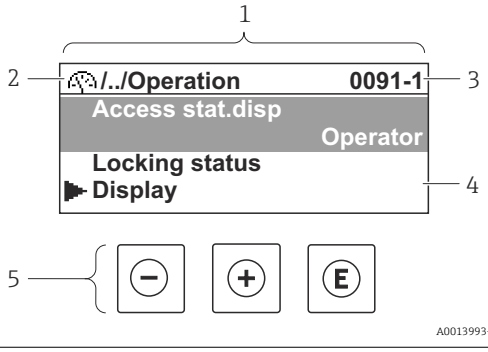	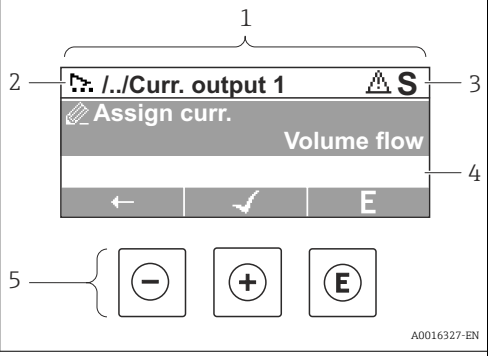

1 Navigation view
2 Navigation path to current position
3 Status area
4 Display area for navigation
5 Operating elements (→ 49)

Navigation path

The navigation path - displayed at the top left in the navigation view - consists of the following elements:

▪ In the submenu: Display symbol for menu ▪ In the wizard: Display symbol for wizard	Omission symbol for operating menu levels in between	Name of current ▪ Submenu ▪ Wizard ▪ Parameter
↓	↓	↓

Examples		/ ../	**Display**
		/ ../	**Display**

For more information about the menu icons, refer to the "Display area" section (→ 46)

Status area

The following appears in the status area of the navigation view in the top right corner:
- Of the submenu
  - The direct access code for the parameter you are navigating to (e.g. 0022-1)
  - If a diagnostic event is present, the diagnostic behavior and status signal
- In the wizard
  If a diagnostic event is present, the diagnostic behavior and status signal

- For information on the diagnostic behavior and status signal (→ 111)
- For information on the function and entry of the direct access code (→ 51)

Display area

Menus

Symbol	Meaning
	Operation Appears: ▪ In the menu next to the "Operation" selection ▪ At the left in the navigation path in the "Operation" menu
	Setup Appears: ▪ In the menu next to the "Setup" selection ▪ At the left in the navigation path in the "Setup" menu
	Diagnostics Appears: ▪ In the menu next to the "Diagnostics" selection ▪ At the left in the navigation path in the "Diagnostics" menu
	Expert Appears: ▪ In the menu next to the "Expert" selection ▪ At the left in the navigation path in the "Expert" menu

Submenus, wizards, parameters

Symbol	Meaning
	Submenu
	Wizard
	Parameters within a wizard No display symbol exists for parameters in submenus.

Locking

Symbol	Meaning
	Parameter locked When displayed in front of a parameter name, indicates that the parameter is locked. ▪ By a user-specific access code (→ 🖹 96) ▪ By the hardware write protection switch (→ 🖹 97)

Wizard operation

Symbol	Meaning
	Switches to the previous parameter.
	Confirms the parameter value and switches to the next parameter.
E	Opens the editing view of the parameter.

8.3.3 Editing view

Numeric editor	Text editor
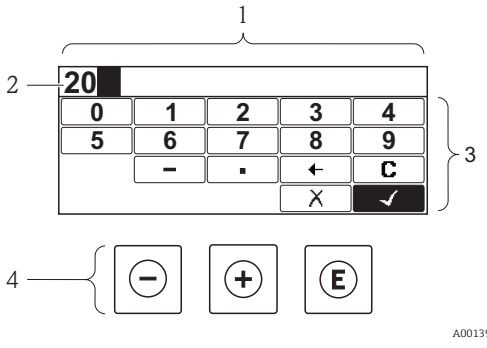	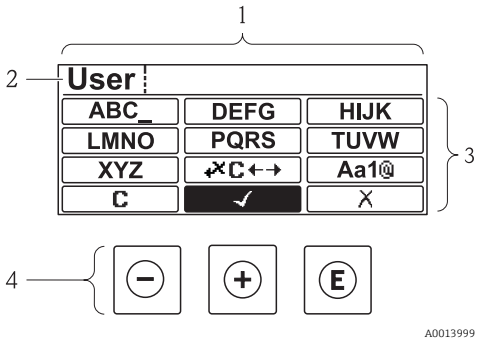

1 Editing view
2 Display area of the entered values
3 Input mask
4 Operating elements (→ 🖹 49)

Input mask

The following input symbols are available in the input mask of the numeric and text editor:

Numeric editor

Symbol	Meaning
0 … 9	Selection of numbers from 0 to 9.
.	Inserts decimal separator at the input position.
–	Inserts minus sign at the input position.
	Confirms selection.
	Moves the input position one position to the left.

X	Exits the input without applying the changes.
C	Clears all entered characters.

Text editor

Symbol	Meaning
Aa1@	Toggle ▪ Between upper-case and lower-case letters ▪ For entering numbers ▪ For entering special characters
ABC_ ... XYZ	Selection of letters from A to Z.
abc _ ... xyz	Selection of letters from a to z.
'"^ _ ... ~& _	Selection of special characters.
✓	Confirms selection.
↵C↔	Switches to the selection of the correction tools.
X	Exits the input without applying the changes.
C	Clears all entered characters.

Correction symbols under ↵C↔

Symbol	Meaning
C	Clears all entered characters.
→	Moves the input position one position to the right.
←	Moves the input position one position to the left.
↵	Deletes one character immediately to the left of the input position.

8.3.4 Operating elements

Key	Meaning
	Minus key *In a menu, submenu* Moves the selection bar upwards in a choose list. *With a Wizard* Confirms the parameter value and goes to the previous parameter. *With a text and numeric editor* In the input mask, moves the selection bar to the left (backwards).
	Plus key *In a menu, submenu* Moves the selection bar downwards in a choose list. *With a Wizard* Confirms the parameter value and goes to the next parameter. *With a text and numeric editor* Moves the selection bar to the right (forwards) in an input screen.
	Enter key *For operational display* ▪ Pressing the key briefly opens the operating menu. ▪ Pressing the key for 2 s opens the context menu. *In a menu, submenu* ▪ Pressing the key briefly: – Opens the selected menu, submenu or parameter. – Starts the wizard. – If help text is open, closes the help text of the parameter. ▪ Pressing the key for 2 s for parameter: If present, opens the help text for the function of the parameter. *With a Wizard* Opens the editing view of the parameter. *With a text and numeric editor* ▪ Pressing the key briefly: – Opens the selected group. – Carries out the selected action. ▪ Pressing the key for 2 s confirms the edited parameter value.
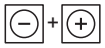	**Escape key combination (press keys simultaneously)** *In a menu, submenu* ▪ Pressing the key briefly: – Exits the current menu level and takes you to the next higher level. – If help text is open, closes the help text of the parameter. ▪ Pressing the key for 2 s returns you to the operational display ("home position"). *With a Wizard* Exits the wizard and takes you to the next higher level. *With a text and numeric editor* Closes the text or numeric editor without applying changes.
	Minus/Enter key combination (press the keys simultaneously) Reduces the contrast (brighter setting).
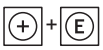	**Plus/Enter key combination (press and hold down the keys simultaneously)** Increases the contrast (darker setting).
	Minus/Plus/Enter key combination (press the keys simultaneously) *For operational display* Enables or disables the keypad lock (only SD02 display module).

8.3.5 Opening the context menu

Using the context menu, the user can call up the following menus quickly and directly from the operational display:

- Setup
- Conf. backup disp.
- Simulation

Calling up and closing the context menu

The user is in the operational display.

1. Press E for 2 s.
   ↳ The context menu opens.

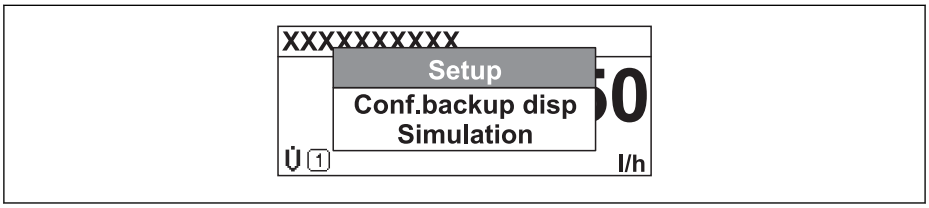

2. Press − + + simultaneously.
   ↳ The context menu is closed and the operational display appears.

Calling up the menu via the context menu

1. Open the context menu.
2. Press + to navigate to the desired menu.
3. Press E to confirm the selection.
   ↳ The selected menu opens.

8.3.6 Navigating and selecting from list

Different operating elements are used to navigate through the operating menu. The navigation path is displayed on the left in the header. Icons are displayed in front of the individual menus. These icons are also shown in the header during navigation.

For an explanation of the navigation view with symbols and operating elements (→ 45)

Example: Setting the number of displayed measured values to "2 values"

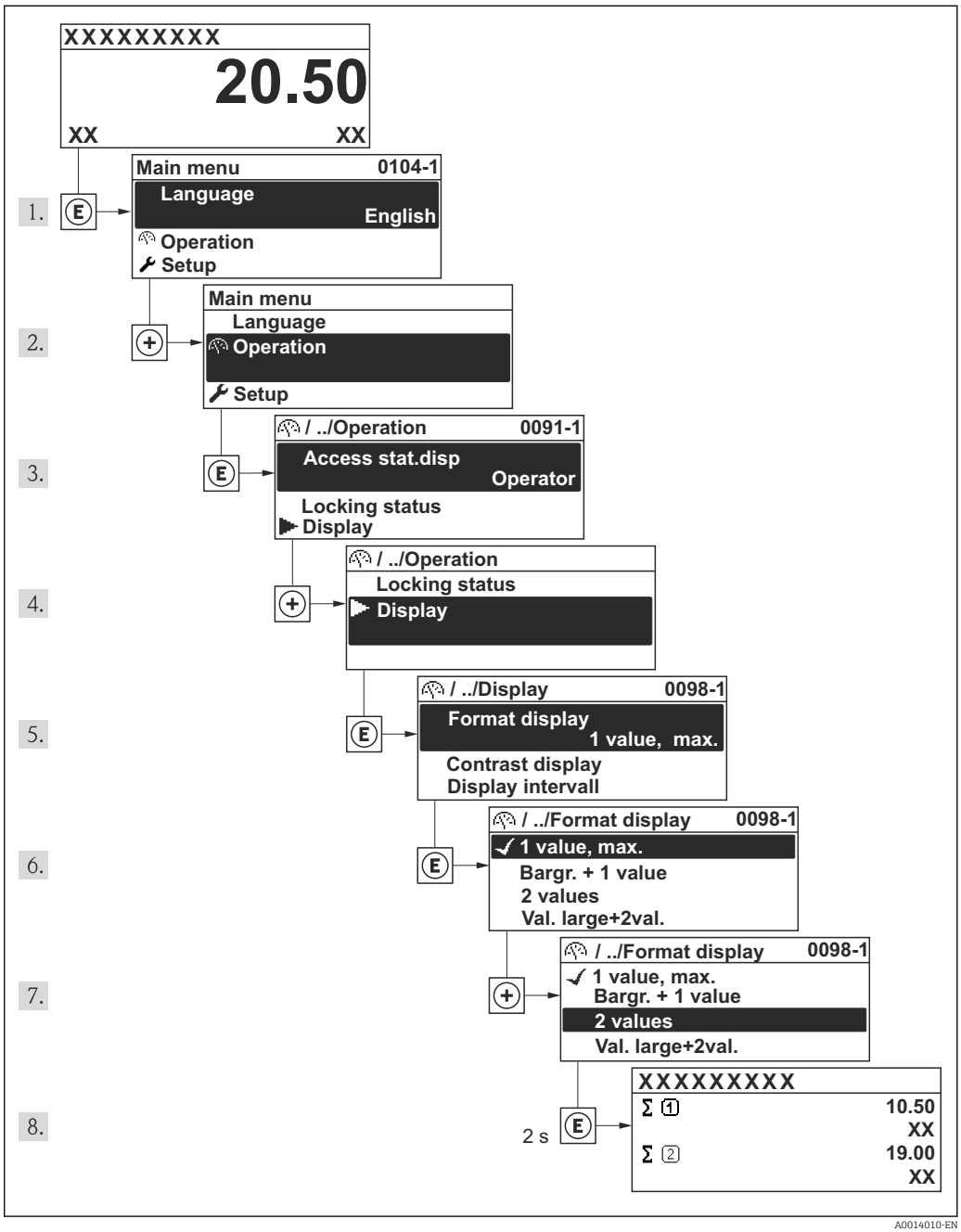

8.3.7 Calling the parameter directly

A parameter number is assigned to every parameter to be able to access a parameter directly via the onsite display. Entering this access code in the **Direct access** parameter calls up the desired parameter directly.

Navigation path
"Expert" menu → Direct access

The direct access code consists of a 4-digit number and the channel number, which identifies the channel of a process variable: e.g. 0914-1. In the navigation view, this appears on the right-hand side in the header of the selected parameter.

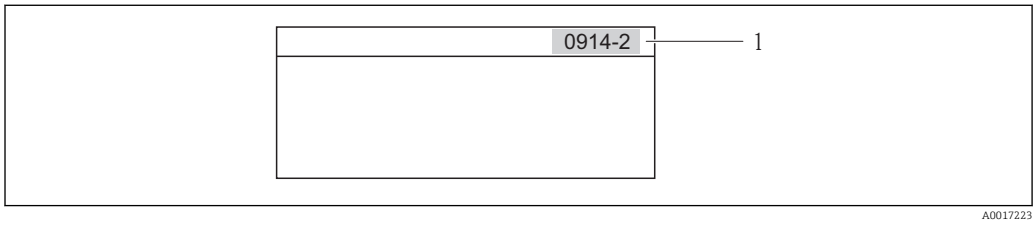

1 Direct access code

Note the following when entering the direct access code:
- The leading zeros in the direct access code do not have to be entered.
  Example: Input of "914" instead of "0914"
- If no channel number is entered, channel 1 is jumped to automatically.
  Example: Input of "0914" → Parameter **Totalizer 1**
- If a different channel is jumped to: Enter the direct access code with the corresponding channel number.
  Example: Input of "0914-2" → Parameter **Totalizer 2**

For the direct access codes of the individual parameters

8.3.8 Calling up help text

For some parameters, help texts exist, which the user can call up from the navigation view. These briefly describe the function of the parameter and thus support fast and reliable commissioning.

Calling up and closing the help text

The user is in the navigation view and the selection bar is on a parameter.

1. Press E for 2 s.
   ↳ The help text for the selected parameter opens.

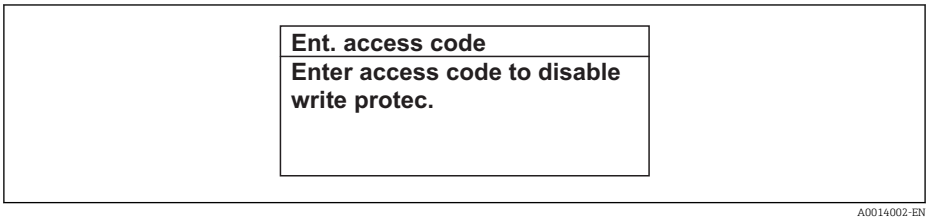

14 Example: Help text for parameter "Enter access code"

2. Press − + + simultaneously.
   ↳ The help text is closed.

8.3.9 Changing the parameters

For a description of the editing display - consisting of text editor and numeric editor - with symbols (→ 47), for a description of the operating elements (→ 49)

Example: Changing the tag name in the "Tag description" parameter from 001-FT-101 to 001-FT-102

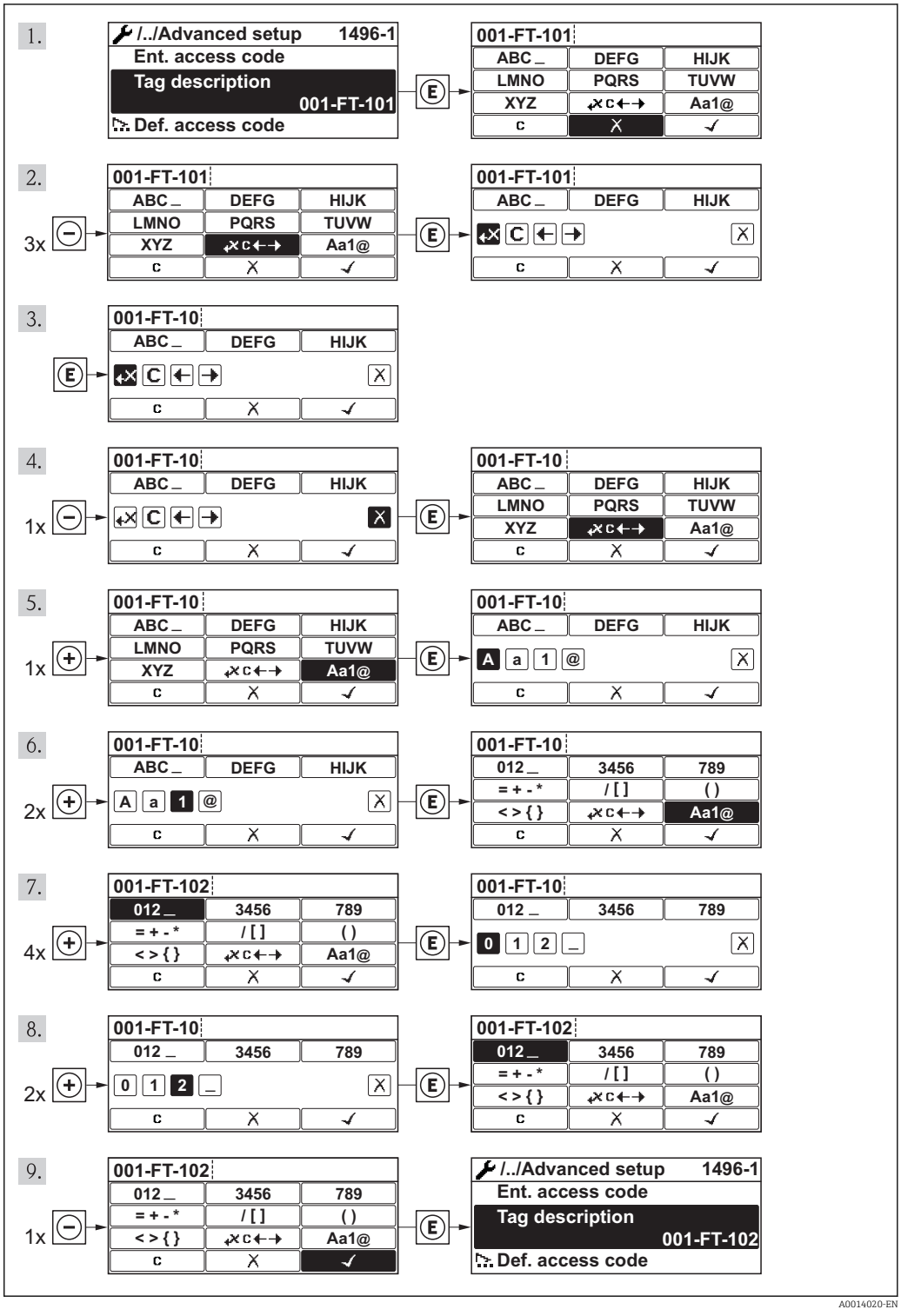

8.3.10 User roles and related access authorization

The two user roles "Operator" and "Maintenance" have different write access to the parameters if the customer defines a user-specific access code. This protects the device configuration via the local display from unauthorized access (→ 96).

Access authorization to parameters

User role	Read access		Write access	
	Without access code (from the factory)	With access code	Without access code (from the factory)	With access code
Operator	✔	✔	✔	-- [1]
Maintenance	✔	✔	✔	✔

1) Despite the defined access code, certain parameters can always be modified and thus are excepted from the write protection, as they do not affect the measurement. Refer to the "Write protection via access code" section

If an incorrect access code is entered, the user obtains the access rights of the "Operator" role.

The user role with which the user is currently logged on is indicated by the **Access status display** parameter. Navigation path: Operation → Access status display

8.3.11 Disabling write protection via access code

If the 🔒-symbol appears on the local display in front of a parameter, the parameter is write-protected by a user-specific access code and its value cannot be changed at the moment using the local display (→ 96).

The locking of the write access via local operation can be disabled by entering the customer-defined access code via the respective access option.

1. After you press E, the input prompt for the access code appears.
2. Enter the access code.
   ↳ The 🔒-symbol in front of the parameters disappears; all previously write-protected parameters are now re-enabled.

8.3.12 Enabling and disabling the keypad lock

The keypad lock makes it possible to block access to the entire operating menu via local operation. As a result, it is no longer possible to navigate through the operating menu or change the values of individual parameters. Users can only read the measured values on the operational display.

Local operation with mechanical push buttons (display module SD02)

Display module SD02: order characteristic *"Display; Operation"*, option **C**

The keypad lock is switched on and off in the same way:

Switching on the keypad lock

▶ The device is in the measured value display.
Press the − + + + E keys simultaneously.
↳ The message **Keylock on** appears on the display: The keypad lock is switched on.

If the user attempts to access the operating menu while the keypad lock is active, the message **Keylock on** appears.

Switching off the keypad lock

▶ The keypad lock is switched on.
Press the ⊟ + ⊞ + Ⓔ keys simultaneously.
↳ The message **Keylock off** appears on the display: The keypad lock is switched off.

Local operation with touch control (display module SD03)

Display module SD03: Order characteristic *"Display; Operation"*, option **E**

The keypad lock is switched on and off via the context menu.

Switching on the keypad lock

The keypad lock is switched on automatically:
- Each time the device is restarted.
- If the device has not been operated for longer than one minute in the measured value display.

1. The device is in the measured value display.
Press the Ⓔ key for longer than 2 seconds.
↳ A context menu appears.
2. In the context menu, select the **Keylock on** option.
↳ The keypad lock is switched on.

If the user attempts to access the operating menu while the keypad lock is active, the message **Keylock on** appears.

Switching off the keypad lock

1. The keypad lock is switched on.
Press the Ⓔ key for longer than 2 seconds.
↳ A context menu appears.
2. In the context menu, select the **Keylock off** option.
↳ The keypad lock is switched off.

8.4 Access to the operating menu via the operating tool

The structure of the operating menu in the operating tools is the same as for operation via the local display.

8.4.1 Connecting the operating tool

Via FOUNDATION Fieldbus network

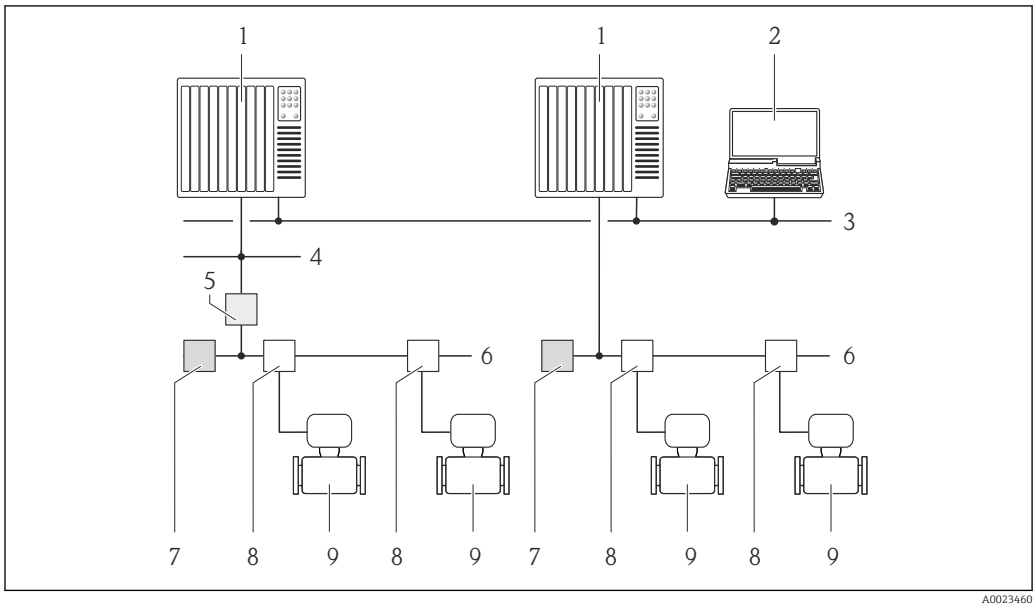

1 *Automation system*
2 *Computer with FOUNDATION Fieldbus network card*
3 *Industry network*
4 *High Speed Ethernet FF-HSE network*
5 *Segment coupler FF-HSE/FF-H1*
6 *FOUNDATION Fieldbus FF-H1 network*
7 *Power supply FF-H1 network*
8 *T-box*
9 *Measuring device*

Via service interface (CDI)

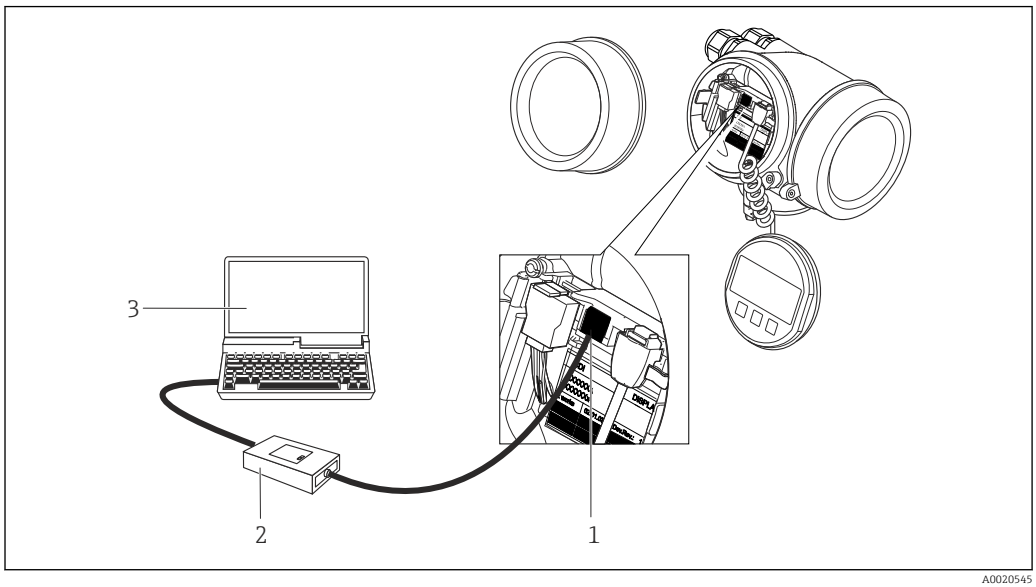

1 *Service interface (CDI = Endress+Hauser Common Data Interface) of the measuring device*
2 *Commubox FXA291*
3 *Computer with "FieldCare" operating tool with COM DTM "CDI Communication FXA291"*

8.4.2 Field Xpert SFX350, SFX370

Function scope

Field Xpert SFX350 and Field Xpert SFX370 are mobile computers for commissioning and maintenance. They enable efficient device configuration and diagnostics for HART and FOUNDATION fieldbus devices in the **non-Ex area** (SFX350, SFX370) and the **Ex area** (SFX370).

For details, see Operating Instructions BA01202S

Source for device description files

See data (→ 59)

8.4.3 FieldCare

Function scope

FDT-based plant asset management tool from Endress+Hauser. It can configure all smart field devices in a system and helps you manage them. By using the status information, it is also a simple but effective way of checking their status and condition.

Access takes place via:

Typical functions:
- Configuring parameters of transmitters
- Loading and saving device data (upload/download)
- Documentation of the measuring point
- Visualization of the measured value memory (line recorder) and event logbook

For details, see Operating Instructions BA00027S and BA00059S

Source for device description files

See data (→ 59)

User interface

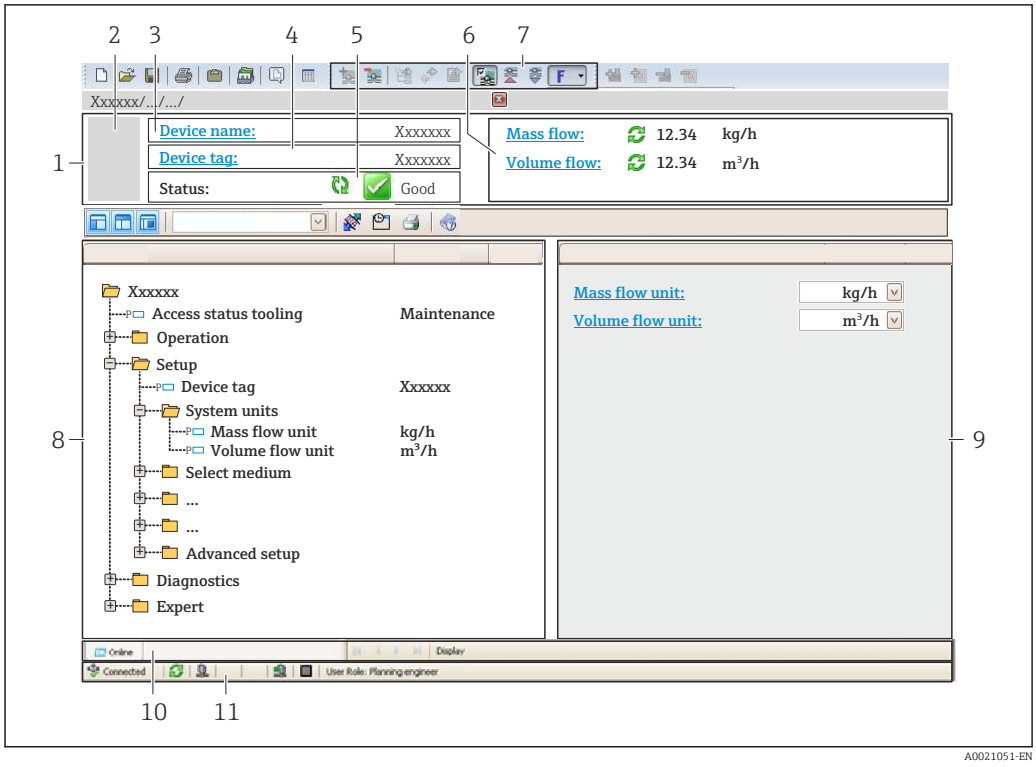

1 *Header*
2 *Picture of device*
3 *Device name*
4 *Device tag (→ 65)*
5 *Status area with status signal*
6 *Display area for current measured values*
7 *Event list with additional functions such as save/load, events list and document creation*
8 *Navigation area with operating menu structure*
9 *Operating range*
10 *Range of action*
11 *Status area*

8.4.4 AMS Device Manager

Function scope

Program from Emerson Process Management for operating and configuring measuring devices via FOUNDATION Fieldbus H1 protocol.

Source for device description files

See data (→ 59)

8.4.5 Field Communicator 475

Function scope

Industrial handheld terminal from Emerson Process Management for remote configuration and measured value display via FOUNDATION Fieldbus H1 protocol.

Source for device description files

See data (→ 59)

9 System integration

9.1 Overview of device description files

9.1.1 Current version data for the device

Manufacturer ID	452B48 hex	**Manufacturer ID** parameter Diagnostics → Device info→ Manufacturer ID
Device type ID	0x1038	**Device type** parameter Diagnostics → Device info → Device type
Device revision	1	▪ On transmitter nameplate (→ 🖹 13) ▪ **Device revision** parameter Diagnostics → Device info → Device revision
DD revision	Information and files under: ▪ www.endress.com ▪ www.fieldbus.org	
CFF revision		

9.1.2 Operating tools

The suitable device description file for the individual operating tools is listed in the table below, along with information on where the file can be acquired.

Operating tool via FOUNDATION Fieldbus	Sources for obtaining device descriptions
▪ Field Xpert SFX350 ▪ Field Xpert SFX370	Use update function of handheld terminal
FieldCare	▪ www.endress.com → Download Area ▪ CD-ROM (contact Endress+Hauser) ▪ DVD (contact Endress+Hauser)
AMS Device Manager (Emerson Process Management)	www.endress.com → Download Area
Field Communicator 475 (Emerson Process Management)	Use update function of handheld terminal

9.2 Integration into a FOUNDATION Fieldbus network

9.2.1 Block model

- Resource Block
- Transducer Blocks
  - Setup Transducer Block
  - Advanced Setup Transducer Block
  - Display Transducer Block
  - HistoROM Transducer Block
  - Diagnostic Transducer Block
  - Expert Configuration Transducer Block
  - Expert Information Transducer Block
  - Total Inventory Counter Transducer Block
  - Service Sensor Transducer Block
  - Service Info Transducer Block
  - Heartbeat Technology Transducer Block
  - Heartbeat Results 1 Transducer Block
  - Heartbeat Results 2 Transducer Block
  - Heartbeat Results 3 Transducer Block
  - Heartbeat Results 4 Transducer Block
- Function blocks
  - Analog Input Block
  - Discrete Input Block
  - PID Block
  - Multiple Analog Output Block
  - Multiple Digital Output Block
  - Integrator Block

Technical values for the individual blocks (→ 142)

9.2.2 Assignment of the measured values in the function blocks

The input value of a function block is defined via the CHANNEL parameter.

Analog Input (AI)

Channel	Measured variable
7	Temperature
9	Volume flow
11	Mass flow
13	Corrected volume flow
16	Totalizer 1
17	Totalizer 2
18	Totalizer 3
37	Flow velocity
38	Energy flow
45	Calculated saturated steam pressure
46	Total mass flow
47	Condensate mass flow
48	Steam quality

Channel	Measured variable
49	Heat flow difference
50	Reynolds number

Digital Input (DI)

Channel	Signal
101	Status switch output
103	Low flow cut off
105	Status verification

Multiple Analog Output Block (MAO)

Structure

Channel_0							
Value 1	Value 2	Value 3	Value 4	Value 5	Value 6	Value 7	Value 8

Channel	Measured variable	
121	Channel_0	
	Value 1:	External compensation variables: pressure, gage pressure, density, temperature or second temperature [1]
	Value 2:	Not assigned
	Value 3:	
	Value 4:	
	Value 5:	
	Value 6:	
	Value 7:	
	Value 8:	

1) The compensation variables must be transmitted to the device in the SI basic unit.

The measured variable is accessed via "Setup" menu → Advanced setup → External compensation.

Multiple Digital Output Block (MDO)

Structure

Channel_DO							
Value 1	Value 2	Value 3	Value 4	Value 5	Value 6	Value 7	Value 8

Channel	Measured variable	
122	Channel_DO	
	Value 1:	Reset totalizer 1
	Value 2:	Reset totalizer 2
	Value 3:	Reset totalizer 3
	Value 4:	Flow override

Channel	Measured variable	
	Value 5:	Start heartbeat verification
	Value 6:	Status switch output
	Value 7:	Not assigned
	Value 8:	Not assigned

9.2.3 Index tables of Endress+Hauser parameters

(→ 162)

9.2.4 Methods

Method	Block / accessibility via menu	Description
Set to "AUTO" mode	Block: – Accessibility via menu: Configure/Setup → Expert → Block Mode → Resource & Transducer Blocks	This method sets the Resource Block and all the Transducer Blocks to the AUTO (Automatic) mode.
Set to "OOS" mode	Block: – Accessibility via menu: Configure/Setup → Expert → Block Mode → Resource & Transducer Blocks	This method sets the Resource Block and all the Transducer Blocks to the OOS (Out of service) mode.
Restart	Block: Resource Block Accessibility via menu: Actions → Methods → Calibrate → Restart	This method is used for selecting the setting for the restart parameter in the Resource Block. This resets device parameters to a specific value. The following options are supported: ▪ Uninitialized ▪ Run ▪ Resource ▪ Defaults ▪ Processor ▪ To factory defaults ▪ To delivery settings ▪ ENP restart ▪ To transducer defaults ▪ Factory default blocks
ENP parameter	Block: Resource Block Accessibility via menu: Actions → Methods → Calibrate → ENP parameter	This method is used to display and configure the parameters of the electronic nameplate (ENP).
Overview diagnostics - Remedy information	Block: Diagnostic Transducer Block Accessibility via link: Namur symbol	This method is used to display the diagnostic event with the highest priority that is currently active and the corresponding remedial measures.
Actual diagnostics – Remedy information	Block: Diagnostic Transducer Block Accessibility via menu: Configure/Setup → Diagnostics → Actual diagnostics Alternatively accessible via menu: Device/ Diagnostics → Diagnostics	This method is used to display remedial measures for the diagnostic event with the highest priority that is currently active. This method is only available if an appropriate diagnostic event has occurred.
Previous diagnostics – Remedy information	Block: Diagnostic Transducer Block Accessibility via menu: Configure/Setup → Diagnostics → Previous diagnostics Alternatively accessible via menu: Device/ Diagnostics → Diagnostics	This method is used to display remedial measures for the previous diagnostic event. This method is only available if an appropriate diagnostic event has occurred.

Method	Block / accessibility via menu	Description
Diagnostics 1 – Remedy information	Block: Diagnostic Transducer Block Accessibility via menu: Configure/Setup → Diagnostics → Diagnostic list → Diagnostics 1 Alternatively accessible via menu: ▪ Device/Diagnostics → Diagnostics list ▪ Instrument health status → Diagnostic list	This method is used to display remedial measures for the diagnostic event with the highest priority that is currently active. This method is only available if an appropriate diagnostic event has occurred.
Diagnostics 2 – Remedy information	Block: Diagnostic Transducer Block Accessibility via menu: Configure/Setup → Diagnostics → Diagnostic list → Diagnostics 2 Alternatively accessible via menu: ▪ Device/Diagnostics → Diagnostics list ▪ Instrument health status → Diagnostic list	This method is used to display remedial measures for an additional active diagnostic event. This method is only available if an appropriate diagnostic event has occurred.
Diagnostics 3 – Remedy information	Block: Diagnostic Transducer Block Accessibility via menu: Configure/Setup → Diagnostics → Diagnostic list → Diagnostics 3 Alternatively accessible via menu: ▪ Device/Diagnostics → Diagnostics list ▪ Instrument health status → Diagnostic list	This method is used to display remedial measures for an additional active diagnostic event. This method is only available if an appropriate diagnostic event is present.
Diagnostics 4 – Remedy information	Block: Diagnostic Transducer Block Accessibility via menu: Configure/Setup → Diagnostics → Diagnostic list → Diagnostics 4 Alternatively accessible via menu: ▪ Device/Diagnostics → Diagnostics list ▪ Instrument health status → Diagnostic list	This method is used to display remedial measures for an additional active diagnostic event. This method is only available if an appropriate diagnostic event has occurred.
Diagnostics 5 – Remedy information	Block: Diagnostic Transducer Block Accessibility via menu: Configure/Setup → Diagnostics → Diagnostic list → Diagnostics 5 Alternatively accessible via menu: ▪ Device/Diagnostics → Diagnostics list ▪ Instrument health status → Diagnostic list	This method is used to display remedial measures for an additional active diagnostic event. This method is only available if an appropriate diagnostic event has occurred.
Diagnostic list	Block: Diagnostic Transducer Block Accessibility via menu: Configure/Setup → Diagnostics → Alarm indication (polling) Alternatively accessible via menu: ▪ Device/Diagnostics → Alarm indication (Polling) ▪ Instrument health status → Diagnostic list	This method is used to display up to five pending diagnostic events and the related remedial measures.

10 Commissioning

10.1 Function check

Before commissioning the device, make sure that the post-installation and post-connection checks have been performed.

- "Post-installation check" checklist (→ 28)
- "Post-connection check" checklist (→ 41)

10.2 Switching on the measuring device

After a successful function check, switch on the measuring device.

After a successful startup, the local display switches automatically from the startup display to the operational display.

If nothing appears on the local display or a diagnostic message is displayed, refer to the section on "Diagnostics and troubleshooting" (→ 109).

10.3 Setting the operating language

Factory setting: English or ordered local language

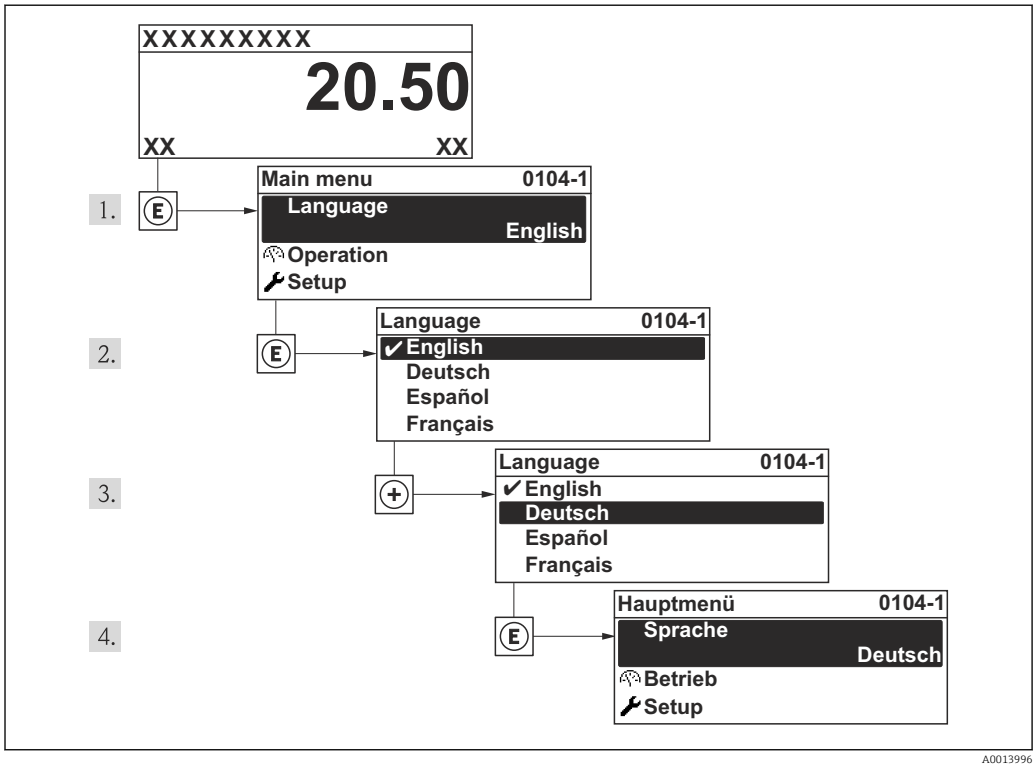

15 *Using the example of the local display*

10.4 Configuring the measuring device

The **Setup** menu with its guided wizards contains all the parameters needed for standard operation.

Navigation to the **Setup** menu

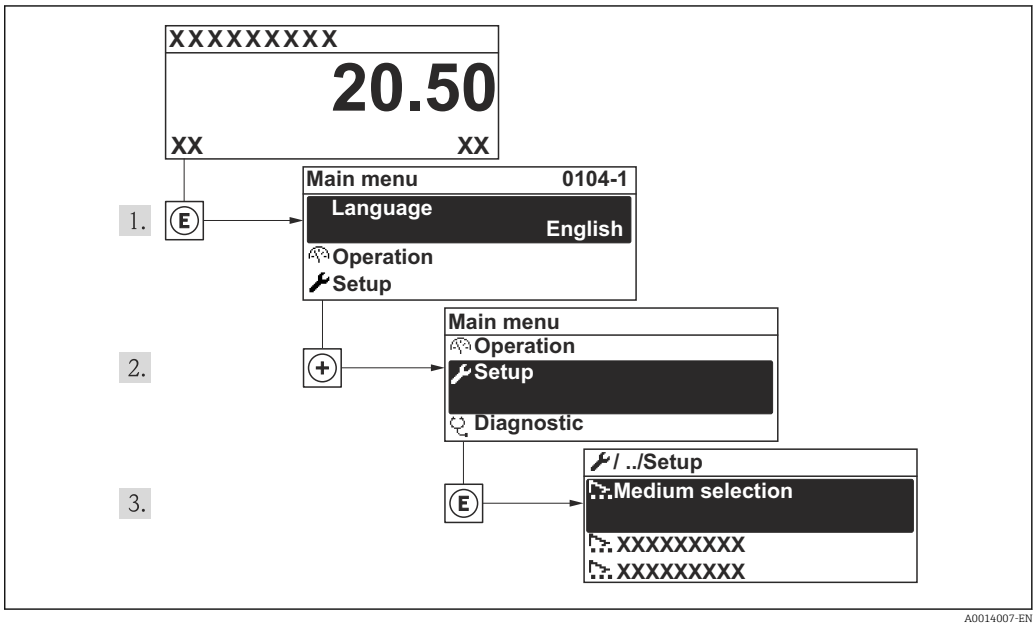

16 *Using the example of the local display*

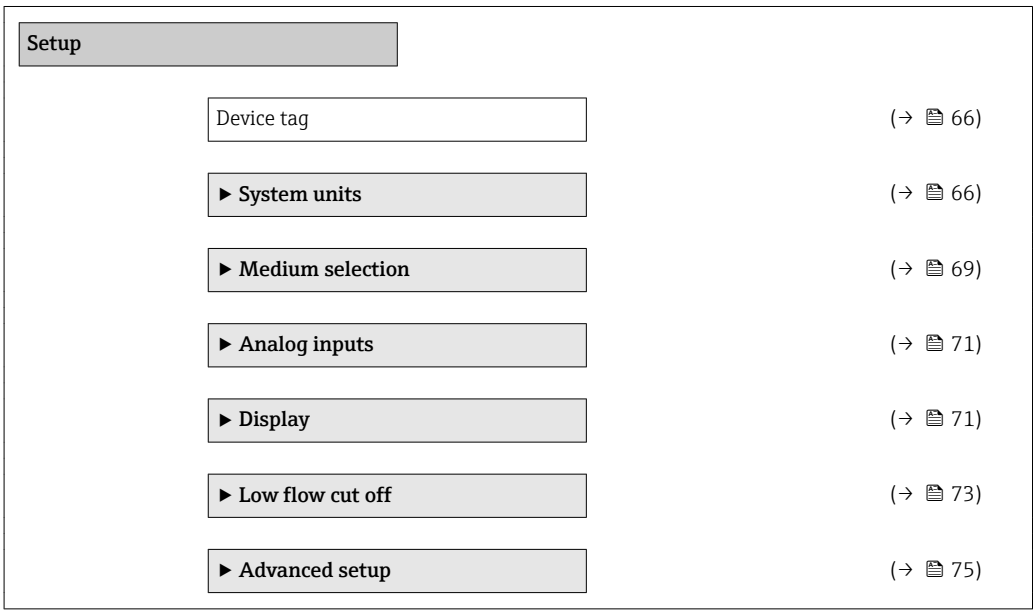

10.4.1 Defining the tag name

To enable fast identification of the measuring point within the system, you can enter a unique designation using the **Device tag** parameter and thus change the factory setting.

The number of characters displayed depends on the characters used.

For information on the tag name in the "FieldCare" operating tool (→ 58)

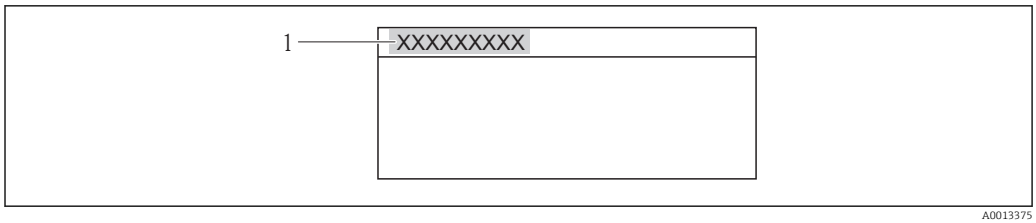

17 Header of the operational display with tag name

1 Device tag

Navigation
"Setup" menu → Device tag

Parameter overview with brief description

Parameter	Description	User entry	Factory setting
Device tag	Enter the name for the measuring point.	Max. 32 characters, such as letters, numbers or special characters (e.g. @, %, /)	Prowirl 200

10.4.2 Setting the system units

In the **System units** submenu the units of all the measured values can be set.

Navigation
"Setup" menu → System units

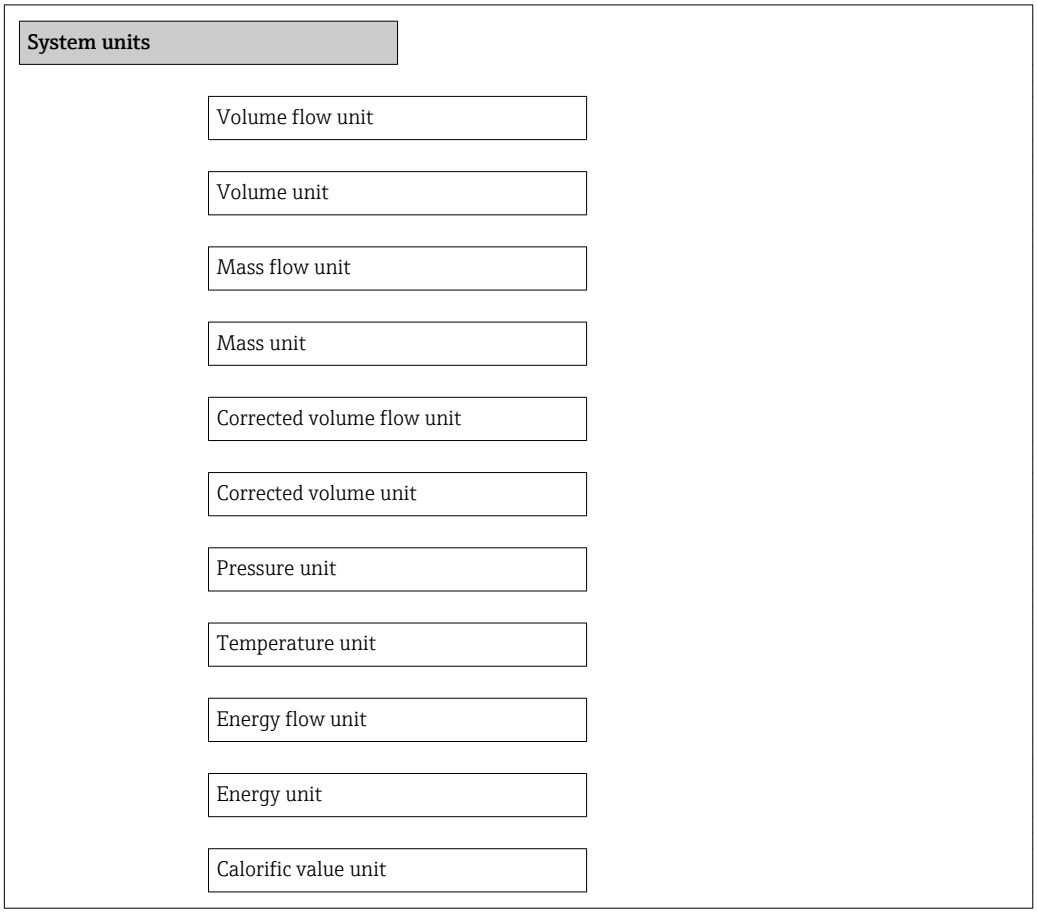

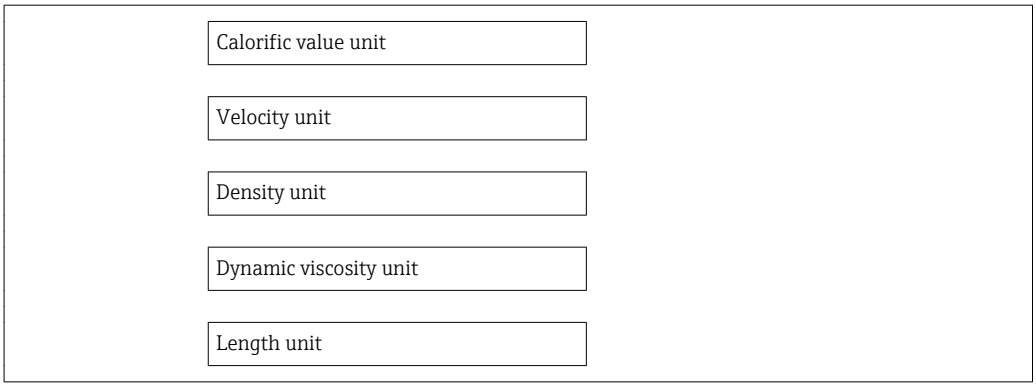

Parameter overview with brief description

Parameter	Description	Selection	Factory setting
Volume flow unit	Select volume flow unit. *Result* The selected unit applies for: ▪ Output ▪ Low flow cut off ▪ Simulation process variable	Unit choose list	Country-specific: ▪ l/h ▪ gal/min (us)
Volume unit	Select volume unit. **Result** The selected unit is taken from: **Volume flow unit** parameter	Unit choose list	Country-specific: ▪ l ▪ gal (us)
Mass flow unit	Select mass flow unit. *Result* The selected unit applies for: ▪ Output ▪ Low flow cut off ▪ Simulation process variable	Unit choose list	Country-specific: ▪ kg/h ▪ lb/min
Mass unit	Select mass unit. *Result* The selected unit is taken from: **Mass flow unit** parameter	Unit choose list	Country-specific: ▪ kg ▪ lb
Corrected volume flow unit	Select corrected volume flow unit. *Result* The selected unit applies for: ▪ Output ▪ Low flow cut off ▪ Simulation process variable	Unit choose list	Country-specific: ▪ Nl/h ▪ Sft^3/h
Corrected volume unit	Select corrected volume unit. **Result** The selected unit is taken from: **Corrected volume flow unit** parameter	Unit choose list	Country-specific: ▪ Nl ▪ Sft^3
Pressure unit	Select process pressure unit.	Unit choose list	Country-specific: ▪ bar ▪ psi
Temperature unit	Select temperature unit. *Result* The selected unit applies for: ▪ Output ▪ Reference temperature ▪ Simulation process variable	Unit choose list	Country-specific: ▪ °C (Celsius) ▪ °F (Fahrenheit)

Parameter	Description	Selection	Factory setting
Energy flow unit	Select energy flow unit. *Result* The selected unit applies for: ▪ Outputs ▪ Low flow cut off	Unit choose list	Country-specific: ▪ kW ▪ Btu/h
Energy unit	Select energy unit.	Unit choose list	Country-specific: ▪ kWh ▪ Btu
Calorific value unit	Select calorific value unit.	Unit choose list	Country-specific: ▪ kWh/Nm³ ▪ Btu/Sft³
Calorific value unit	Select calorific value unit.	Unit choose list	Country-specific: ▪ kJ/kg ▪ Btu/lb
Velocity unit	Select velocity unit.	Unit choose list	Country-specific: ▪ m/s ▪ ft/s
Density unit	Select density unit. *Result* The selected unit applies for: ▪ Output ▪ Simulation process variable ▪ Density adjustment (in **Expert** menu)	Unit choose list	Country-specific: ▪ kg/l ▪ lb/ft³
Dynamic viscosity unit	Select dynamic viscosity unit.	Unit choose list	Pa s
Length unit	Select length unit for nominal diameter.	Unit choose list	Country-specific: ▪ mm ▪ in

10.4.3 Selecting and setting the medium

The **Medium selection** wizard guides you systematically through all the parameters that have to be configured for selecting and setting the medium.

Navigation
"Setup" menu → Medium selection

Structure of the wizard

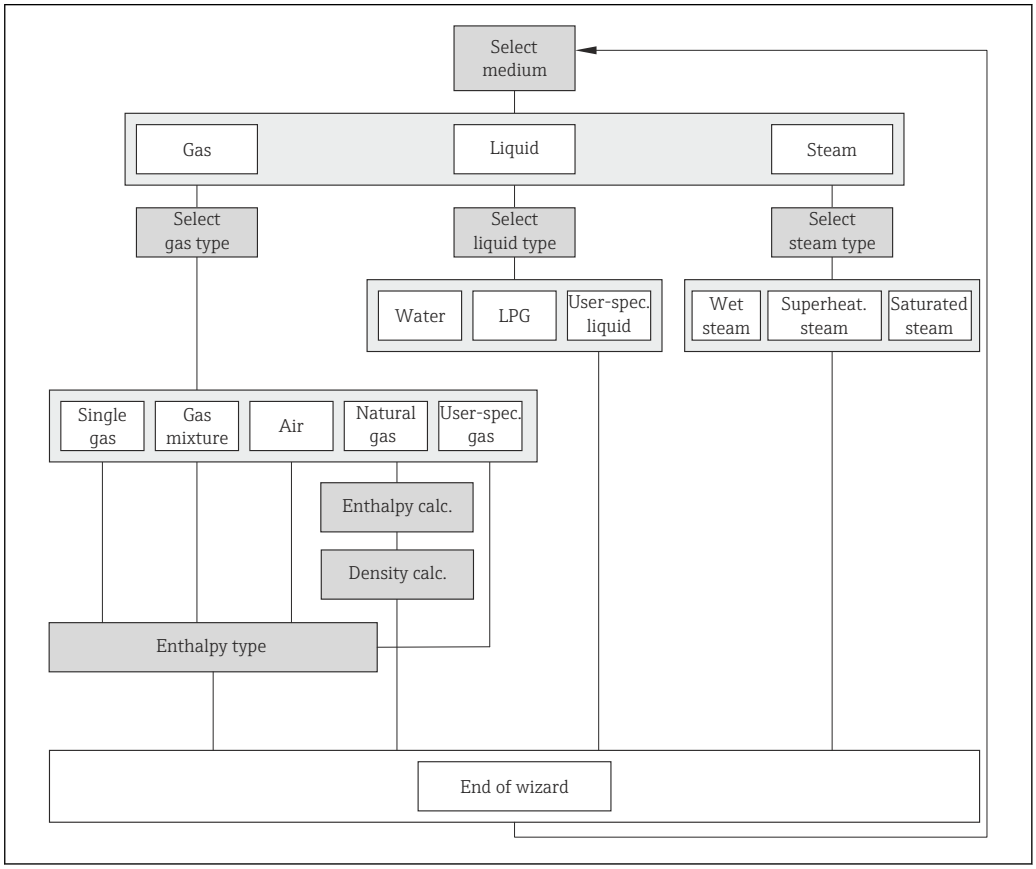

18 *"Medium selection" wizard in the "Setup" menu*

Parameter overview with brief description

Parameter	Prerequsite	Description	Selection	Factory setting
Select medium	–	Select medium type.	▪ Gas ▪ Liquid ▪ Steam	Steam
Select gas type	For the following order codes: ▪ *"Sensor version", option "Mass flow"* ▪ *"Application package ", option "Air + Industrial gases" or option "Natural gas"* In the **Select medium** parameter the **Gas** option must be selected.	Select measured gas type.	▪ Single gas ▪ Gas mixture ▪ Air ▪ Natural gas ▪ User-specific gas	User-specific gas

Parameter	Prerequsite	Description	Selection	Factory setting
Select liquid type	For the following order code: *"Sensor version", option "Mass flow"* In the **Select medium** parameter the **Liquid** option must be selected.	Select measured liquid type.	▪ Water ▪ LPG ▪ User-specific liquid	Water
Select steam type	For the following order codes: *"Sensor version", option "Mass flow (integrated temperature measurement)"* In the **Select medium** parameter the **Steam** option must be selected.	Select measured steam type.	▪ Wet steam ▪ Superheated steam ▪ Saturated steam	Saturated steam
Enthalpy calculation	For the following order codes: ▪ *"Sensor version", option "Mass flow (integrated temperature measurement)"* ▪ *"Application package ", option "Natural gas"* In the **Select medium** parameter the **Gas** option must be selected and in the **Select gas type** parameter the **Natural gas** option must be selected.	Select the norm the enthalpy calculation is based on.	▪ AGA5 ▪ ISO 6976	AGA5
Density calculation	In the **Select medium** parameter the **Gas** option must be selected and in the **Select gas type** parameter the **Natural gas** option must be selected.	Select the norm the density calculation is based on.	▪ AGA Nx19 ▪ ISO 12213- 2 ▪ ISO 12213- 3	AGA Nx19
Enthalpy type	For the following order codes: *"Sensor version", option "Mass flow (integrated temperature measurement)"* In the **Select medium** parameter the **Gas** option must be selected and in the **Select gas type** parameter the **User-specific gas** option must be selected.	Define which kind of enthalpy is used.	▪ Heat ▪ Calorific value	Heat

10.4.4 Configuring the analog inputs

The **Analog inputs** submenu guides you systematically to the individual **Analog input 1 to 4** submenu. From here you get to the parameters of the individual analog input.

Navigation
"Setup" menu → Analog inputs

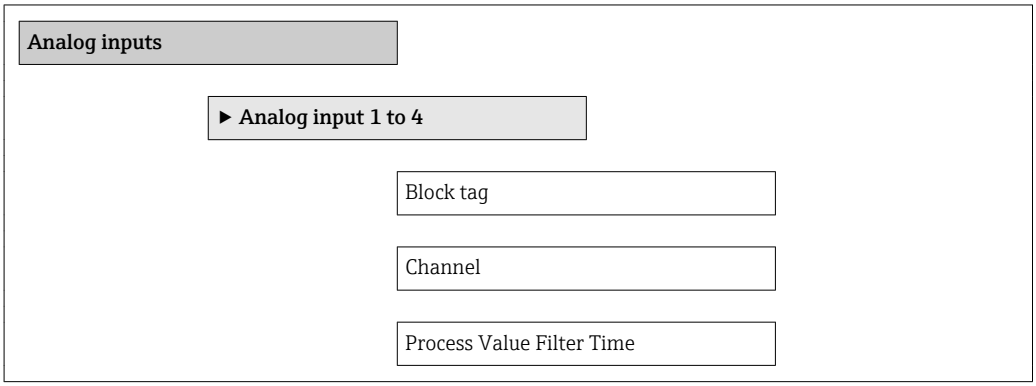

Parameter overview with brief description

Parameter	Description	User entry / Selection	Factory setting
Block tag	Unique name of the measuring device.	Character string composed of letters, numbers and certain punctuation marks.	–
Channel	Select the process variable.	▪ Uninitialized ▪ Mass flow ▪ Flow velocity ▪ Volume flow ▪ Corrected volume flow ▪ Temperature ▪ Calculated saturated steam pressure ▪ Steam quality ▪ Total mass flow ▪ Condensate mass flow ▪ Energy flow ▪ Heat flow difference ▪ Reynolds number ▪ Totalizer 1 ▪ Totalizer 2 ▪ Totalizer 3	Uninitialized
Process Value Filter Time	Specify a time to suppress signal peaks. During the specified time the totalizer does not respond to an erratic increase in the process variable.	Positive floating-point number	0 s

10.4.5 Configuring the local display

The **Display** wizard guides you systematically through all the parameters that can configured for configuring the local display.

Navigation
"Setup" menu → Display

Structure of the wizard

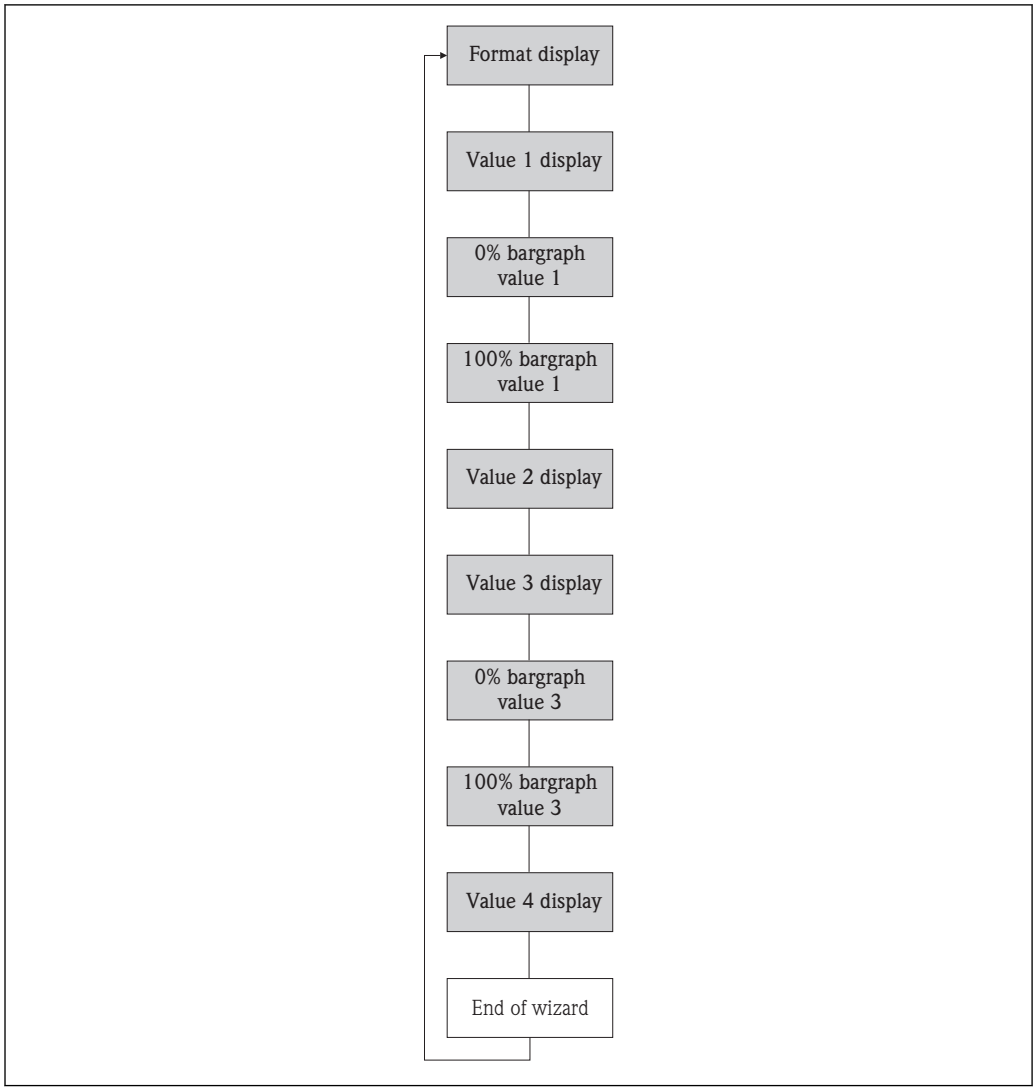

19 "Display" wizard in the "Setup" menu

Parameter overview with brief description

Parameter	Description	Selection / User entry	Factory setting
Format display	Select how measured values are shown on the display.	▪ 1 value, max. size ▪ 1 bargraph + 1 value ▪ 2 values ▪ 1 value large + 2 values ▪ 4 values	1 value, max. size
Value 1 display	Select the measured value that is shown on the local display.	▪ Volume flow ▪ Corrected volume flow ▪ Mass flow ▪ Flow velocity ▪ Temperature ▪ Calculated saturated steam pressure ▪ Steam quality ▪ Total mass flow ▪ Condensate mass flow ▪ Energy flow ▪ Heat flow difference ▪ Reynolds number ▪ Density ▪ Totalizer 1 ▪ Totalizer 2 ▪ Totalizer 3	Volume flow
0% bargraph value 1	Enter 0% value for bar graph display.	Signed floating-point number	0 m^3/h
100% bargraph value 1	Enter 100% value for bar graph display.	Signed floating-point number	1 m^3/h
Value 2 display	Select the measured value that is shown on the local display.	Picklist (see 1st display value)	None
Value 3 display	Select the measured value that is shown on the local display.	Picklist (see 1st display value)	None
0% bargraph value 3	Enter 0% value for bar graph display.	Signed floating-point number	0
100% bargraph value 3	Enter 100% value for bar graph display.	Signed floating-point number	0
Value 4 display	Select the measured value that is shown on the local display.	Picklist (see 1st display value)	None

10.4.6 Configuring the low flow cut off

The **Low flow cut off** wizard guides you systematically through all the parameters that have to be set for configuring the low flow cut off.

Navigation
"Setup" menu → Low flow cut off

Structure of the wizard

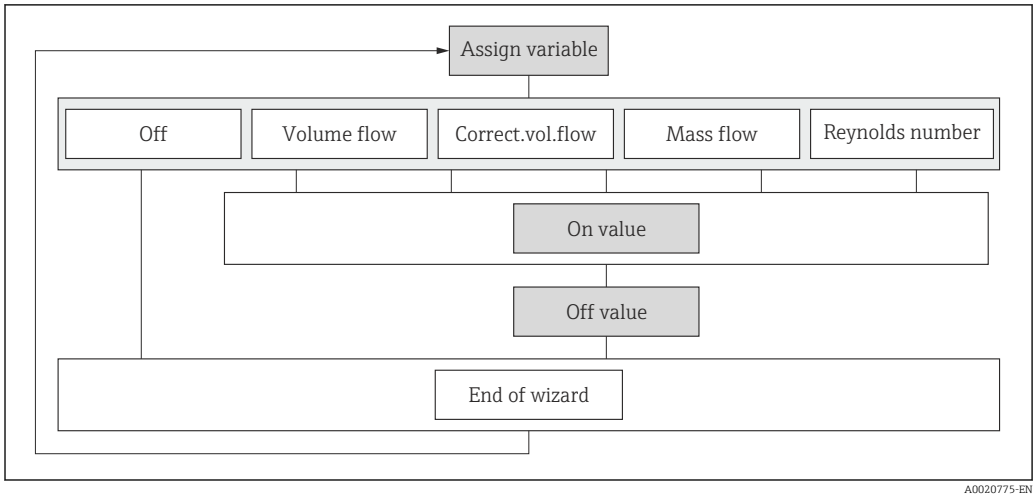

20 *"Low flow cut off" wizard in the "Setup" menu*

Parameter overview with brief description

Parameter	Description	Selection / User entry	Factory setting
Assign process variable	Select process variable for low flow cut off.	▪ Off ▪ Volume flow ▪ Corrected volume flow ▪ Mass flow ▪ Reynolds number	Off
On value low flow cutoff	Enter on value for low flow cut off.	Positive floating-point number	0
Off value low flow cutoff	Enter off value for low flow cut off.	0 to 100.0 %	50 %

10.5 Advanced settings

The **Advanced setup** submenu with its submenus contains parameters for specific settings.

Navigation to the "Advanced setup" submenu

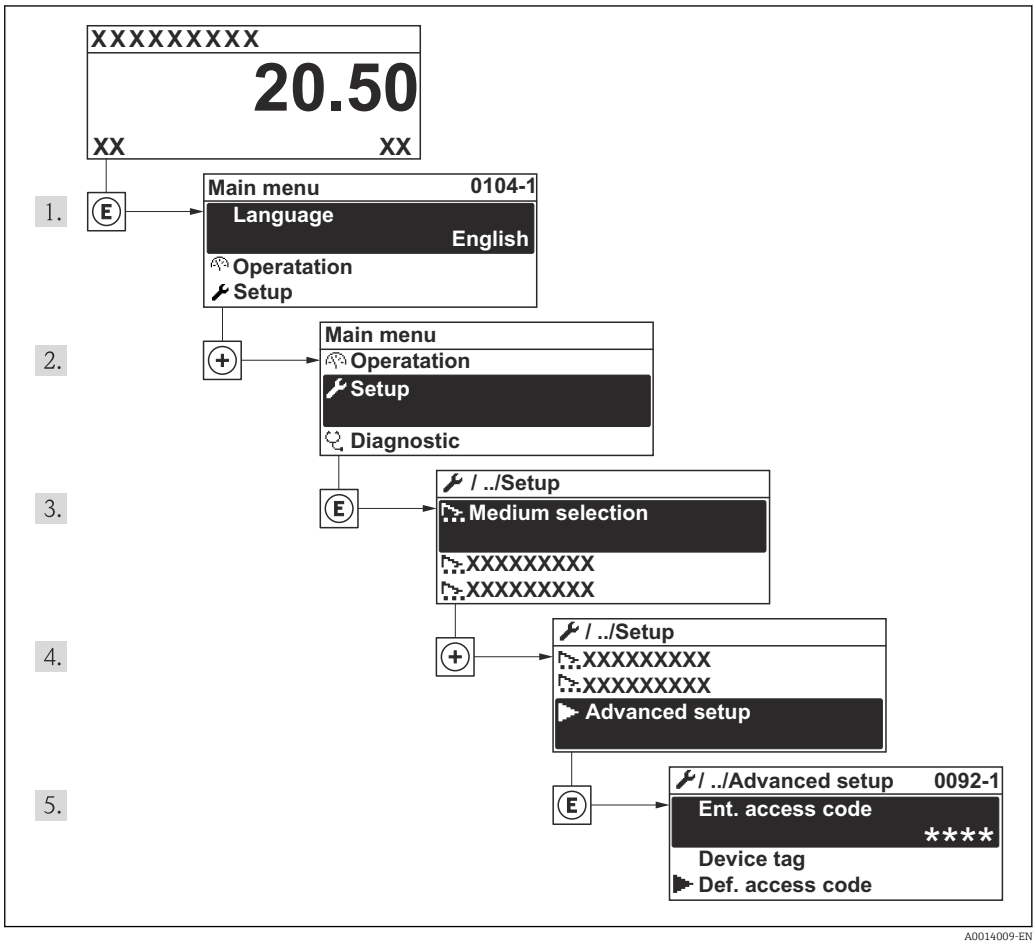

21 Using the example of the local display

Navigation
"Setup" menu → Advanced setup

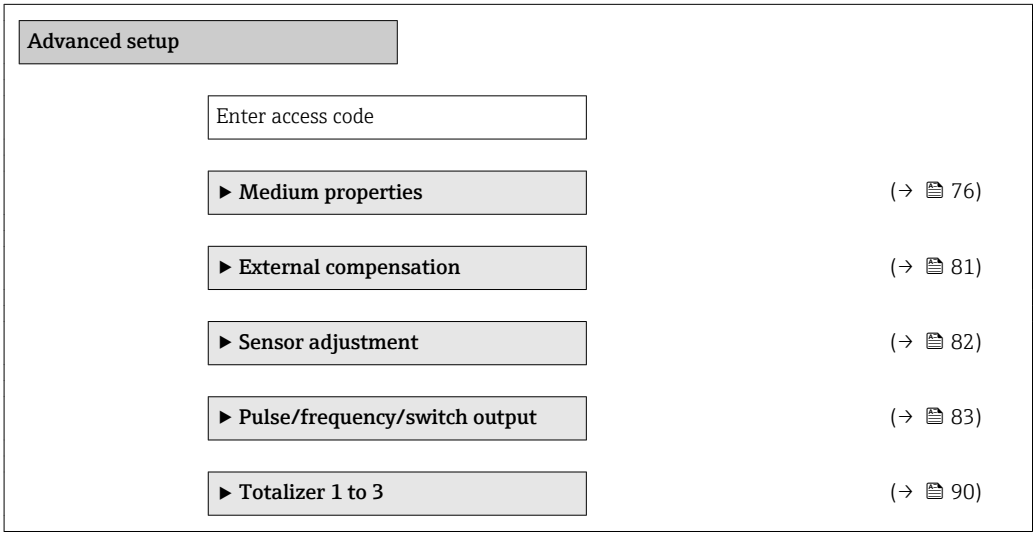

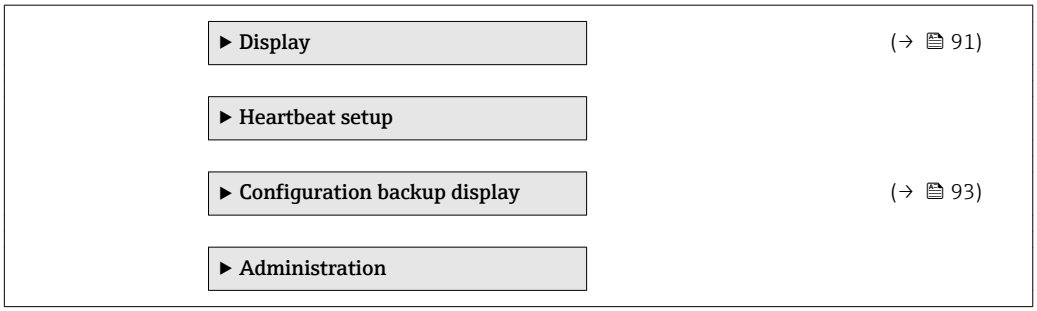

10.5.1 Setting the medium properties

In the **Medium properties** submenu the reference values for the measuring application can be set.

Navigation
"Setup" menu → Advanced setup → Medium properties

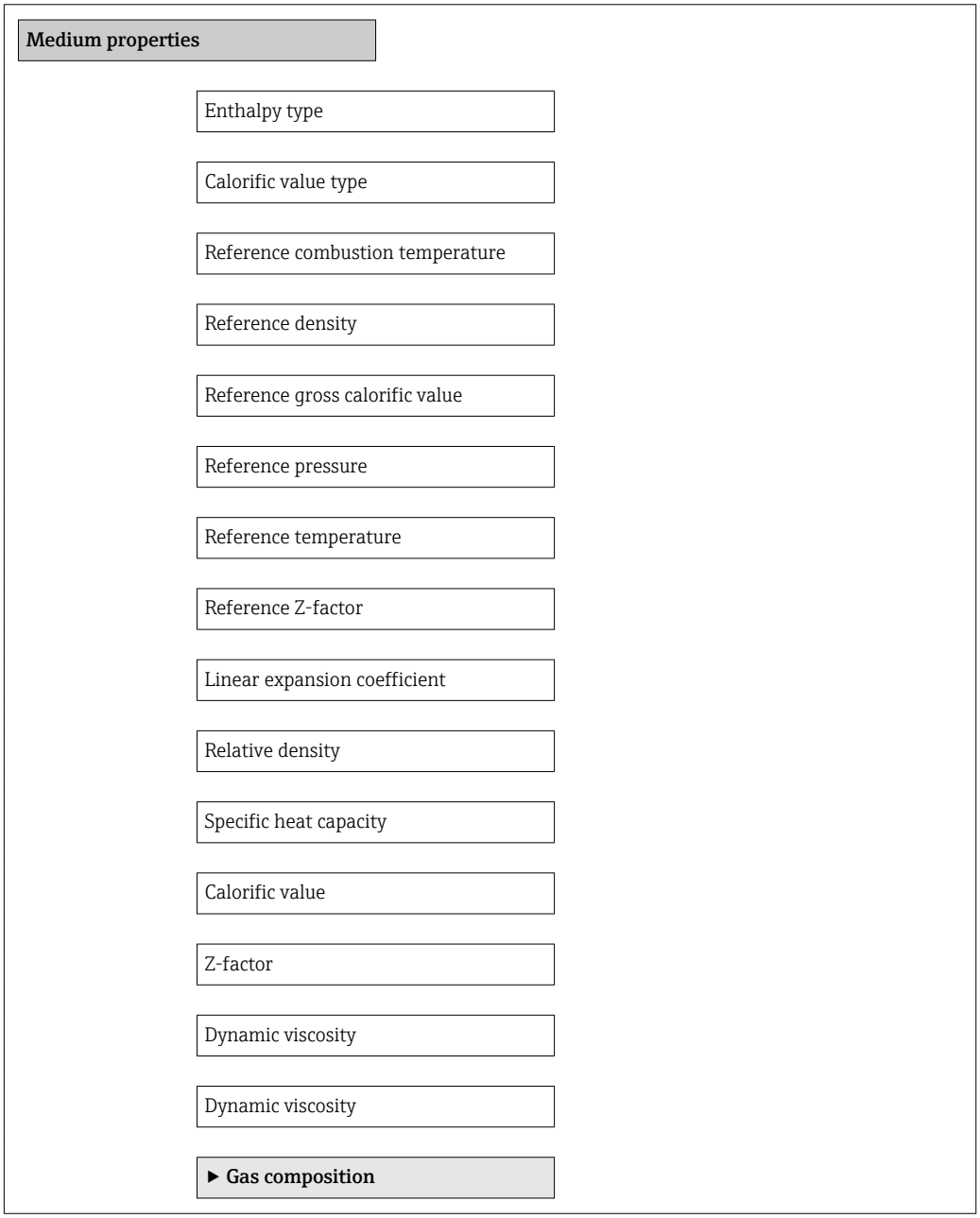

Parameter overview with brief description

Parameter	Description	Selection / User entry	Factory setting
Enthalpy type	Define which kind of enthalpy is used.	▪ Heat ▪ Calorific value	Heat
Calorific value type	Select calculation based on gross calorific value or net calorific value.	▪ Gross calorific value volume ▪ Net calorific value volume ▪ Gross calorific value mass ▪ Net calorific value mass	Gross calorific value mass
Reference combustion temperature	Enter reference combustion temperature to calculate the natural gas energy value.	−200 to 450 °C	20 °C
Reference density	Enter fixed value for reference density.	0.01 to 15 000 kg/m³	1 000 kg/m³
Reference gross calorific value	Enter reference gross calorific value of the natural gas.	Positive floating-point number	50 000 kJ/Nm³
Reference pressure	Enter reference pressure for the calulation of the reference density.	0 to 250 bar	1.01325 bar
Reference temperature	Enter reference temperature for calculating the reference density.	−200 to 450 °C	20 °C
Reference Z-factor	Enter real gas constant Z for gas under reference conditions.	0.1 to 2	1
Linear expansion coefficient	Enter linear, medium-specific expansion coefficient for calculating the reference density.	1.0^{-6} to 2.0^{-3}	2.06^{-4}
Relative density	Enter a relative density of the natural gas.	0.55 to 0.9	0.664
Specific heat capacity	Enter the specific heat capacity of the medium.	0 to 50 kJ/(kgK)	4.187 kJ/(kgK)
Calorific value	Enter gross calorific value to calculate the energy flow.	Positive floating-point number	50 000 kJ/kg
Z-factor	Enter real gas constant Z for gas under operation conditions.	0.1 to 2.0	1
Dynamic viscosity	Enter the value of dynamic viscosity for a user-specific gas.	Positive floating-point number	0.015 cP
Dynamic viscosity	Enter the value of dynamic viscosity for a user-specific liquid.	Positive floating-point number	1 cP

Configuring the gas composition

In the **Gas composition** submenu the gas composition for the measuring application can be set.

Navigation

"Setup" menu → Advanced setup → Medium properties → Gas composition

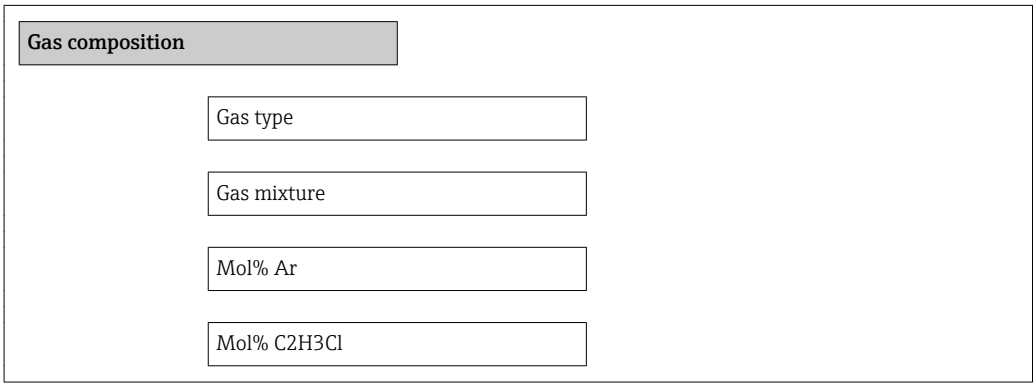

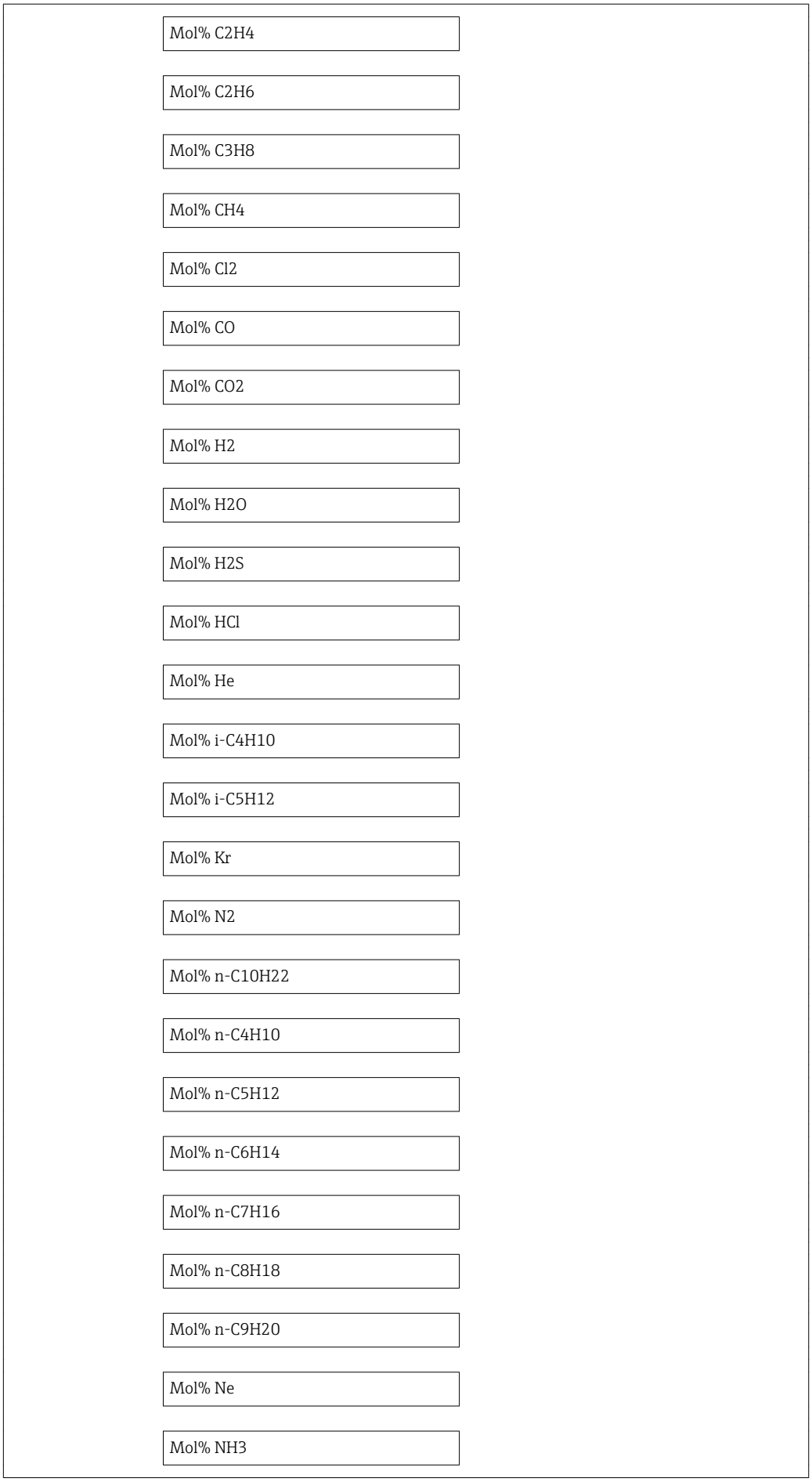
Mol% C2H4
Mol% C2H6
Mol% C3H8
Mol% CH4
Mol% Cl2
Mol% CO
Mol% CO2
Mol% H2
Mol% H2O
Mol% H2S
Mol% HCl
Mol% He
Mol% i-C4H10
Mol% i-C5H12
Mol% Kr
Mol% N2
Mol% n-C10H22
Mol% n-C4H10
Mol% n-C5H12
Mol% n-C6H14
Mol% n-C7H16
Mol% n-C8H18
Mol% n-C9H20
Mol% Ne
Mol% NH3

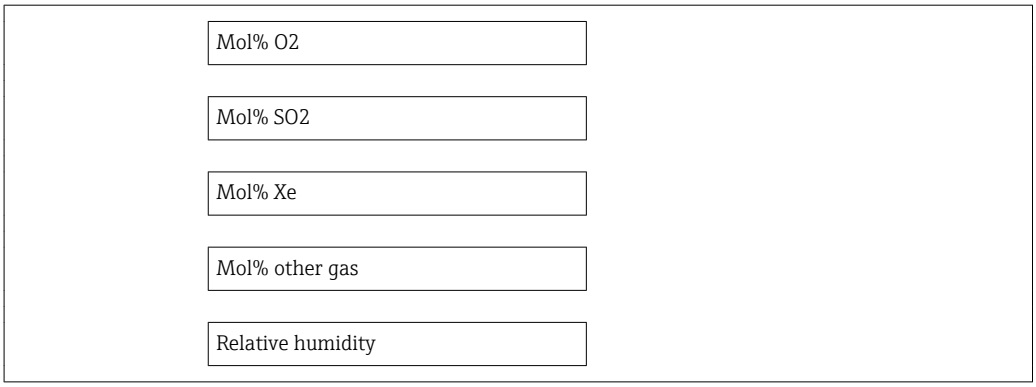

Parameter overview with brief description

Parameter	Description	Selection / User entry	Factory setting
Gas type	Select measured gas type.	▪ Hydrogen H2 ▪ Helium He ▪ Neon Ne ▪ Argon Ar ▪ Krypton Kr ▪ Xenon Xe ▪ Nitrogen N2 ▪ Oxygen O2 ▪ Chlorine Cl2 ▪ Ammonia NH3 ▪ Carbon monoxide CO ▪ Carbon dioxide CO2 ▪ Sulfur dioxide SO2 ▪ Hydrogen sulfide H2S ▪ Hydrogen chloride HCl ▪ Methane CH4 ▪ Ethane C2H6 ▪ Propane C3H8 ▪ Butane C4H10 ▪ Ethylene C2H4 ▪ Vinyl Chloride C2H3Cl	Methane CH4
Gas mixture	Select measured gas mixture.	▪ Hydrogen H2 ▪ Helium He ▪ Neon Ne ▪ Argon Ar ▪ Krypton Kr ▪ Xenon Xe ▪ Nitrogen N2 ▪ Oxygen O2 ▪ Chlorine Cl2 ▪ Ammonia NH3 ▪ Carbon monoxide CO ▪ Carbon dioxide CO2 ▪ Sulfur dioxide SO2 ▪ Hydrogen sulfide H2S ▪ Hydrogen chloride HCl ▪ Methane CH4 ▪ Ethane C2H6 ▪ Propane C3H8 ▪ Butane C4H10 ▪ Ethylene C2H4 ▪ Vinyl Chloride C2H3Cl ▪ Others	Methane CH4
Mol% Ar	Enter amount of substance for the gas mixture.	0 to 100 %	0 %
Mol% C2H3Cl	Enter amount of substance for the gas mixture.	0 to 100 %	0 %

Parameter	Description	Selection / User entry	Factory setting
Mol% C2H4	Enter amount of substance for the gas mixture.	0 to 100 %	0 %
Mol% C2H6	Enter amount of substance for the gas mixture.	0 to 100 %	0 %
Mol% C3H8	Enter amount of substance for the gas mixture.	0 to 100 %	0 %
Mol% CH4	Enter amount of substance for the gas mixture.	0 to 100 %	100 %
Mol% Cl2	Enter amount of substance for the gas mixture.	0 to 100 %	0 %
Mol% CO	Enter amount of substance for the gas mixture.	0 to 100 %	0 %
Mol% CO2	Enter amount of substance for the gas mixture.	0 to 100 %	0 %
Mol% H2	Enter amount of substance for the gas mixture.	0 to 100 %	0 %
Mol% H2O	Enter amount of substance for the gas mixture.	0 to 100 %	0 %
Mol% H2S	Enter amount of substance for the gas mixture.	0 to 100 %	0 %
Mol% HCl	Enter amount of substance for the gas mixture.	0 to 100 %	0 %
Mol% He	Enter amount of substance for the gas mixture.	0 to 100 %	0 %
Mol% i-C4H10	Enter amount of substance for the gas mixture.	0 to 100 %	0 %
Mol% i-C5H12	Enter amount of substance for the gas mixture.	0 to 100 %	0 %
Mol% Kr	Enter amount of substance for the gas mixture.	0 to 100 %	0 %
Mol% N2	Enter amount of substance for the gas mixture.	0 to 100 %	0 %
Mol% n-C10H22	Enter amount of substance for the gas mixture.	0 to 100 %	0 %
Mol% n-C4H10	Enter amount of substance for the gas mixture.	0 to 100 %	0 %
Mol% n-C5H12	Enter amount of substance for the gas mixture.	0 to 100 %	0 %
Mol% n-C6H14	Enter amount of substance for the gas mixture.	0 to 100 %	0 %
Mol% n-C6H14	Enter amount of substance for the gas mixture.	0 to 100 %	0 %
Mol% n-C7H16	Enter amount of substance for the gas mixture.	0 to 100 %	0 %
Mol% n-C8H18	Enter amount of substance for the gas mixture.	0 to 100 %	0 %
Mol% n-C9H20	Enter amount of substance for the gas mixture.	0 to 100 %	0 %
Mol% Ne	Enter amount of substance for the gas mixture.	0 to 100 %	0 %
Mol% NH3	Enter amount of substance for the gas mixture.	0 to 100 %	0 %

Parameter	Description	Selection / User entry	Factory setting
Mol% O2	Enter amount of substance for the gas mixture.	0 to 100 %	0 %
Mol% SO2	Enter amount of substance for the gas mixture.	0 to 100 %	0 %
Mol% Xe	Enter amount of substance for the gas mixture.	0 to 100 %	0 %
Mol% other gas	Enter amount of substance for the gas mixture.	0 to 100 %	0 %
Relative humidity	Enter humidity content of air in %.	0 to 100 %	0 %

10.5.2 Performing external compensation

The **External compensation** submenu contains parameters which can be used to enter external or fixed values. These values are used for internal calculations.

Navigation

"Setup" menu → Advanced setup → External compensation

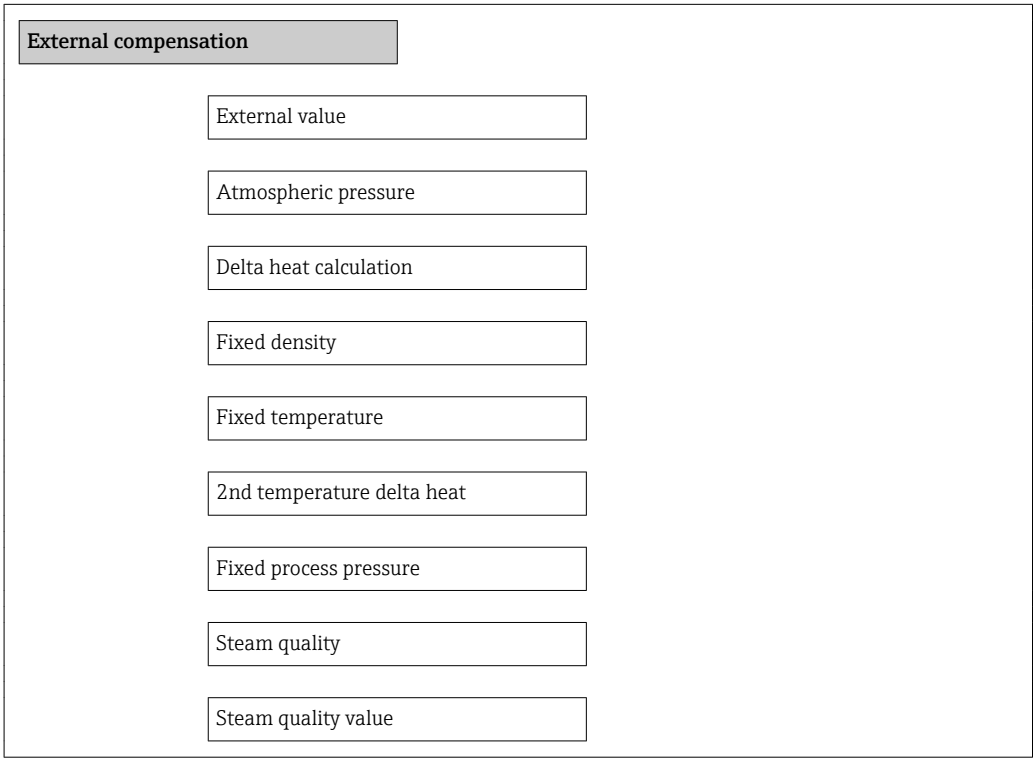

Parameter overview with brief description

Parameter	Description	Selection / User entry	Factory setting
External value	Assign variable from external device to process variable.	▪ Off ▪ Pressure ▪ Relative pressure ▪ Density ▪ Temperature ▪ 2nd temperature delta heat	Off
Atmospheric pressure	Enter atmospheric pressure value to be used for pressure correction.	0 to 250 bar	1.01325 bar

Parameter	Description	Selection / User entry	Factory setting
Delta heat calculation	Calculates the transferred heat of a heat exchanger (= delta heat).	▪ Off ▪ Device on cold side ▪ Device on warm side	Device on warm side
Fixed density	Enter fixed value for medium density.	0.01 to 15 000 kg/m³	1 000 kg/m³
Fixed temperature	Enter a fixed value for process temperature.	−200 to 450 °C	20 °C
2nd temperature delta heat	Enter 2nd temperature value to calculate the delta heat.	−200 to 450 °C	20 °C
Fixed process pressure	Enter fixed value for process pressure.	0 to 250 bar	1.01325E-05 bar
Steam quality	Select compensation mode for steam quality.	▪ Fixed value ▪ Calculated value	Fixed value
Steam quality value	Enter fixed value for steam quality.	0 to 100 %	100 %

10.5.3 Carrying out a sensor adjustment

The **Sensor adjustment** submenu contains parameters that pertain to the functionality of the sensor.

Navigation

"Setup" menu → Advanced setup → Sensor adjustment

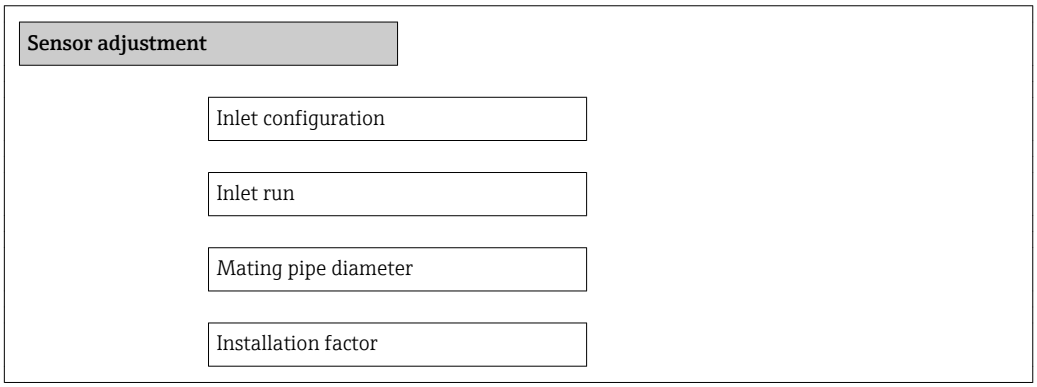

Parameter overview with brief description

Parameter	Description	Selection / User entry	Factory setting
Inlet configuration	Select inlet configuration. *Note* The available option is only valid for Prowirl F, DN15 to 150 (½" to 6").	▪ Off ▪ Single elbow ▪ Double elbow ▪ Double elbow 3D ▪ Reduction	Off
Inlet run	Define length of the straight inlet run.	0 to 20 m	0 m
Mating pipe diameter	Enter actual value of the mating pipe to activate the diameter mismatch correction. *Note* The unit displayed depends on the **Length unit** parameter.	0 to 1 m (0 to 3 ft)	Country-specific: ▪ 0 m ▪ 0 ft
Installation factor	Enter factor to adjust for installation conditions.	Positive floating-point number	1.0

10.5.4 Configuring the pulse/frequency/switch output

The **Pulse/frequency/switch output** wizard guides you systematically through all the parameters that can be set for configuring the selected output type.

Configuring the pulse output

Navigation
"Setup" menu → Advanced setup → Pulse/frequency/switch output → Operating mode

Structure of the wizard for the pulse output

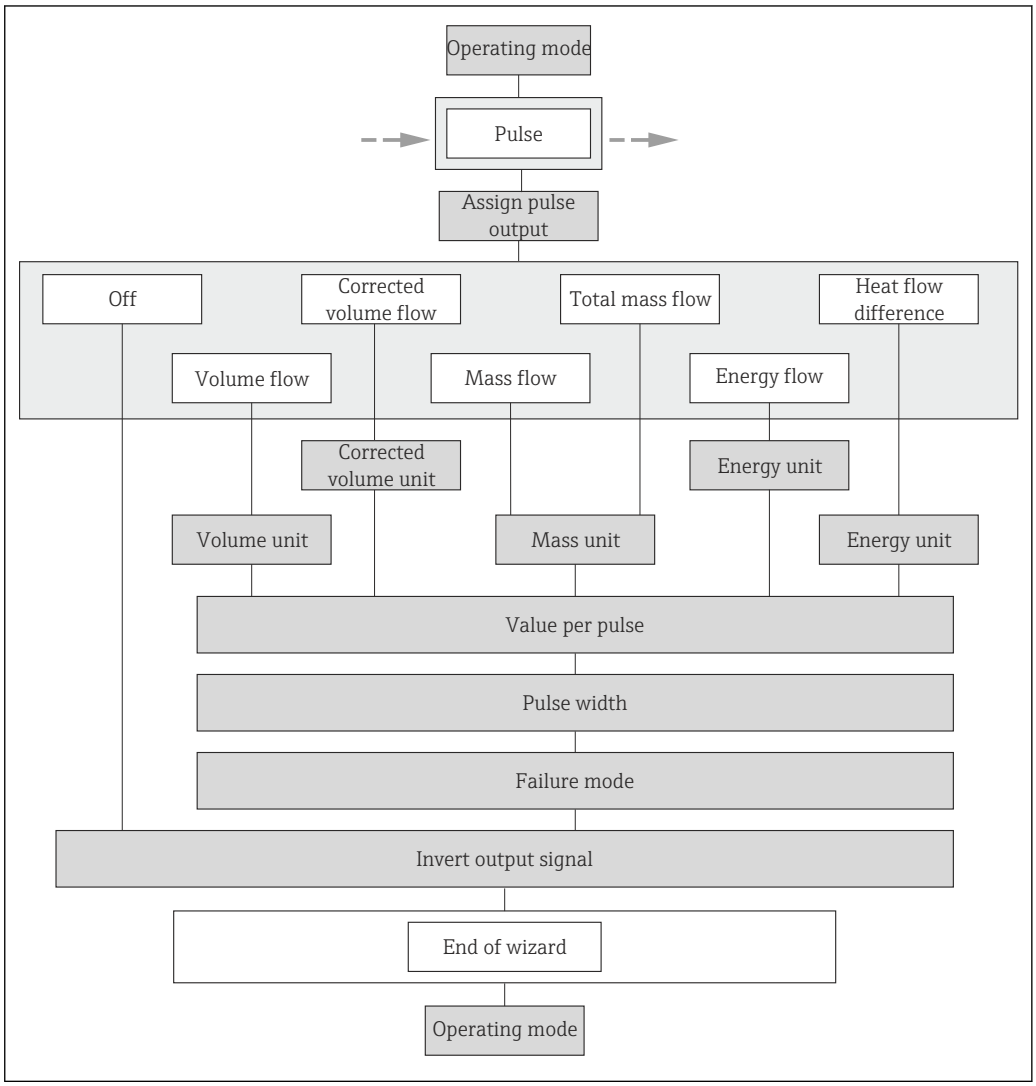

22 *"Pulse/frequency/switch output" wizard in the "Setup" menu: "Pulse" operating mode*

Parameter overview with brief description

Parameter	Description	Selection / User entry	Factory setting
Operating mode	Define the output as a pulse, frequency or switch output.	▪ Pulse ▪ Frequency ▪ Switch	Pulse
Assign pulse output	Select process variable for pulse output.	▪ Off ▪ Volume flow ▪ Corrected volume flow ▪ Mass flow ▪ Total mass flow ▪ Energy flow ▪ Heat flow difference	Volume flow

Parameter	Description	Selection / User entry	Factory setting
Mass unit	Select mass unit. *Result* The selected unit is taken from: **Mass flow unit** parameter	Unit choose list	Country-specific: ▪ kg ▪ lb
Volume unit	Select volume unit. **Result** The selected unit is taken from: **Volume flow unit** parameter	Unit choose list	Country-specific: ▪ l ▪ gal (us)
Corrected volume unit	Select corrected volume unit. **Result** The selected unit is taken from: **Corrected volume flow unit** parameter	Unit choose list	Country-specific: ▪ Nl ▪ Sft³
Energy unit	Select energy unit.	Unit choose list	Country-specific: ▪ kWh ▪ Btu
Value per pulse	Enter measured value at which a pulse is output.	2.0E-38 to 3.4E+38 m³	1 m³
Pulse width	Define time width of the output pulse.	5 to 2 000 ms	100 ms
Failure mode	Define output behavior in alarm condition.	▪ Actual value ▪ No pulses	No pulses
Invert output signal	Invert the output signal.	▪ No ▪ Yes	No

Configuring the frequency output

Navigation
"Setup" menu → Advanced setup → Pulse/frequency/switch output

Structure of the wizard for the frequency output

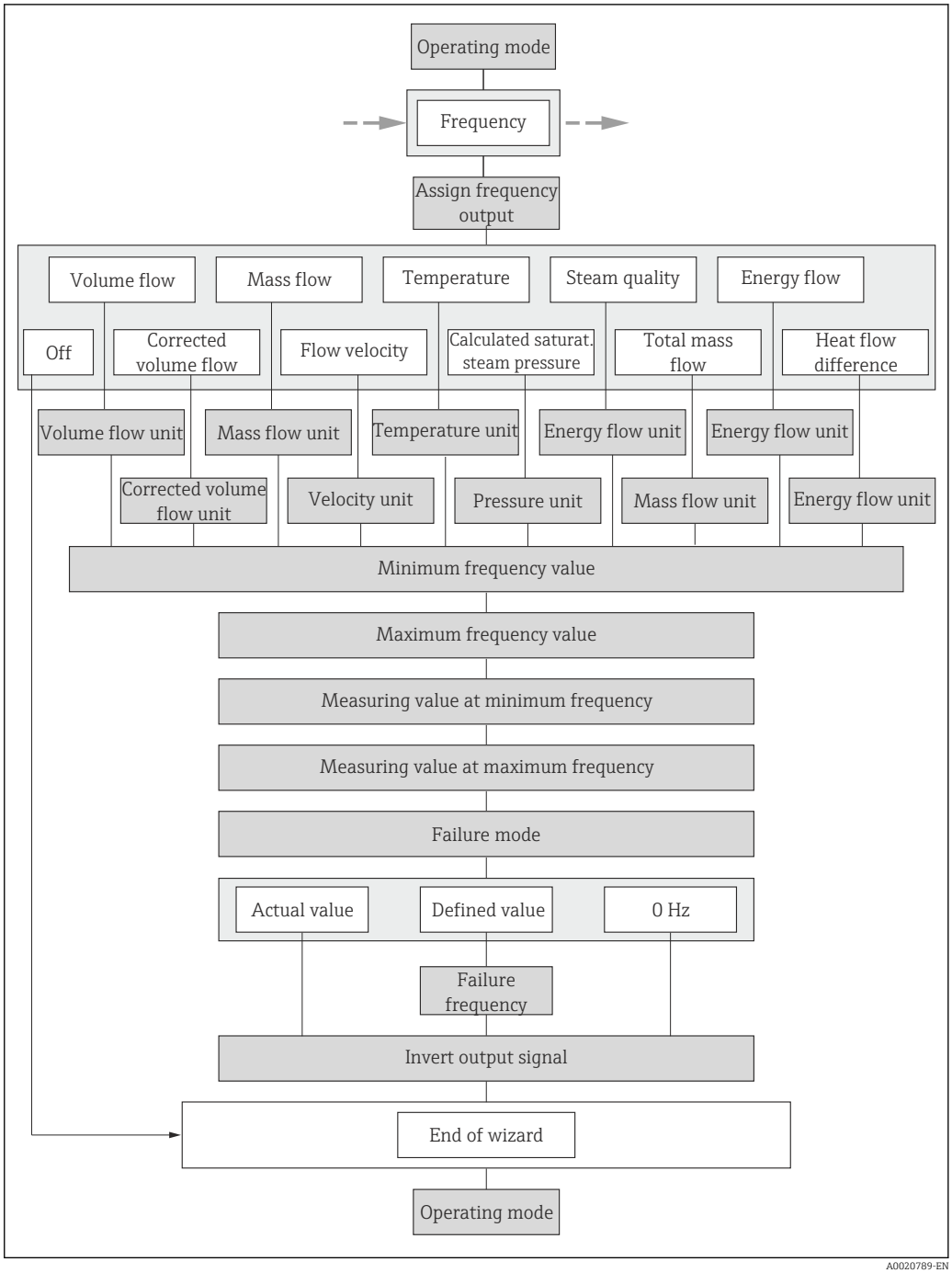

23 *"Pulse/frequency/switch output" wizard in the "Setup" menu: "Frequency" operating mode*

Parameter overview with brief description

Parameter	Description	Selection / User entry	Factory setting
Operating mode	Define the output as a pulse, frequency or switch output.	▪ Pulse ▪ Frequency ▪ Switch	Pulse
Assign frequency output	Select process variable for frequency output.	▪ Off ▪ Volume flow ▪ Corrected volume flow ▪ Mass flow ▪ Flow velocity ▪ Temperature ▪ Calculated saturated steam pressure ▪ Steam quality ▪ Total mass flow ▪ Energy flow ▪ Heat flow difference	Off
Mass flow unit	Select mass flow unit. *Result* The selected unit applies for: ▪ Output ▪ Low flow cut off ▪ Simulation process variable	Unit choose list	Country-specific: ▪ kg/h ▪ lb/min
Volume flow unit	Select volume flow unit. *Result* The selected unit applies for: ▪ Output ▪ Low flow cut off ▪ Simulation process variable	Unit choose list	Country-specific: ▪ l/h ▪ gal/min (us)
Corrected volume flow unit	Select corrected volume flow unit. *Result* The selected unit applies for: ▪ Output ▪ Low flow cut off ▪ Simulation process variable	Unit choose list	Country-specific: ▪ Nl/h ▪ Sft³/h
Energy flow unit	Select energy flow unit. *Result* The selected unit applies for: ▪ Outputs ▪ Low flow cut off	Unit choose list	Country-specific: ▪ kW ▪ Btu/h
Pressure unit	Select process pressure unit.	Unit choose list	Country-specific: ▪ bar ▪ psi
Velocity unit	Select velocity unit.	Unit choose list	Country-specific: ▪ m/s ▪ ft/s
Temperature unit	Select temperature unit. *Result* The selected unit applies for: ▪ Output ▪ Reference temperature ▪ Simulation process variable	Unit choose list	Country-specific: ▪ °C (Celsius) ▪ °F (Fahrenheit)
Minimum frequency value	Enter minimum frequency.	0.0 to 1 000.0 Hz	0.0 Hz
Maximum frequency value	Enter maximum frequency.	0.0 to 1 000.0 Hz	1 000.0 Hz
Measuring value at minimum frequency	Enter measured value for minmum frequency.	Signed floating-point number	0

Parameter	Description	Selection / User entry	Factory setting
Measuring value at maximum frequency	Enter measured value for maximum frequency.	Signed floating-point number	0
Failure mode	Define output behavior in alarm condition.	▪ Actual value ▪ Defined value ▪ 0 Hz	0 Hz
Failure frequency	Enter frequency output value in alarm condition.	0.0 to 1250.0 Hz	0.0 Hz
Invert output signal	Invert the output signal.	▪ No ▪ Yes	No

Configuring the switch output

Navigation
"Setup" menu → Advanced setup → Pulse/frequency/switch output

Structure of the wizard for the switch output

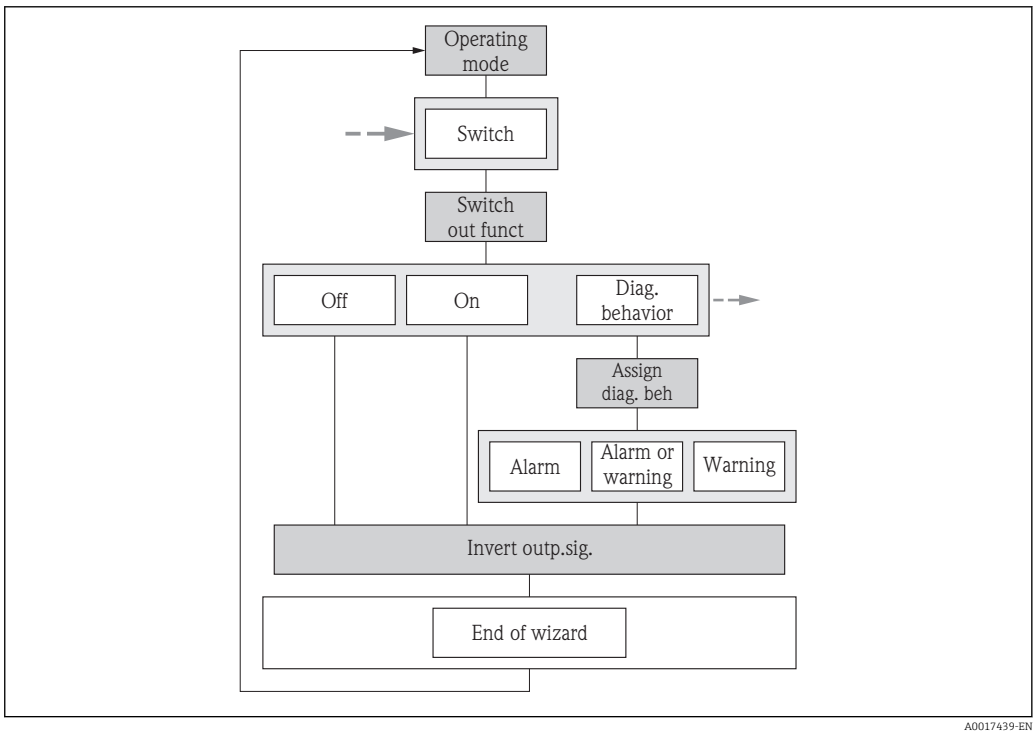

24 "Pulse/frequency/switch output" wizard in the "Setup" menu: "Switch" operating mode (Part 1)

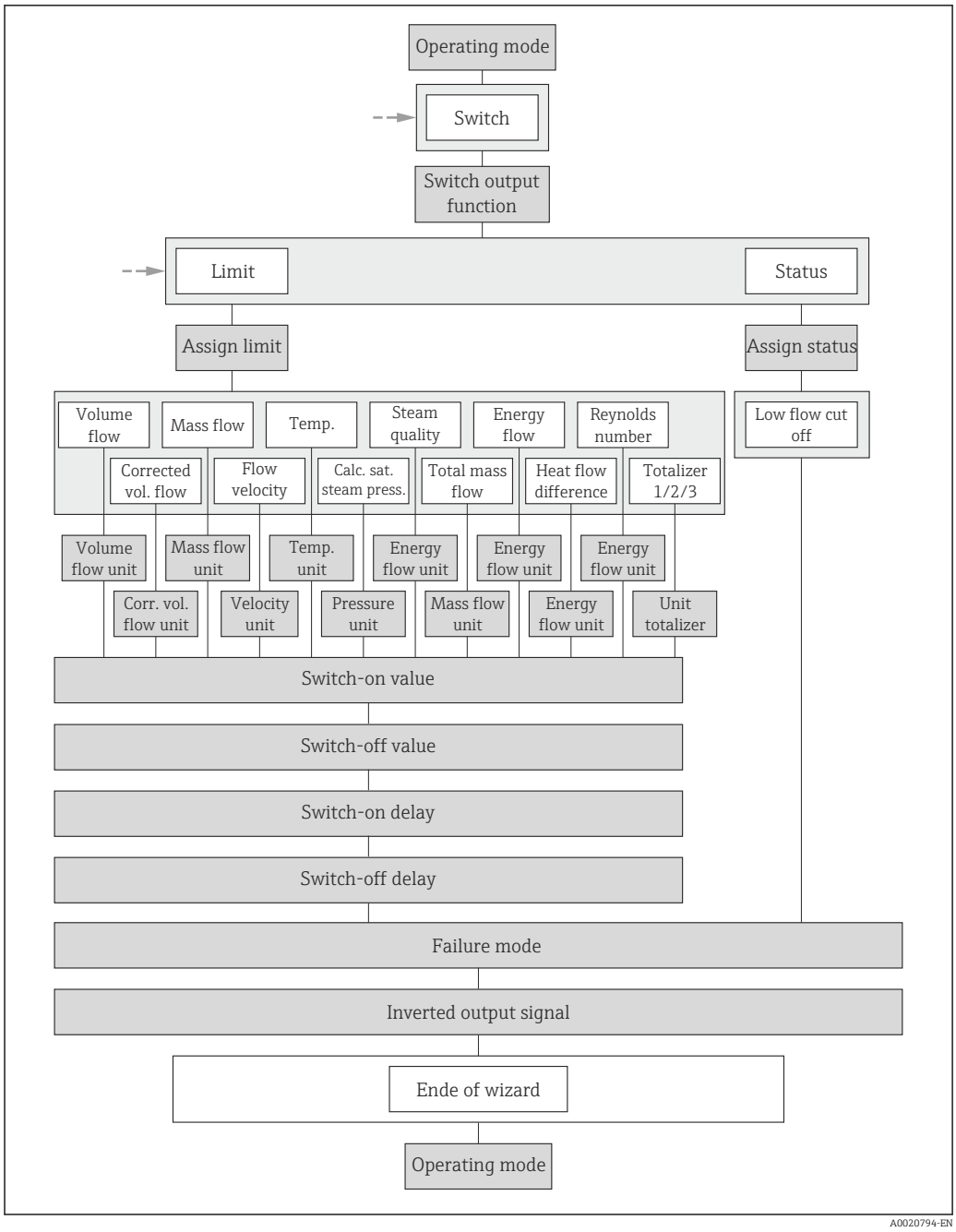

25 *"Pulse/frequency/switch output" wizard in the "Setup" menu: "Switch" operating mode (Part 2)*

Parameter overview with brief description

Parameter	Description	Selection / User entry	Factory setting
Operating mode	Define the output as a pulse, frequency or switch output.	▪ Pulse ▪ Frequency ▪ Switch	Pulse
Switch output function	Select function for switch output.	▪ Off ▪ On ▪ Diagnostic behavior ▪ Limit ▪ Status	Off
Assign diagnostic behavior	Select diagnostic behavior for switch output.	▪ Alarm ▪ Alarm or warning ▪ Warning	Alarm

Parameter	Description	Selection / User entry	Factory setting
Assign limit	Select process variable for limit function.	▪ Volume flow ▪ Corrected volume flow ▪ Mass flow ▪ Flow velocity ▪ Temperature ▪ Calculated saturated steam pressure ▪ Steam quality ▪ Total mass flow ▪ Energy flow ▪ Heat flow difference ▪ Reynolds number ▪ Totalizer 1 ▪ Totalizer 2 ▪ Totalizer 3	Volume flow
Assign flow direction check	Select process variable for flow direction monitoring.	▪ Off ▪ Volume flow ▪ Mass flow ▪ Corrected volume flow	Volume flow
Assign status	Select device status for switch output.	▪ Low flow cut off ▪ Digital output 6	Low flow cut off
Mass flow unit	Select mass flow unit. *Result* The selected unit applies for: ▪ Output ▪ Low flow cut off ▪ Simulation process variable	Unit choose list	Country-specific: ▪ kg/h ▪ lb/min
Volume flow unit	Select volume flow unit. *Result* The selected unit applies for: ▪ Output ▪ Low flow cut off ▪ Simulation process variable	Unit choose list	Country-specific: ▪ l/h ▪ gal/min (us)
Corrected volume flow unit	Select corrected volume flow unit. *Result* The selected unit applies for: ▪ Output ▪ Low flow cut off ▪ Simulation process variable	Unit choose list	Country-specific: ▪ Nl/h ▪ Sft³/h
Velocity unit	Select velocity unit.	Unit choose list	Country-specific: ▪ m/s ▪ ft/s
Temperature unit	Select temperature unit. *Result* The selected unit applies for: ▪ Output ▪ Reference temperature ▪ Simulation process variable	Unit choose list	Country-specific: ▪ °C (Celsius) ▪ °F (Fahrenheit)
Pressure unit	Select process pressure unit.	Unit choose list	Country-specific: ▪ bar ▪ psi
Energy flow unit	Select energy flow unit. *Result* The selected unit applies for: ▪ Outputs ▪ Low flow cut off	Unit choose list	Country-specific: ▪ kW ▪ Btu/h
Unit totalizer	Select process variable totalizer unit.	Unit choose list	m³

Parameter	Description	Selection / User entry	Factory setting
Switch-on value	Enter measured value for the switch-on point.	Signed floating-point number	0 m^3/h
Switch-off value	Enter measured value for the switch-off point.	Signed floating-point number	0 m^3/h
Switch-on delay	Define delay for the switch-on of status output.	0.0 to 100.0 s	0.0 s
Switch-off delay	Define delay for the switch-off of status output.	0.0 to 100.0 s	0.0 s
Failure mode	Define output behavior in alarm condition.	▪ Actual status ▪ Open ▪ Closed	Open
Invert output signal	Invert the output signal.	▪ No ▪ Yes	No

10.5.5 Configuring the totalizer

In the **"Totalizer 1 to 3" submenu** the individual totalizers can be configured.

Navigation
"Setup" menu → Advanced setup → Totalizer 1 to 3

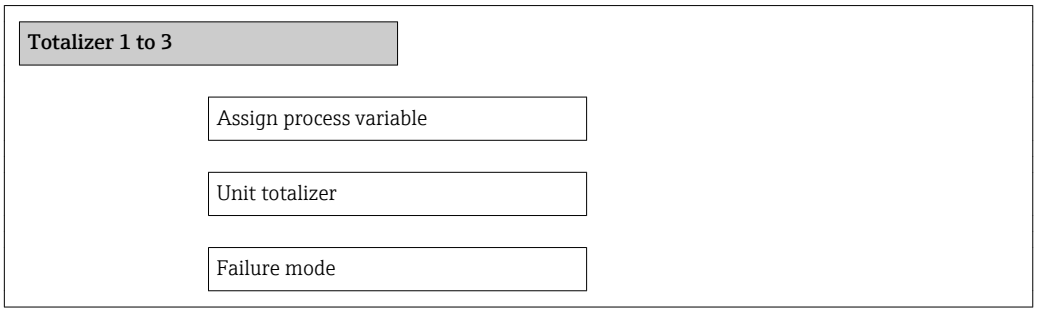

Parameter overview with brief description

Parameter	Description	Selection	Factory setting
Assign process variable	Select process variable for totalizer.	▪ Off ▪ Volume flow ▪ Corrected volume flow ▪ Mass flow ▪ Total mass flow ▪ Condensate mass flow ▪ Energy flow ▪ Heat flow difference	Volume flow
Unit totalizer	Select process variable totalizer unit.	Unit choose list	m^3
Failure mode	Define totalizer behavior in alarm condition.	▪ Stop ▪ Actual value ▪ Last valid value	Stop

10.5.6 Carrying out additional display configurations

In the **"Display" submenu** you can set all the parameters involved in the configuration of the local display.

Navigation
"Setup" menu → Advanced setup → Display

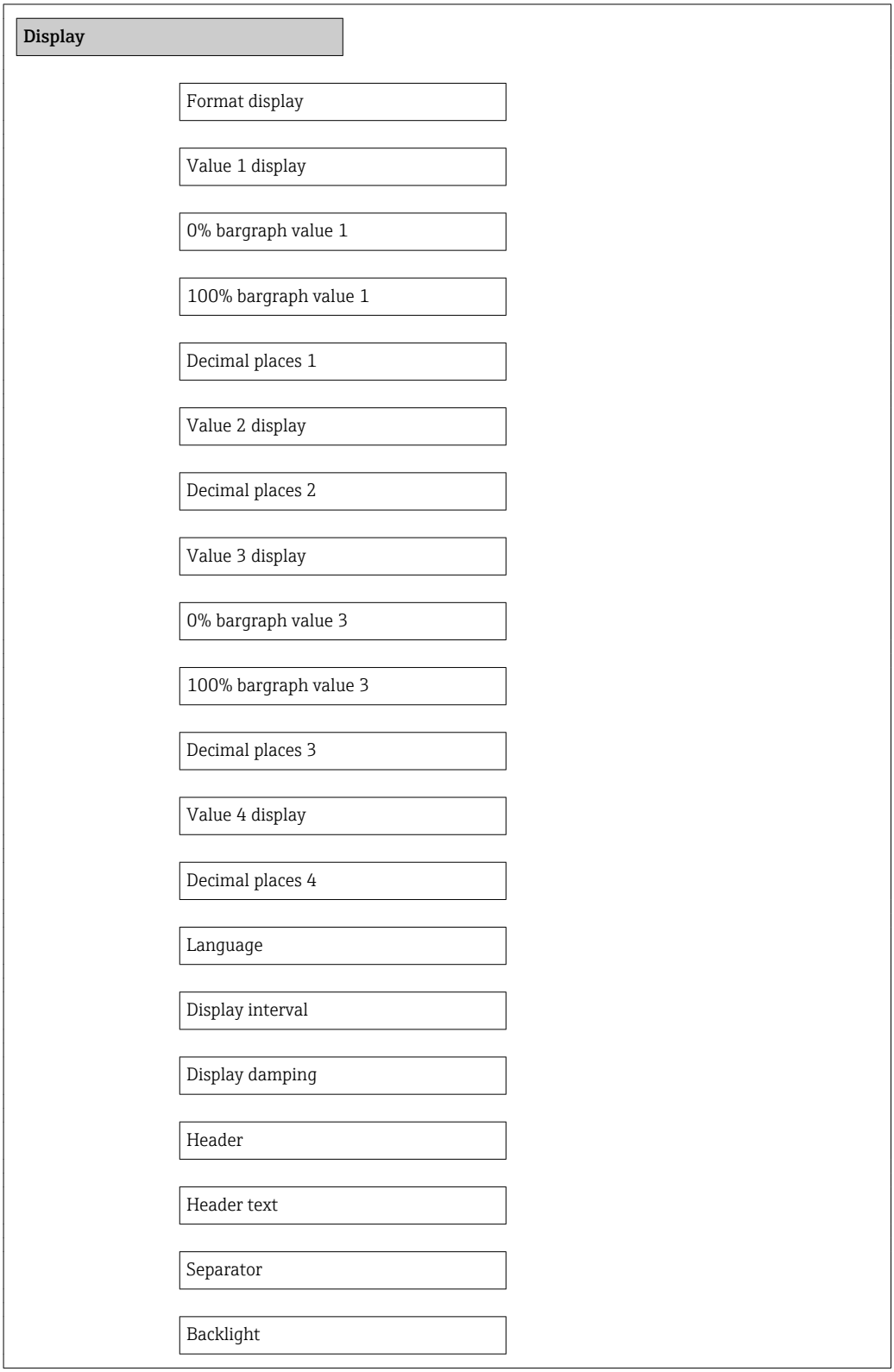

Parameter overview with brief description

Parameter	Description	Selection / User entry	Factory setting
Format display	Select how measured values are shown on the display.	▪ 1 value, max. size ▪ 1 bargraph + 1 value ▪ 2 values ▪ 1 value large + 2 values ▪ 4 values	1 value, max. size
Value 1 display	Select the measured value that is shown on the local display.	▪ Volume flow ▪ Corrected volume flow ▪ Mass flow ▪ Flow velocity ▪ Temperature ▪ Calculated saturated steam pressure ▪ Steam quality ▪ Total mass flow ▪ Condensate mass flow ▪ Energy flow ▪ Heat flow difference ▪ Reynolds number ▪ Density ▪ Totalizer 1 ▪ Totalizer 2 ▪ Totalizer 3	Volume flow
0% bargraph value 1	Enter 0% value for bar graph display.	Signed floating-point number	0 m^3/h
100% bargraph value 1	Enter 100% value for bar graph display.	Signed floating-point number	1 m^3/h
Decimal places 1	Select the number of decimal places for the display value.	▪ x ▪ x.x ▪ x.xx ▪ x.xxx ▪ x.xxxx	x.xx
Value 2 display	Select the measured value that is shown on the local display.	Picklist (see 1st display value)	None
Decimal places 2	Select the number of decimal places for the display value.	▪ x ▪ x.x ▪ x.xx ▪ x.xxx ▪ x.xxxx	x.xx
Value 3 display	Select the measured value that is shown on the local display.	Picklist (see 1st display value)	None
0% bargraph value 3	Enter 0% value for bar graph display.	Signed floating-point number	0
100% bargraph value 3	Enter 100% value for bar graph display.	Signed floating-point number	0
Decimal places 3	Select the number of decimal places for the display value.	▪ x ▪ x.x ▪ x.xx ▪ x.xxx ▪ x.xxxx	x.xx
Value 4 display	Select the measured value that is shown on the local display.	Picklist (see 1st display value)	None
Decimal places 4	Select the number of decimal places for the display value.	▪ x ▪ x.x ▪ x.xx ▪ x.xxx ▪ x.xxxx	x.xx

Parameter	Description	Selection / User entry	Factory setting
Language	Set display language.	▪ English ▪ Deutsch ▪ Français ▪ Español ▪ Italiano ▪ Nederlands ▪ Portuguesa ▪ Polski ▪ русский язык (Russian) ▪ Svenska ▪ Türkçe ▪ 中文 (Chinese) ▪ 日本語 (Japanese) ▪ 한국어 (Korean) ▪ العَرَبيّة (Arabic) ▪ Bahasa Indonesia ▪ ภาษาไทย (Thai) ▪ tiếng Việt (Vietnamese) ▪ čeština (Czech)	English (alternatively, the ordered language is preset in the device)
Display interval	Set time measured values are shown on display if display alternates between values.	1 to 10 s	5 s
Display damping	Set display reaction time to fluctuations in the measured value.	0.0 to 999.9 s	5.0 s
Header	Select header contents on local display.	▪ Device tag ▪ Free text	Device tag
Header text	Enter display header text.		----------
Separator	Select decimal separator for displaying numerical values.	▪ . ▪ ,	.
Backlight	Switch the local display backlight on and off.	▪ Disable ▪ Enable	Disable

10.6 Configuration management

After commissioning, you can save the current device configuration, copy it to another measuring point or restore the previous device configuration.

You can do so using the **"Configuration management" parameter** and the related options found in the **"Configuration backup display" submenu**.

Navigation
"Setup" menu → Advanced setup → Configuration backup display

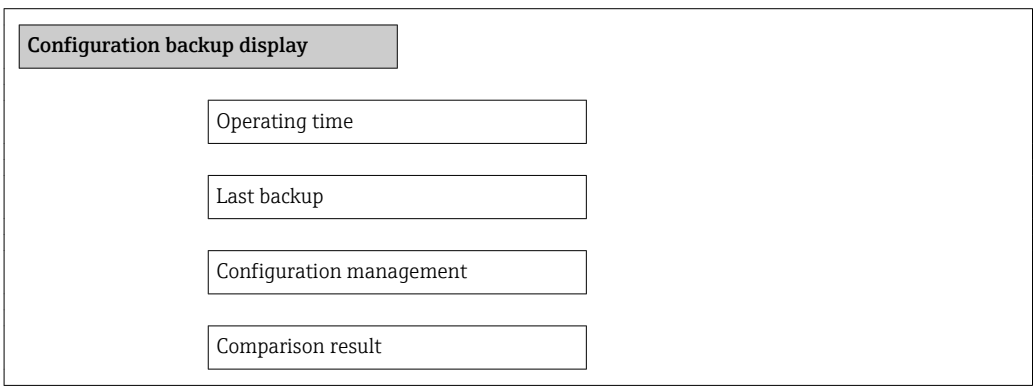

Parameter overview with brief description

Parameter	Description	User interface / Selection	Factory setting
Operating time	Indicates how long the device has been in operation.	Days (d), hours (h), minutes (m), seconds (s)	–
Last backup	Indicates when the last data backup was saved to the display module.	Days (d), hours (h), minutes (m), seconds (s)	–
Configuration management	Select action for managing the device data in the display module.	▪ Cancel ▪ Execute backup ▪ Restore ▪ Duplicate ▪ Compare ▪ Clear backup data	Cancel
Comparison result	Comparison between present device data and display backup.	▪ Settings identical ▪ Settings not identical ▪ No backup available ▪ Backup settings corrupt ▪ Check not done ▪ Dataset incompatible	Check not done

10.6.1 Function scope of the ""Configuration management" parameter" parameter

Options	Description
Execute backup	The current device configuration is backed up from the integrated HistoROM to the device's display module. The backup copy includes the transmitter data of the device.
Restore	The last backup copy of the device configuration is restored from the display module to the device's integrated HistoROM. The backup copy includes the transmitter data of the device.
Duplicate	The transmitter configuration from another device is duplicated to the device using the display module.
Compare	The device configuration saved in the display module is compared with the current device configuration of the integrated HistoROM.
Clear backup data	The backup copy of the device configuration is deleted from the display module of the device.

Integrated HistoROM
A HistoROM is a "non-volatile" device memory in the form of an EEPROM.

While this action is in progress, the configuration cannot be edited via the local display and a message on the processing status appears on the display.

10.7 Simulation

The **"Simulation" submenu** enables you to simulate, without a real flow situation, various process variables in the process and the device alarm mode and to verify downstream signal chains (switching valves or closed-control loops).

Navigation
"Diagnostics" menu → Simulation

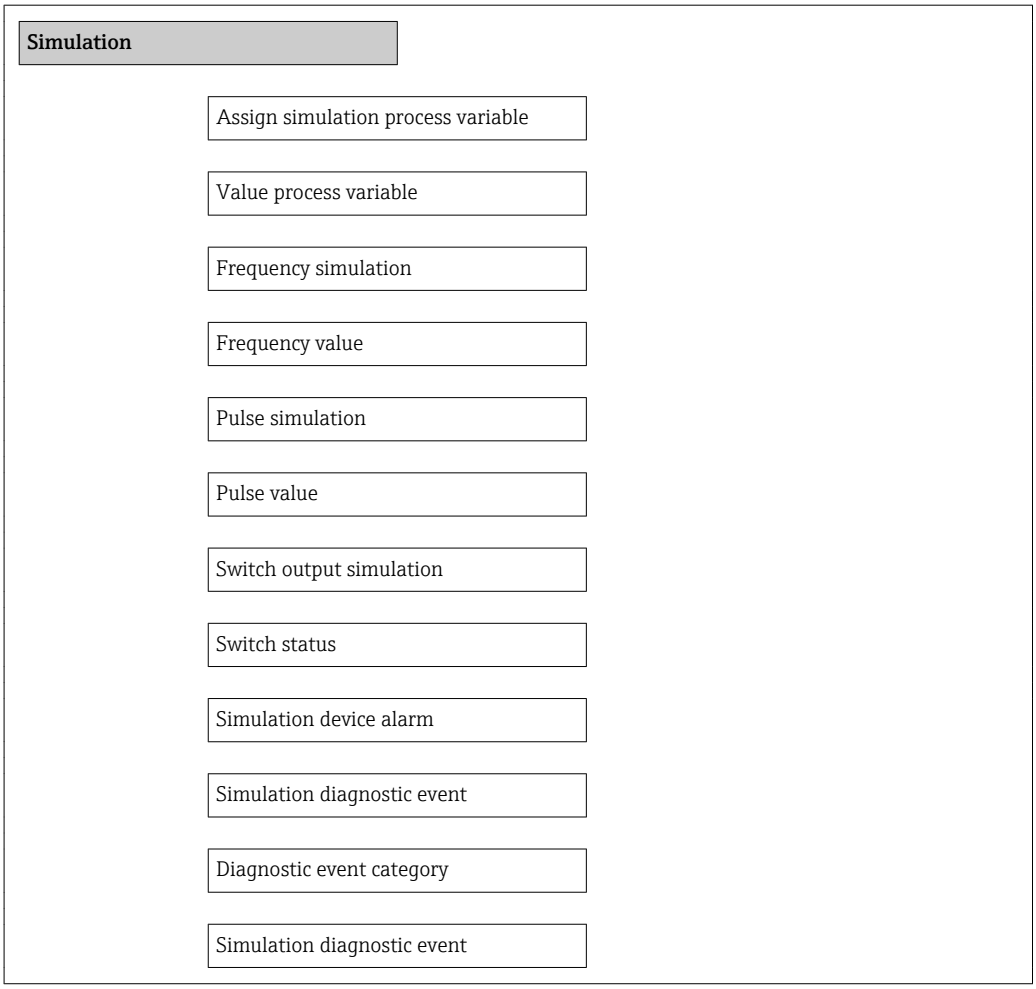

Parameter overview with brief description

Parameter	Prerequsite	Description	Selection / User entry	Factory setting
Assign simulation process variable	–	Select a process variable for the simulation process that is activated.	▪ Off ▪ Volume flow ▪ Corrected volume flow ▪ Mass flow ▪ Flow velocity ▪ Temperature ▪ Calculated saturated steam pressure ▪ Steam quality ▪ Total mass flow ▪ Condensate mass flow ▪ Energy flow ▪ Heat flow difference ▪ Reynolds number	Off
Value process variable	A process variable is selected in the **Assign simulation process variable** parameter.	Enter the simulation value for the selected process variable.	Signed floating-point number	0
Frequency simulation	–	Switch simulation of the frequency output on and off.	▪ Off ▪ On	Off

Parameter	Prerequsite	Description	Selection / User entry	Factory setting
Frequency value	The **On** option is selected in the **Frequency output simulation** parameter.	Enter the frequency value for simulation.	0.0 to 1 250.0 Hz	0.0 Hz
Pulse simulation	The **Down-count. val.** option is selected in the **Simulation pulse output** parameter.	Switch simulation of the pulse output on and off. If the **Fixed value** option is selected, the **Pulse width** parameter defines the pulse width of the pulses output.	▪ Off ▪ Fixed value ▪ Down-counting value	Off
Pulse value	The **Down-count. val.** option is selected in the **Simulation pulse output** parameter.	Enter the number of pulses for simulation.	0 to 65 535	0
Switch output simulation	–	Switch simulation of switch output on and off.	▪ Off ▪ On	Off
Switch status	The **On** option is selected in the **Switch output simulation** parameter.	Select the status of the status output for the simulation.	▪ Open ▪ Closed	Open
Simulation device alarm	–	Switch the device alarm on and off.	▪ Off ▪ On	Off
Simulation diagnostic event	–	Switch simulation of the diagnostic event on and off. For the simulation, you can choose from the diagnostic events of the category selected in the **Diagnostic event category** parameter.	▪ Off ▪ Picklist Diagnostic events (depends on the selected category)	Off
Diagnostic event category	–	Select the category of the diagnostic event.	▪ Sensor ▪ Electronics ▪ Configuration ▪ Process	Process
Simulation diagnostic event	–	Switch simulation of the diagnostic event on and off. For the simulation, you can choose from the diagnostic events of the category selected in the **Diagnostic event category** parameter.	▪ Off ▪ Picklist Diagnostic events (depends on the selected category)	Off

10.8 Protecting settings from unauthorized access

The following options exist for protecting the configuration of the measuring device from unintentional modification after commissioning:
- Write protection via access code (→ 96)
- Write protection via write protection switch (→ 97)
- Write protection via keypad lock (→ 54)
- Write protection via block operation (→ 99)

10.8.1 Write protection via access code

With the customer-specific access code, the parameters for the measuring device configuration are write-protected and their values can no longer be changed via local operation.

Navigation
"Setup" menu → Advanced setup → Administration → Define access code

Structure of the submenu

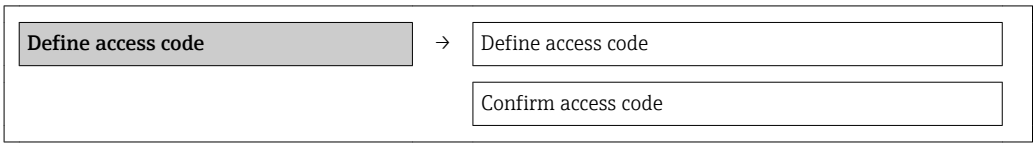

Defining the access code via local display

1. Navigate to the **Enter access code** parameter.
2. Define a max. 4-digit numeric code as an access code.
3. Enter the access code again to confirm the code.
   ↳ The 🔒-symbol appears in front of all write-protected parameters.

The device automatically locks the write-protected parameters again if a key is not pressed for 10 minutes in the navigation and editing view. The device locks the write-protected parameters automatically after 60 s if the user skips back to the operational display mode from the navigation and editing view.

- If write access is activated via access code, it can be also be deactivated only via the access code (→ 📄 54).
- The user role with which the user is currently logged on via the local display is indicated by the **Access status display** parameter. Navigation path: "Operation" menu → Access status display.

Parameters which can always be modified via the local display

Certain parameters that do not affect the measurement are excepted from write protection via the local display. Despite the defined access code, these parameters can always be modified even if the other parameters are locked.

10.8.2 Write protection via write protection switch

Unlike write protection via user-specific access code, this allows write access to the entire operating menu - other than the **"Contrast display" parameter** - to be locked.

The parameter values are now read only and cannot be edited any more (exception **"Contrast display" parameter**):
Via local display

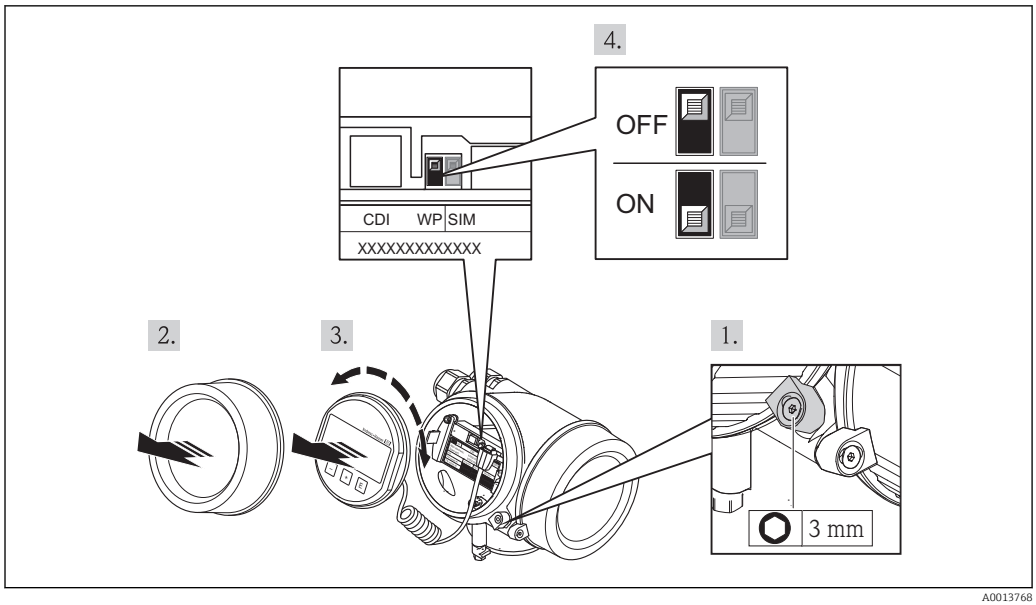

A0013768

1. Loosen the securing clamp.
2. Unscrew the electronics compartment cover.
3. Pull out the display module with a gentle rotational movement. To make it easier to access the lock switch, attach the display module to the edge of the electronics compartment.
   ↳ Display module is attached to the edge of the electronics compartment.

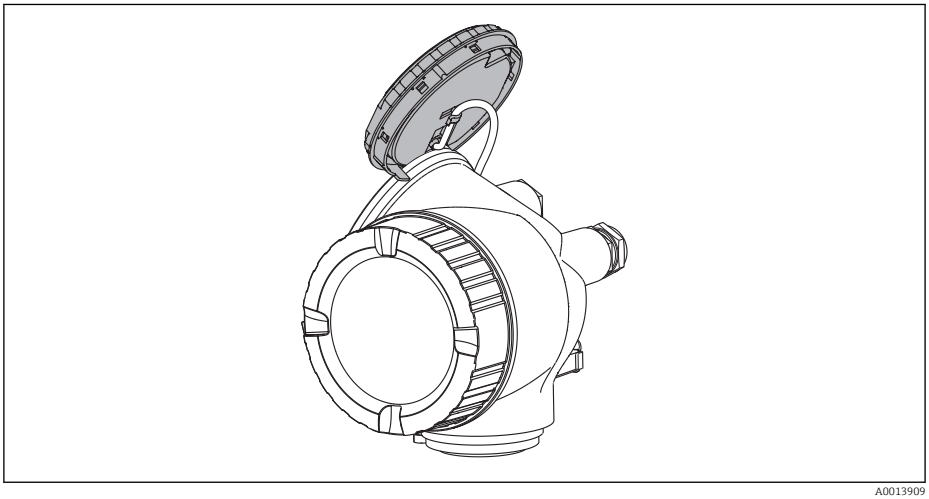

A0013909

4. Setting the write protection switch (WP) on the main electronics module to the ON position enables the hardware write protection. Setting the write protection switch (WP) on the main electronics module to the OFF position (factory setting) disables the hardware write protection.
   ↳ If hardware write protection is enabled, the **Hardware locked** option is displayed in the **Locking status** parameter (→ 🖹 103). In addition, on the local display the 🔒-symbol appears in front of the parameters in the header of the operational display and in the navigation view.

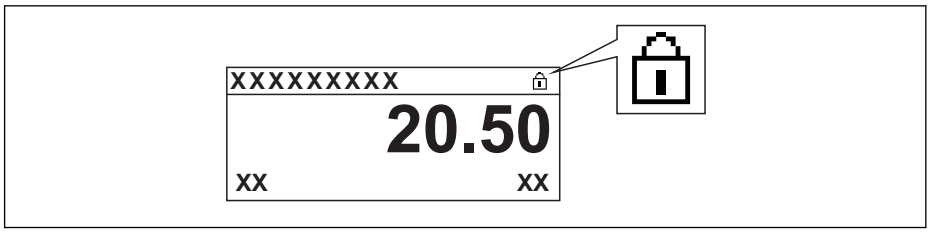

If hardware write protection is disabled, no option is displayed in the **Locking status** parameter (→ 103). On the local display, the -symbol disappears from in front of the parameters in the header of the operational display and in the navigation view.

5. Feed the cable into the gap between the housing and main electronics module and plug the display module into the electronics compartment in the desired direction until it engages.
6. Reverse the removal procedure to reassemble the transmitter.

10.8.3 Write protection via block operation

Locking via block operation:
- Block: **DISPLAY (TRDDISP)**; parameter: **Define access code**
- Block: **EXPERT_CONFIG (TRDEXP)**; parameter: **Enter access code**

10.9 Configuring the measuring device via FOUNDATION Fieldbus

10.9.1 Block configuration

Preparation

The correct Cff and device description files are needed for preparatory purposes.

1. Switch on the device.
2. Make a note of the **DEVICE_ID**.
3. Open the configuration program.
4. Load Cff and device description files into the host system or the configuration program.
5. Identify the device using the **DEVICE_ID**.
6. Assign the desired tag name to the device via the **Pd-tag/FF_PD_TAG** parameter.

Configuring the Resource Block

1. Open the Resource Block.
2. Disable the lock for device operation.
3. Change the block name (optional). Factory setting: RS-xxxxxxxxxxx (RB2)
4. Assign a description to the block via the **Description of the identification tag/ TAG_DESC** parameter.
5. Change other parameters as required.

Configuring the Transducer Blocks

The measurement and the display module are configured via the Transducer Blocks.

The basic procedure is the same for all Transducer Blocks.

1. Open the specific Transducer Block.
2. Change the block name (optional).
3. Set the block mode to **OOS** via the **Block mode/MODE_BLK** parameter, **TARGET** element.
4. Configure the device in accordance with the measuring task
5. Set the block mode to **Auto** via the **Block mode/MODE_BLK** parameter, **TARGET** element.

The block mode must be set to **Auto** to ensure the smooth operation of the device.

Configuring the Analog Input Blocks

1. Open the Analog Input Block.
2. Change the block name (optional).
3. Set the block mode to **OOS** via the **Block mode/MODE_BLK** parameter, **TARGET** element.
4. Via the **Channel/CHANNEL** parameter, select the process variable which should be used as the input value for the Analog Input Block.

5. Via the **Transducer scale/XD_SCALE** parameter, select the desired unit and the block input range for the process variable. The selected unit must suit the selected process variable. If the process variable does not suit the unit, the **Block error/ BLOCK_ERR** parameter reports *Block Configuration Error* and the block mode cannot be set to **Auto**.
6. Via the **Linearization type/L_TYPE** parameter, select the type of linearization for the input variable (factory setting: **Direct**). In the **Direct** linearization mode, the settings for the **Transducer scale/XD_SCALE** and **Output scale/OUT_SCALE** parameters must be identical. If the values do not suit the units, the **Block error/ BLOCK_ERR** parameter reports *Block Configuration Error* and the block mode cannot be set to **Auto**.
7. Enter the alarms and critical alarm messages via the **High alarm limit/ HI_HI_LIM**, **High early warning limit/HI_LIM**, **Low alarm limit/ LO_LO_LIM** and **Low early warning limit/LO_LIM** parameters. The limit values entered must be within the value range specified for the **Output scale/OUT_SCALE** parameter.
8. Specify the alarm priorities via the **Priority for high limit value alarm/HI_HI_PRI**, **Priority for high early warning/HI_PRI**, **Priority for low limit value alarm/ LO_LO_PRI** and **Priority for low limit value early warning/LO_PRI** parameters. Reporting to the field host system only takes place with alarms with a priority greater than 2.
9. Set the block mode to **Auto** via the **Block mode/MODE_BLK** parameter, **TARGET** element. For this purpose, the Resource Block must also be set to the **Auto** block mode.

Additional configuration

1. Link the function blocks and output blocks.
2. After specifying the active LAS, download all the data and parameters to the field device.

10.9.2 Scaling the measured value in the Analog Input Block

The measured value can be scaled if the **L_TYPE = Indirect** linearization type has been selected in the Analog Input Block. **XD_SCALE** defines the input range with the **EU_0** and **EU_100** elements. This is mapped linearly to the output range, defined by **OUT_SCALE** also with the elements **EU_0** and **EU_100**.

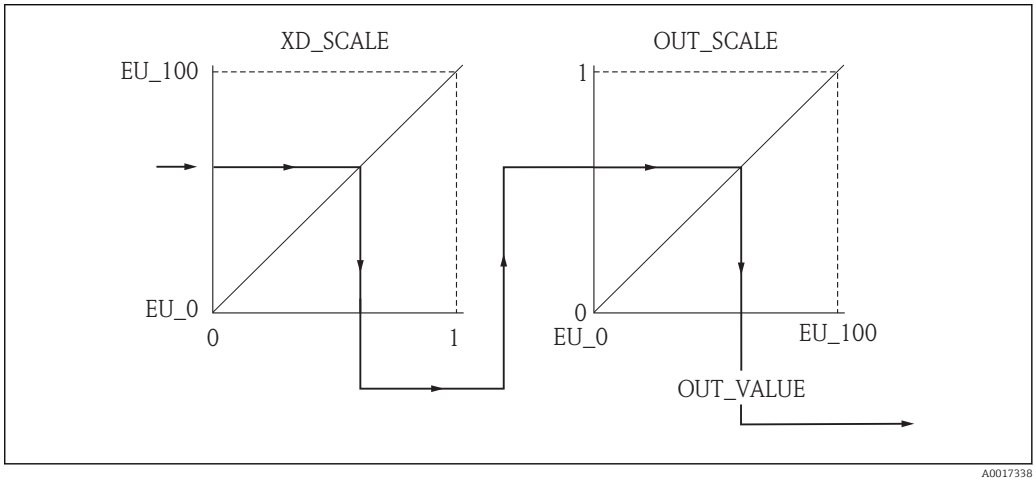

26 Scaling the measured value in the Analog Input Block

- If you have selected the **Direct** mode in the **L_TYPE** parameter, you cannot change the values and units for **XD_SCALE** and **OUT_SCALE**.
- The **L_TYPE, XD_SCALE** and **OUT_SCALE** parameters can only be changed in the **OOS** block mode.

11 Operation

11.1 Reading device locking status

The write protection types that are currently active can be determined using the **Locking status** parameter.

Navigation
"Operation" menu → Locking status

Function scope of "Locking status" parameter

Options	Description
None	The access status displayed in **"Access status display" parameter** applies (→ 54). Only appears on local display.
Hardware locked	The DIP switch for hardware locking is activated on the main electronics module. This prevents write access to the parameters (→ 97).
Temporarily locked	Due to internal processing in the device (e.g. up-/downloading of data, reset), write access to the parameters is blocked for a short time. Once the internal processing has been completed, the parameters can be changed once again.

11.2 Adjusting the operating language

Information (→ 64)

For information on the operating languages supported by the measuring device (→ 158)

11.3 Configuring the display

- Basic settings for local display (→ 71)
- Advanced settings for local display (→ 91)

11.4 Reading measured values

Using the **Measured values** submenu , it is possible to read all the measured values.

"Diagnostics" menu → Measured values

11.4.1 Process variables

The **Process variables** submenu contains all the parameters needed to display the current measured values for every process variable.

Navigation
"Diagnostics" menu → Measured values → Process variables

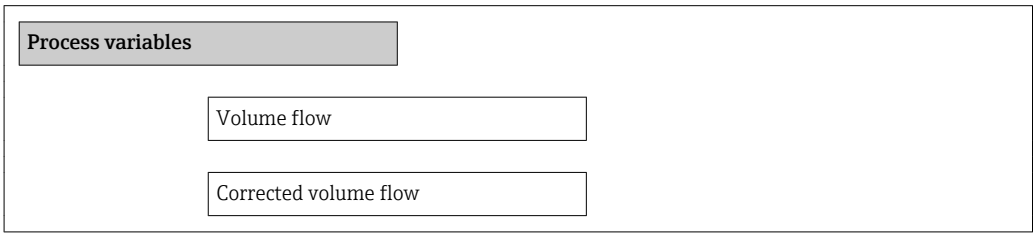

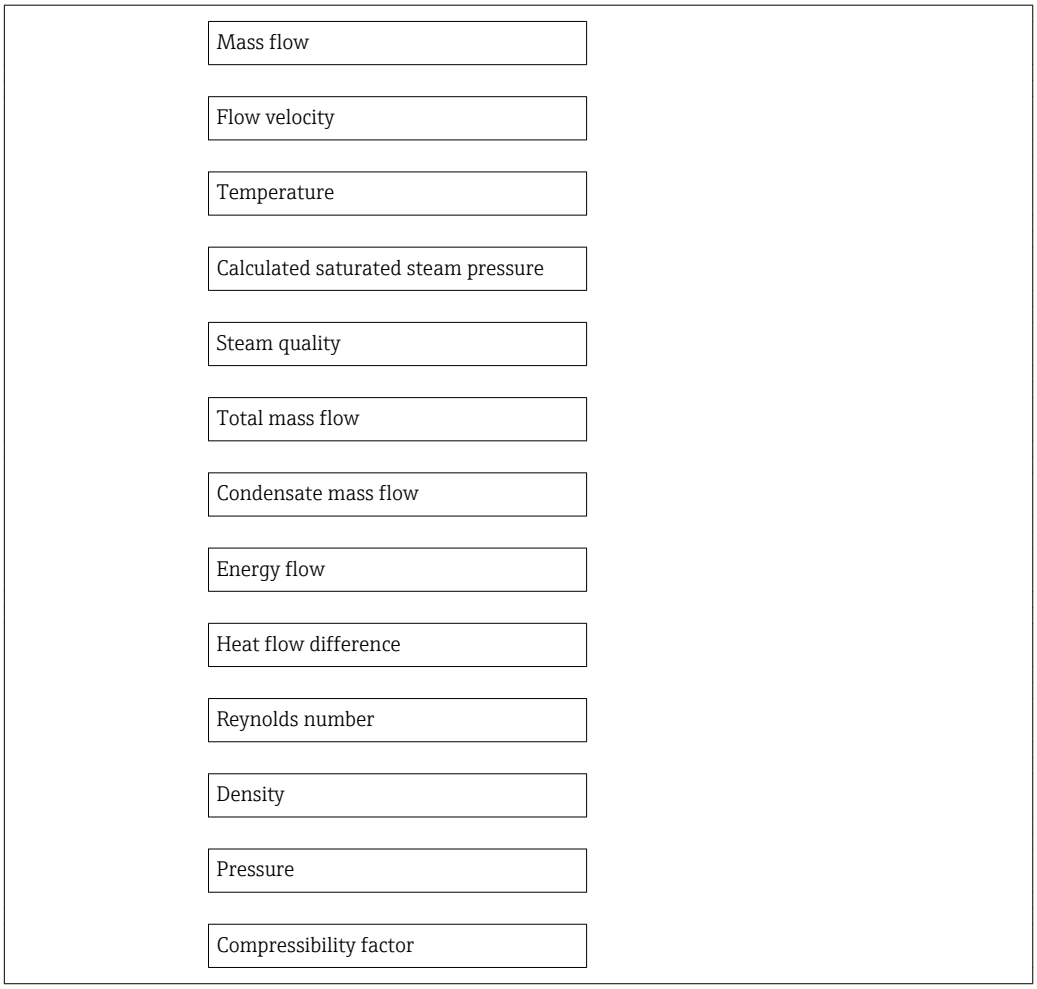

Parameter overview with brief description

Parameter	Description	User interface
Volume flow	Displays the volume flow currently measured.	Signed floating-point number
Corrected volume flow	Displays the corrected volume flow currently calculated.	Signed floating-point number
Mass flow	Displays the mass flow currently calculated.	Signed floating-point number
Flow velocity	Displays the flow velocity currently calculated.	Signed floating-point number
Temperature	Displays the temperature currently measured.	Signed floating-point number
Calculated saturated steam pressure	Displays the saturated steam pressure currently calculated.	Signed floating-point number
Steam quality	Displays the steam quality currently calculated.	Signed floating-point number
Total mass flow	Displays the total mass flow currently calculated.	Signed floating-point number
Condensate mass flow	Displays the condensate mass flow currently calculated.	Signed floating-point number
Energy flow	Displays the calculated energy flow.	Signed floating-point number
Heat flow difference	Displays the heat flow difference currently calculated.	Signed floating-point number
Reynolds number	Displays the Reynolds number currently calculated.	Signed floating-point number
Density	Displays the density currently measured.	Positive floating-point number
Pressure	Displays the pressure currently measured.	0 to 250 bar
Compressibility factor	Displays the compression factor currently measured.	0 to 2

11.4.2 Totalizer

The **"Totalizer" submenu** contains all the parameters needed to display the current measured values for every totalizer.

Navigation
"Diagnostics" menu → Measured values → Totalizer

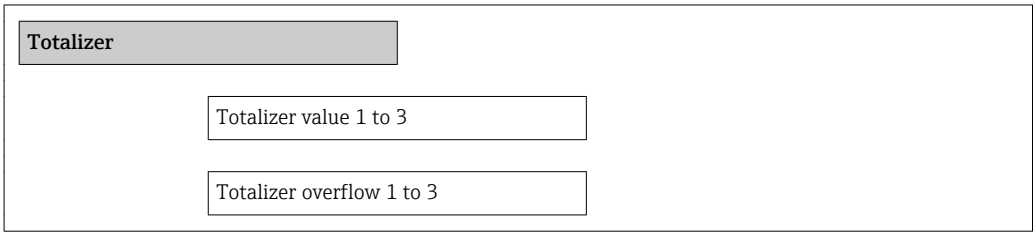

Parameter overview with brief description

Parameter	Prerequsite	Description	User interface	Factory setting
Totalizer value 1 to 3	In the **Assign process variable** parameter of **Totalizer 1 to 3** submenu one of the following options is selected: ▪ Volume flow ▪ Corrected volume flow ▪ Mass flow ▪ Total mass flow ▪ Condensate mass flow ▪ Energy flow ▪ Heat flow difference	Displays the current totalizer counter value.	Signed floating-point number	0 m^3
Totalizer overflow 1 to 3	In the **Assign process variable** parameter of **Totalizer 1 to 3** submenu one of the following options is selected: ▪ Volume flow ▪ Corrected volume flow ▪ Mass flow ▪ Total mass flow ▪ Condensate mass flow ▪ Energy flow ▪ Heat flow difference	Displays the current totalizer overflow.	−32 000.0 to 32 000.0	0

11.4.3 Output values

The **"Output values" submenu** contains all the parameters needed to display the current measured values for every output.

Navigation
"Diagnostics" menu → Measured values → Output values

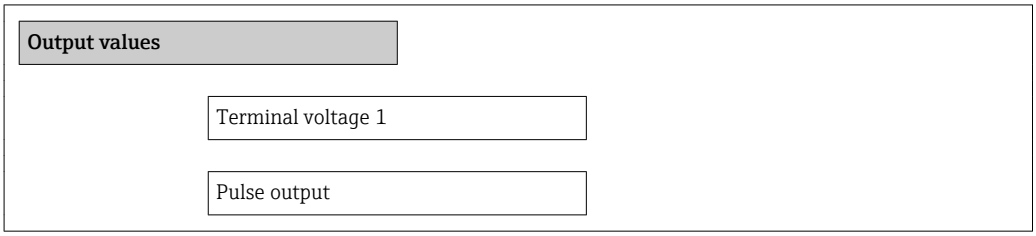

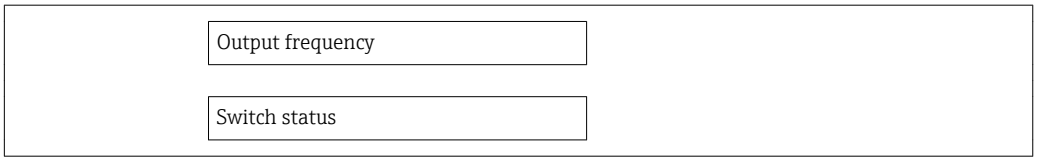

Parameter overview with brief description

Parameter	Description	User interface	Factory setting
Terminal voltage 1	Displays the current terminal voltage that is applied at the current output.	0.0 to 50.0 V	0 V
Pulse output	Displays the value currently measured for the pulse output.	Positive floating-point number	0 Hz
Output frequency	Displays the value currently measured for the frequency output.	0.0 to 1 250.0 Hz	0.0 Hz
Switch status	Displays the current switch output status.	▪ Open ▪ Closed	Open

11.5 Adapting the measuring device to the process conditions

The following are available for this purpose:
- Basic settings using the **Setup** menu(→ 🖹 65)
- Advanced settings using the **Advanced setup** submenu (→ 🖹 75)

11.6 Performing a totalizer reset

In the **Operation** submenu the totalizers are reset:
- Control Totalizer
- Reset all totalizers

Function scope of "Control Totalizer " parameter

Options	Description
Totalize	The totalizer is started.
Stop	Totalizing is stopped.
Reset + hold	The totaling process is stopped and the totalizer is reset to 0.
Preset + hold	The totaling process is stopped and the totalizer is set to its defined start value from the **Preset value** parameter.
Reset + totalize	The totalizer is reset to 0 and the totaling process is restarted.
Preset + totalize	The totalizer is set to the defined start value in **Preset value** parameterand the totaling process is restarted.

Function scope of "Reset all totalizers" parameter

Options	Description
Reset + totalize	Resets all totalizers to 0 and restarts the totaling process. This deletes all the flow values previously totalized.

Navigation
"Operation" menu → Operation

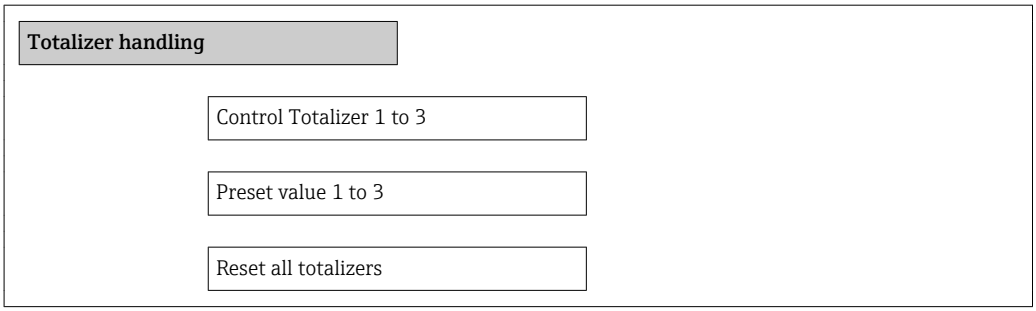

Parameter overview with brief description

Parameter	Description	Selection / User entry	Factory setting
Control Totalizer 1 to 3	Control totalizer value.	▪ Totalize ▪ Reset + hold ▪ Preset + hold ▪ Reset + totalize ▪ Preset + totalize	Totalize
Preset value 1 to 3	Specify start value for totalizer.	Signed floating-point number	0 m^3
Reset all totalizers	Reset all totalizers to 0 and start.	▪ Cancel ▪ Reset + totalize	Cancel

11.7 Showing data logging

In the device, the extended function of the HistoROM must be enabled (order option) so that the **"Data logging" submenu** appears. This contains all the parameters for the measured value history.

Function scope

- A total of 1000 measured values can be stored
- 4 logging channels
- Adjustable logging interval for data logging
- Display of the measured value trend for each logging channel in the form of a chart

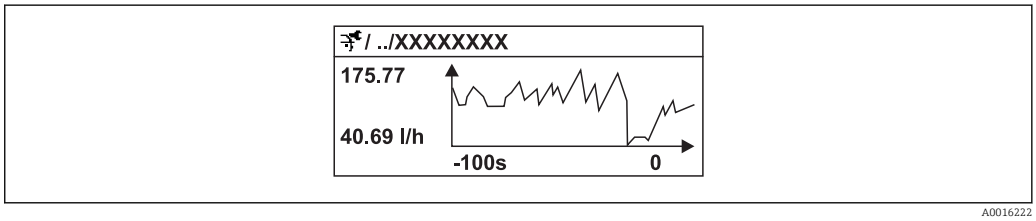

27 *Chart of a measured value trend*

- x-axis: depending on the number of channels selected displays 250 to 1000 measured values of a process variable.
- y-axis: displays the approximate measured value span and constantly adapts this to the ongoing measurement.

If the length of the logging interval or the assignment of the process variables to the channels is changed, the content of the data logging is deleted.

Navigation

"Diagnostics" menu → Data logging

"Data logging" submenu

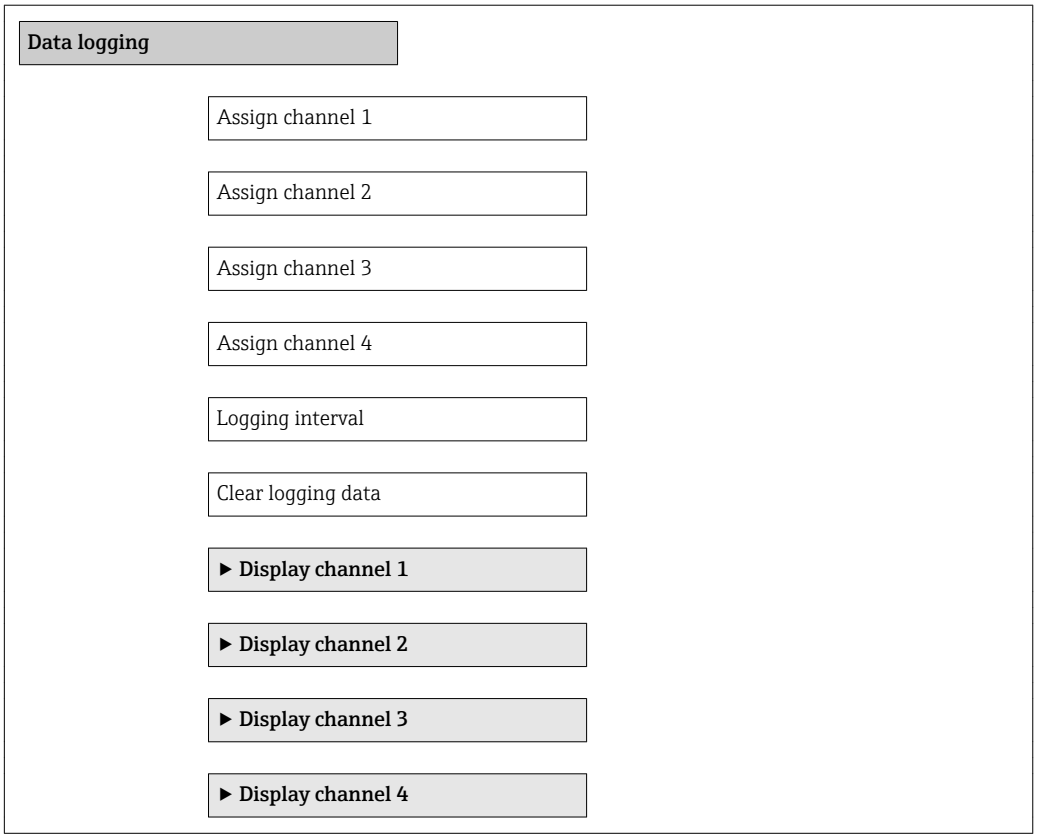

Parameter overview with brief description

Parameter	Description	Selection / User entry	Factory setting
Assign channel 1 to 4	Assign process variable to logging channel.	▪ Off ▪ Volume flow ▪ Corrected volume flow ▪ Mass flow ▪ Flow velocity ▪ Temperature ▪ Calculated saturated steam pressure ▪ Steam quality ▪ Total mass flow ▪ Condensate mass flow ▪ Energy flow ▪ Heat flow difference ▪ Reynolds number ▪ Current output 1 ▪ Current output 2 ▪ Density ▪ Vortex frequency ▪ Electronic temperature	Off
Logging interval	Define the logging interval for data logging. This value defines the time interval between the individual data points in the memory.	1.0 to 3 600.0 s	10.0 s
Clear logging data	Clear the entire logging data.	▪ Cancel ▪ Clear data	Cancel

12 Diagnostics and troubleshooting

12.1 General troubleshooting

For local display

Problem	Possible causes	Remedy
Local display dark and no output signals	Supply voltage does not match that specified on the nameplate.	Apply the correct supply voltage .
Local display dark and no output signals	Supply voltage has incorrect polarity.	Reverse polarity of supply voltage.
Local display dark and no output signals	No contact between connecting cables and terminals.	Check the connection of the cables and correct if necessary.
Local display dark and no output signals	Terminals are not plugged into the I/O electronics module correctly.	Check terminals.
Local display dark and no output signals	I/O electronics module is defective.	Order spare part (→ 🖹 128).
Local display is dark, but signal output is within the valid range	Display is set too bright or too dark.	▪ Set the display brighter by simultaneously pressing ⊞ + Ⓔ. ▪ Set the display darker by simultaneously pressing ⊟ + Ⓔ.
Local display is dark, but signal output is within the valid range	The cable of the display module is not plugged in correctly.	Insert the plug correctly into the main electronics module and display module.
Local display is dark, but signal output is within the valid range	Display module is defective.	Order spare part (→ 🖹 128).
Backlighting of local display is red	Diagnostic event with "Alarm" diagnostic behavior has occurred.	Take remedial measures (→ 🖹 118)
Text on local display appears in a foreign language and cannot be understood.	Incorrect operating language is configured.	1. Press ⊟ + ⊞ for 2 s ("home position"). 2. Press Ⓔ. 3. Set the desired language in the **Language** parameter.
Message on local display: "Communication Error" "Check Electronics"	Communication between the display module and the electronics is interrupted.	▪ Check the cable and the connector between the main electronics module and display module. ▪ Order spare part (→ 🖹 128).

For output signals

Problem	Possible causes	Remedy
Signal output outside the valid range	Main electronics module is defective.	Order spare part (→ 🖹 128).
Device shows correct value on local display, but signal output is incorrect, though in the valid range.	Configuration error	Check and correct parameter configuration.
Device measures incorrectly.	Configuration error or device is operated outside the application.	1. Check and correct parameter configuration. 2. Observe limit values specified in the "Technical Data".

For access

Problem	Possible causes	Remedy
No write access to parameters	Hardware write protection enabled	Set the write protection switch on the main electronics module to the OFF position (→ 🖹 97).
No write access to parameters	Current user role has limited access authorization	1. Check user role (→ 🖹 54). 2. Enter correct customer-specific access code (→ 🖹 54).
No connection via service interface	Incorrect configuration of USB interface on PC or driver not installed correctly.	Observe the documentation for the Commubox. FXA291: Document "Technical Information" TI00405C

12.2 Diagnostic information on local display

12.2.1 Diagnostic message

Faults detected by the self-monitoring system of the measuring device are displayed as a diagnostic message in alternation with the operational display.

Operational display in alarm condition	Diagnostic message

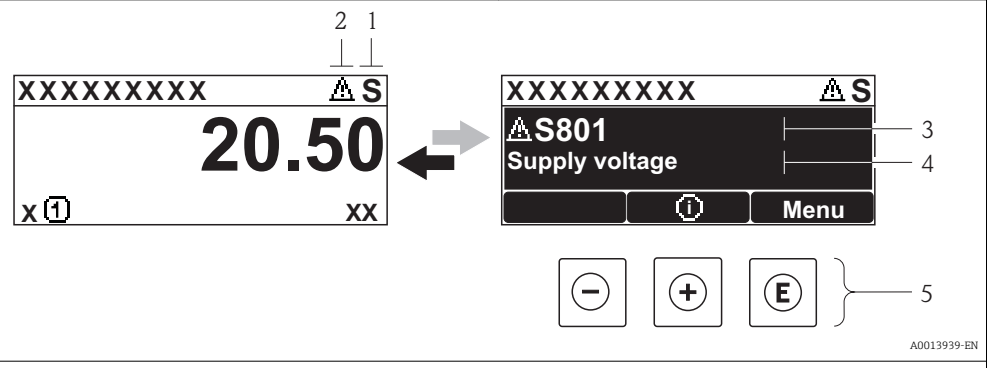

1 *Status signal*
2 *Diagnostic behavior*
3 *Diagnostic behavior with diagnostic code*
4 *Short text*
5 *Operating elements*

If two or more diagnostic events are pending simultaneously, only the message of the diagnostic event with the highest priority is shown.

Other diagnostic events that have occurred can be called up in the **Diagnostics** menu:
- Via parameters (→ 121)
- Via submenus (→ 122)

Status signals

The status signals provide information on the state and reliability of the device by categorizing the cause of the diagnostic information (diagnostic event).

The status signals are categorized according to VDI/VDE 2650 and NAMUR Recommendation NE 107: F = Failure, C = Function Check, S = Out of Specification, M = Maintenance Required

Symbol	Meaning
F A0013956	**Failure** A device error has occurred. The measured value is no longer valid.
C A0013959	**Function check** The device is in service mode (e.g. during a simulation).
S A0013958	**Out of specification** The device is operated: Outside its technical specification limits (e.g. outside the process temperature range)
M A0013957	**Maintenance required** Maintenance is required. The measured value remains valid.

Diagnostic behavior

Symbol	Meaning
A0013961	**Alarm** ▪ Measurement is interrupted. ▪ Signal outputs and totalizers assume the defined alarm condition. ▪ A diagnostic message is generated. ▪ For local display with touch control: the background lighting changes to red.
A0013962	**Warning** Measurement is resumed. The signal outputs and totalizers are not affected. A diagnostic message is generated.

Diagnostic information

The fault can be identified using the diagnostic information. The short text helps you by providing information about the fault. In addition, the corresponding symbol for the diagnostic behavior is displayed in front of the diagnostic information on the local display.

Operating elements

Key	Meaning
A0013970	**Plus key** *In a menu, submenu* Opens the message about the remedial measures.
A0013952	**Enter key** *In a menu, submenu* Opens the operating menu.

12.2.2 Calling up remedial measures

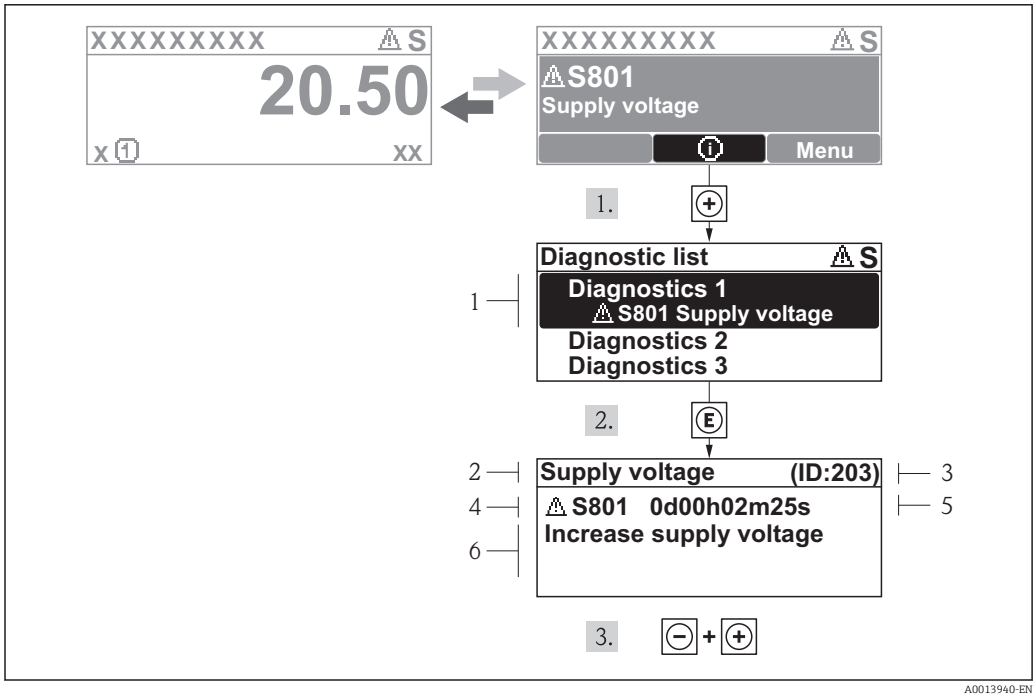

28 *Message for remedial measures*

1 *Diagnostic information*
2 *Short text*
3 *Service ID*
4 *Diagnostic behavior with diagnostic code*
5 *Operation time of occurrence*
6 *Remedial measures*

The user is in the diagnostic message.

1. Press ⊞ (ⓘ symbol).
   ↳ The **Diagnostic list** submenu opens.
2. Select the desired diagnostic event with ⊞ or ⊟ and press Ⓔ .
   ↳ The message for the remedial measures for the selected diagnostic event opens.
3. Press ⊟ + ⊞ simultaneously.
   ↳ The message for the remedial measures closes.

The user is in the **Diagnostics** menu at an entry for a diagnostics event, e.g. in the **Diagnostic list** submenu or the **Previous diagnostics** parameter.

1. Press Ⓔ.
   ↳ The message for the remedial measures for the selected diagnostic event opens.
2. Press ⊟ + ⊞ simultaneously.
   ↳ The message for the remedial measures closes.

12.3 Diagnostic information in FieldCare

12.3.1 Diagnostic options

Any faults detected by the measuring device are displayed on the home page of the operating tool once the connection has been established.

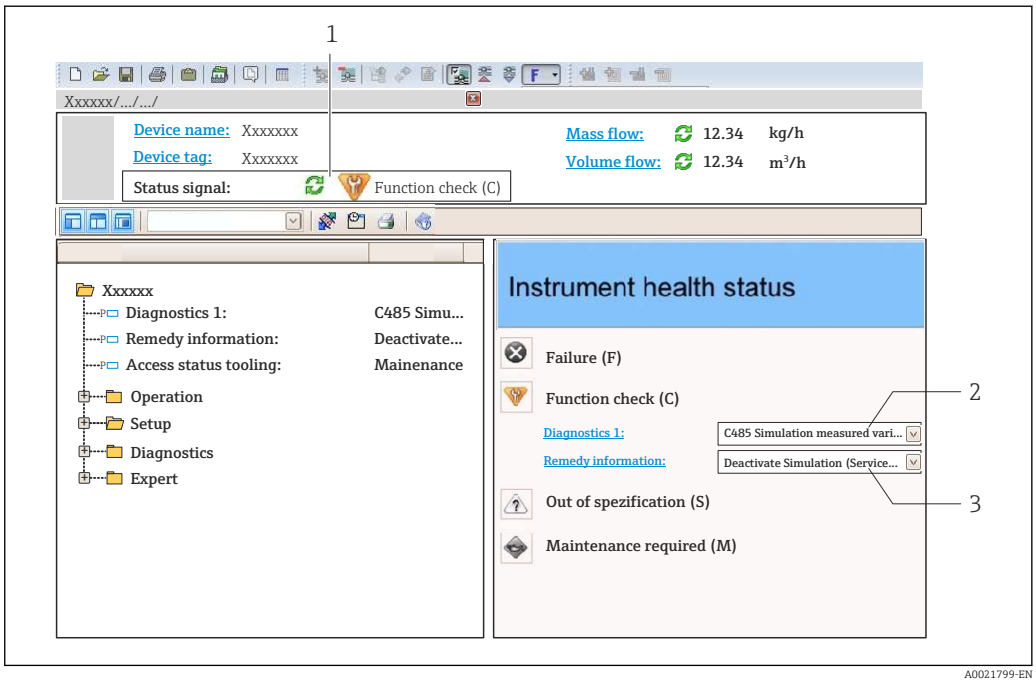

1 *Status area with status signal (→ 111)*
2 *Diagnostic information (→ 112)*
3 *Remedial measures with Service ID*

Furthermore, diagnostic events that have occurred can be viewed in the **Diagnostics** menu:
- Via parameters (→ 121)
- Via submenu (→ 122)

Diagnostic information

The fault can be identified using the diagnostic information. The short text helps you by providing information about the fault. In addition, the corresponding symbol for the diagnostic behavior is displayed in front of the diagnostic information on the local display.

12.3.2 Calling up remedy information

Remedy information is provided for every diagnostic event to ensure that problems can be rectified quickly:
- On the home page
  Remedy information is displayed in a separate field below the diagnostics information.
- In the **Diagnostics** menu
  Remedy information can be called up in the working area of the user interface.

The user is in the **Diagnostics** menu.

1. Call up the desired parameter.
2. On the right in the working area, mouse over the parameter.
   ↳ A tool tip with remedy information for the diagnostic event appears.

12.4 Adapting the diagnostic information

12.4.1 Adapting the diagnostic behavior

Each item of diagnostic information is assigned a specific diagnostic behavior at the factory. The user can change this assignment for certain diagnostic information in the **Diagnostic behavior** submenu .

"Expert" menu → System → Diagnostic handling → Diagnostic behavior

12.4.2 Adapting the status signal

Each item of diagnostic information is assigned a specific status signal at the factory. The user can change this assignment for certain diagnostic information in the **Diagnostic event category** submenu .

"Expert" menu → Communication → Diagnostic event category

Available status signals

Configuration as per FOUNDATION Fieldbus Specification (FF912), in accordance with NAMUR NE107.

Symbol	Meaning
F A0013956	**Failure** A device error has occurred. The measured value is no longer valid.
C A0013959	**Function check** The device is in service mode (e.g. during a simulation).
S A0013958	**Out of specification** The device is operated: ▪ Outside its technical specification limits (e.g. outside the process temperature range) ▪ Outside of the configuration carried out by the user (e.g. maximum flow in parameter **20 mA value**)
M A0013957	**Maintenance required** Maintenance is required. The measured value remains valid.

Enabling the configuration of the diagnostic information according to FF912

For compatibility reasons, the configuration of the diagnostic information according to FOUNDATION Fieldbus Specification FF912 is not enabled when the device is delivered from the factory.

Enabling the configuration of the diagnostic information according to FOUNDATION Fieldbus Specification FF912

1. Open the Resource Block.
2. In the **FEATURE_SEL** parameter select the **Multi-bit Alarm Support** option.
   ↳ The diagnostic information can be configured according to FOUNDATION Fieldbus Specification FF912.

Grouping the diagnostic information

Diagnostic information is assigned to different groups. The groups differ depending on the weighting (severity) of the diagnostic event:
- Highest weighting
- High weighting
- Low weighting

Assignment of the diagnostic information (default value)

The assignment of the diagnostic information ex-works is indicated in the following tables.

The individual ranges of the diagnostic information can be assigned to another status signal (→ 🖹 116).

Some diagnostic information can be assigned individually, irrespective of their range (→ 🖹 117)

Overview and description of all diagnostic information (→ 🖹 118)

Weighting	Status signal (factory setting)	Allocation	Diagnostic information range
Highest weighting	Failure (F)	Sensor	F000 to 199
		Electronics	F200 to 399
		Configuration	F400 to 700
		Process	F800 to 999

Weighting	Status signal (factory setting)	Allocation	Diagnostic information range
High weighting	Function check (C)	Sensor	C000 to 199
		Electronics	C200 to 399
		Configuration	C400 to 700
		Process	C800 to 999

Weighting	Status signal (factory setting)	Allocation	Diagnostic information range
Low weighting	Out of specification (S)	Sensor	S000 to 199
		Electronics	S200 to 399
		Configuration	S400 to 700
		Process	S800 to 999

Weighting	Status signal (factory setting)	Allocation	Diagnostic information range
Low weighting	Maintenance required (M)	Sensor	M000 to 199
		Electronics	M200 to 399
		Configuration	M400 to 700
		Process	M800 to 999

Changing the assignment of the diagnostic information

The individual ranges of the diagnostic information can be assigned to another status signal. This is done by changing the bit in the associated parameter. The bit change always applies for the entire range of the diagnostic information.

Some diagnostic information can be assigned individually, irrespective of their range (→ 117)

Each status signal has a parameter in the Resource Block in which it is possible to define the diagnostic event for which the status signal is transmitted:
- Failure (F): **FD_FAIL_MAP** parameter
- Function check (C): **FD_CHECK_MAP** parameter
- Out of specification (S): **FD_OFFSPEC_MAP** parameter
- Maintenance required (M): **FD_MAINT_MAP** parameter

Structure and assignment of the parameters for the status signals (factory setting)

Weighting	Allocation	Bit	FD_ FAIL_ MAP	FD_ CHECK_ MAP	FD_ OFFSPEC_ MAP	FD_ MAINT_ MAP
Highest weighting	Sensor	31	**1**	0	0	0
	Electronics	30	**1**	0	0	0
	Configuration	29	**1**	0	0	0
	Process	28	**1**	0	0	0
High weighting	Sensor	27	0	**1**	0	0
	Electronics	26	0	**1**	0	0
	Configuration	25	0	**1**	0	0
	Process	24	0	**1**	0	0
Low weighting	Sensor	23	0	0	**1**	0
	Electronics	22	0	0	**1**	0
	Configuration	21	0	0	**1**	0
	Process	20	0	0	**1**	0
Low weighting	Sensor	19	0	0	0	**1**
	Electronics	18	0	0	0	**1**
	Configuration	17	0	0	0	**1**
	Process	16	0	0	0	**1**
Configurable range (→ 117)		15 to 1	0	0	0	0
Reserved (Fieldbus Foundation)		0	0	0	0	0

Changing the status signal for a range of diagnostic information

Example: The status signal for the diagnostic information for electronics with the "Highest weighting" is to be changed from failure (F) to function check (C).

1. Set the Resource Block to the **OOS** block mode.
2. Open the **FD_FAIL_MAP** parameter in the Resource Block.
3. Change **Bit 30** to **0** in the parameter.
4. Open the **FD_CHECK_MAP** parameter in the Resource Block.
5. Change **Bit 26** to **1** in the parameter.
   ↳ If a diagnostic event occurs for electronics with the "Highest weighting", the diagnostic information to this effect is displayed with the function check (C) status signal.
6. Set the Resource Block to the **AUTO** block mode.

NOTICE

No status signal is assigned to an area of diagnostic information.
If a diagnostic event occurs in this area, no status signal is transmitted to the control system.
▶ If you are changing the parameters, make sure that a status signal is assigned to all areas.

If FieldCare is used, the status signal is enabled/disabled using the check box of the particular parameter.

Assigning diagnostic information individually to a status signal

Some diagnostic information can be individually assigned to a status signal, irrespective of their original range.

Assigning diagnostic information individually to a status signal via FieldCare

1. In the FieldCare navigation window: **Expert** → **Communication** → **Field diagnostics** → **Alarm detection enable**
2. Select the desired diagnostic information from one of the fields **Configurable Area Bits 1** to **Configurable Area Bits 15**.
3. Press Enter to confirm.
4. When selecting the desired status signal (e.g. Offspec Map), also select the **Configurable Area Bit 1** to **Configurable Area Bit 15** that was assigned previously to the diagnostic information (step 2).
5. Press Enter to confirm.
   ↳ The diagnostic event of the selected diagnostic information is recorded.
6. In the FieldCare navigation window: **Expert** → **Communication** → **Field diagnostics** → **Alarm broadcast enable**
7. Select the desired diagnostic information from one of the fields **Configurable Area Bits 1** to **Configurable Area Bits 15**.
8. Press Enter to confirm.
9. When selecting the desired status signal (e.g. Offspec Map), also select the **Configurable Area Bit 1** to **Configurable Area Bit 15** that was assigned previously to the diagnostic information (step 7).
10. Press Enter to confirm.
    ↳ The selected diagnostic information is transmitted over the bus when a diagnostic event to this effect occurs.

A status signal change does not affect diagnostic information that already exists. The new status signal is only assigned if this error occurs again after the change has been made.

Transmitting the diagnostic information over the bus

Prioritizing diagnostic information for transmission over the bus

Diagnostic information is only transmitted over the bus if its priority is between 2 and 15. Priority 1-events are displayed but are not transmitted over the bus. Diagnostic information with priority 0 (default value) is ignored.

It is possible to change the priority individually for the different status signals. The following parameters of the Resource Block are used for this purpose:
- FD_FAIL_PRI
- FD_CHECK_PRI
- FD_OFFSPEC_PRI
- FD_MAINT_PRI

Suppressing certain diagnostic information

It is possible to suppress certain events during transmission over the bus using a mask. While these events are displayed they are not transmitted over the bus. This mask is in FieldCare **Expert** → **Communication** → **Field diagnostics** → **Alarm broadcast enable**. The mask is a negative selection mask, i.e. if a field is selected the associated diagnostic information is not transmitted over the bus.

12.5 Overview of diagnostic information

The amount of diagnostic information and the number of measured variables affected increase if the measuring device has one or more application packages.

Diagnostic number	Short text	Remedy instructions	Status signal [from the factory]	Diagnostic behavior [from the factory]
Diagnostic of sensor				
004	Sensor defective	1. Check plug connections 2. Change pre-amplifier 3. Change DSC sensor	F	Alarm
022	Temperature sensor defective	1. Check plug connections 2. Change pre-amplifier 3. Change DSC sensor	F	Alarm [1)]
046	Sensor limit exceeded	1. Check plug connections 2. Change pre-amplifier 3. Change DSC sensor	S	Warning
062	Sensor connection defective	1. Check plug connections 2. Change pre-amplifier 3. Change DSC sensor	F	Alarm
082	Data storage	1.Change main electronic module 2.Change sensor	F	Alarm
083	Memory content	1. Restart device 2. Restore S-Dat data 3. Change sensor	F	Alarm
114	Sensor leaky	Change DSC sensor	F	Alarm
122	Temperature sensor defective	1. Check plug connections 2. Change pre-amplifier 3. Change DSC sensor	M	Warning [1)]
Diagnostic of electronic				
242	Software incompatible	1. Check software 2. Flash or change main electronics module	F	Alarm

Diagnostic number	Short text	Remedy instructions	Status signal [from the factory]	Diagnostic behavior [from the factory]
252	Modules incompatible	1. Check electronic modules 2. Change I/O or main electronic module	F	Alarm
261	Electronic modules	1. Restart device 2. Check electronic modules 3. Change I/O Modul or main electronics	F	Alarm
262	Module connection	1. Check module connections 2. Change electronic modules	F	Alarm
270	Main electronic failure	Change main electronic module	F	Alarm
271	Main electronic failure	1. Restart device 2. Change main electronic module	F	Alarm
272	Main electronic failure	1. Restart device 2. Contact service	F	Alarm
273	Main electronic failure	1. Emergency operation via display 2. Change main electronics	F	Alarm
275	I/O module failure	Change I/O module	F	Alarm
276	I/O module failure	1. Restart device 2. Change I/O module	F	Alarm
277	Electronics defective	1. Change pre-amplifier 2. Change main electronic module	F	Alarm
282	Data storage	1. Restart device 2. Contact service	F	Alarm
283	Memory content	1. Transfer data or reset device 2. Contact service	F	Alarm
302	Device verification active	Device verification active, please wait.	C	Warning
311	Electronic failure	1. Transfer data or reset device 2. Contact service	F	Alarm
311	Electronic failure	Maintenance required! 1. Do not perform reset 2. Contact service	M	Warning
350	Pre-amplifier defective	Change pre-amplifier	F	Alarm [1)]
351	Pre-amplifier defective	Change pre-amplifier	F	Alarm
370	Pre-amplifier defective	1. Check plug connections 2. Check cabel connection of remote version 3. Change pre-amplifier or main electronic module	F	Alarm
371	Temperature sensor defective	1. Check plug connections 2. Change pre-amplifier 3. Change DSC sensor	M	Warning [1)]
Diagnostic of configuration				
410	Data transfer	1. Check connection 2. Retry data transfer	F	Alarm
412	Processing Download	Download active, please wait	C	Warning
437	Configuration incompatible	1. Restart device 2. Contact service	F	Alarm

Diagnostic number	Short text	Remedy instructions	Status signal [from the factory]	Diagnostic behavior [from the factory]
438	Dataset	1. Check data set file 2. Check device configuration 3. Up- and download new configuration	M	Warning
442	Frequency output	1. Check process 2. Check frequency output settings	S	Warning [1]
443	Pulse output	1. Check process 2. Check pulse output settings	S	Warning [1]
453	Flow override	Deactivate flow override	C	Warning
482	Block in OOS	Set Block in AUTO mode	F	Alarm
484	Simulation failure mode	Deactivate simulation	C	Alarm
485	Simulation measured variable	Deactivate simulation	C	Warning
492	Simulation frequency output	Deactivate simulation frequency output	C	Warning
493	Simulation pulse output	Deactivate simulation pulse output	C	Warning
494	Switch output simulation	Deactivate simulation switch output	C	Warning
495	Simulation diagnostic event	Deactivate simulation	C	Warning
497	Simulation block output	Deactivate simulation	C	Warning
538	Flow computer configuration incorrect	Check input value (pressure, temperature)	S	Warning
539	Flow computer configuration incorrect	1. Check input value (pressure, temperature) 2. Check allowed values of the medium properties	S	Alarm
540	Flow computer configuration incorrect	Check entered reference value using the document Operating Instructions	S	Warning
570	Inverted delta heat	Check configuration of mounting location (parameter Installation direction)	F	Alarm
Diagnostic of process				
801	Supply voltage too low	Increase supply voltage	S	Warning
825	Operating temperature	1. Check ambient temperature 2. Check process temperature	F	Alarm
828	Ambient temperature too low	Increase ambient temperature of pre-amplifier	S	Warning [1]
829	Ambient temperature too high	Reduce ambient temperature of pre-amplifier	S	Warning [1]
832	Electronic temperature too high	Reduce ambient temperature	S	Warning [1]
833	Electronic temperature too low	Increase ambient temperature	S	Warning [1]
834	Process temperature too high	Reduce process temperature	S	Warning [1]
835	Process temperature too low	Increase process temperature	S	Warning [1]
841	Flow velocity too high	Reduce flow velocity	S	Warning [1]

Diagnostic number	Short text	Remedy instructions	Status signal [from the factory]	Diagnostic behavior [from the factory]
842	Process limit	Low flow cut off active! 1. Check low flow cut off configuration	S	Warning
844	Sensor range exceeded	Reduce flow velocity	S	Warning [1]
862	Partly filled pipe	1.Check for gas in process 2. Adjust detection limits	S	Warning
870	Measuring inaccuracy increased	1. Check process 2. Increase flow volume	S	Warning [1]
871	Near steam saturation limit	Check process conditions	S	Warning [1]
872	Wet steam detected	1. Check process 2. Check plant	S	Warning [1]
873	No steam detected	Check process (water in piping)	S	Warning [1]
874	Wet steam detection uncertain	1. Check pressure, temperature 2. Check flow velocity 3. Check for flow fluctuation	S	Warning
882	Input signal	1. Check input configuration 2. Check external device or process conditions	F	Alarm
945	Sensor range exceeded	Check immediately process conditions (pressure-temperature rating)	S	Warning [1]
946	Vibration detected	Check installation	S	Warning
947	Vibration exceeded	Check installation	S	Alarm [1]

1) Diagnostic status is changeable.

12.6 Pending diagnostic events

The **Diagnostics** menu allows the user to view the current diagnostic event and the previous diagnostic event separately.

To call up the measures to rectify a diagnostic event:
- Via local display (→ 112)
- Via "FieldCare" operating tool (→ 114)

Other pending diagnostic events can be displayed in the **Diagnostic list** submenu(→ 122)

Navigation

"Diagnostics" menu

Structure of the submenu

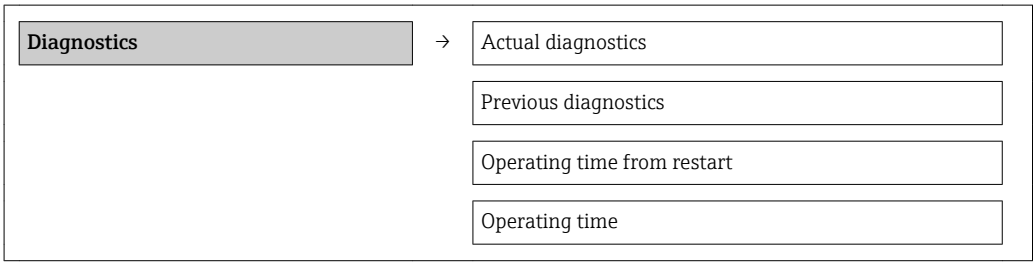

Parameter overview with brief description

Parameter	Prerequsite	Description	User interface	Factory setting
Actual diagnostics	1 diagnostic event has occurred.	Displays the current diagnostic event along with the diagnostic information. If two or more messages occur simultaneously, the message with the highest priority is shown on the display.	Symbol for diagnostic behavior, diagnostic code and short message.	–
Previous diagnostics	2 diagnostic events have already occurred.	Displays the diagnostic event that occurred prior to the current diagnostic event along with the diagnostic information.	Symbol for diagnostic behavior, diagnostic code and short message.	–
Operating time from restart	–	Shows the time the device has been in operation since the last device restart.	Days (d), hours (h), minutes (m), seconds (s)	
Operating time	–	Indicates how long the device has been in operation.	Days (d), hours (h), minutes (m), seconds (s)	–

12.7 Diagnostic messages in the DIAGNOSTIC Transducer Block

- The **Actual Diagnostics** parameter shows the message with the highest priority.
- You can view a list of the active alarms via the **Diagnostics 1** to **Diagnostics 5** parameters. If more than 5 messages are pending, the messages with the highest priority are shown on the display.
- You can view the last alarm that is no longer active via the **Previous Diagnostics** parameter.

12.8 Diagnostic list

In the **Diagnostic list** submenu, up to 5 currently pending diagnostic events can be displayed along with the related diagnostic information. If more than 5 diagnostic events are pending, the events with the highest priority are shown on the display.

Navigation path
Diagnostics menu→**Diagnostic list** submenu

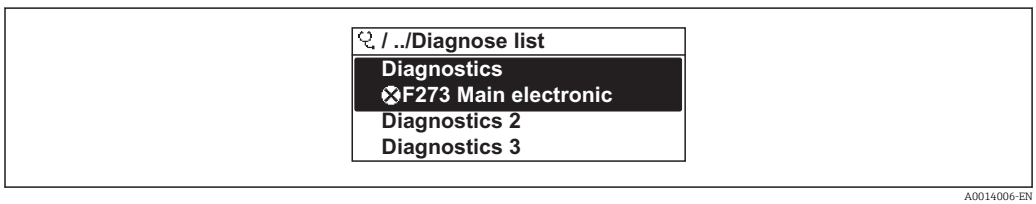

29 Illustrated using the example of the local display

To call up the measures to rectify a diagnostic event:
- Via local display (→ 112)
- Via "FieldCare" operating tool (→ 114)

12.9 Event logbook

12.9.1 Event history

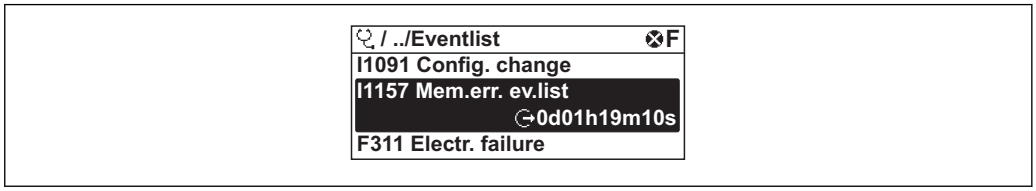

30 *Illustrated using the example of the local display*

To call up the measures to rectify a diagnostic event:
- Via local display (→ 112)
- Via "FieldCare" operating tool (→ 114)

For filtering the displayed event messages (→ 123)

12.9.2 Filtering the event logbook

Using the **Filter options** parameter, you can define which category of event messages is displayed in the **Events list** submenu.

Navigation path
"Diagnostics" menu → Event logbook → Filter options

Filter categories
- All
- Failure (F)
- Function check (C)
- Out of specification (S)
- Maintenance required (M)
- Information (I)

12.9.3 Overview of information events

Unlike a diagnostic event, an information event is displayed in the event logbook only and not in the diagnostic list.

Info number	Info name
I1000	--------(Device ok)
I1079	Sensor changed
I1089	Power on
I1090	Configuration reset
I1091	Configuration changed
I1092	Trend data deleted
I1110	Write protection switch changed
I1137	Electronic changed
I1151	History reset
I1154	Reset terminal voltage min/max
I1155	Reset electronic temperature
I1156	Memory error trend

Info number	Info name
I1157	Memory error event list
I1185	Display backup done
I1186	Restore via display done
I1187	Settings downloaded with display
I1188	Display data cleared
I1189	Backup compared
I1227	Sensor emergency mode activated
I1228	Sensor emergency mode failed
I1256	Display: access status changed
I1264	Safety sequence aborted
I1335	Firmware changed
I1397	Fieldbus: access status changed
I1398	CDI: access status changed
I1512	Download started
I1513	Download finished
I1514	Upload started
I1515	Upload finished

12.10 Resetting the measuring device

Using the **Device reset** parameter it is possible to reset the entire device configuration or some of the configuration to a defined state.

"Setup" menu → Advanced setup → Administration

Function scope of "Device reset" parameter

Options	Description
Cancel	No action is executed and the user exits the parameter.
To delivery settings	Every parameter for which a customer-specific default setting was ordered is reset to this customer-specific value. All other parameters are reset to the factory setting. This option is not visible if no customer-specific settings have been ordered.
Restart device	The restart resets every parameter whose data are in the volatile memory (RAM) to the factory setting (e.g. measured value data). The device configuration remains unchanged.
History reset	Every parameter is reset to its factory setting.

12.11 Device information

The **Device information** submenu contains all the parameters that display different information for identifying the device.

Navigation
"Diagnostics" menu → Device information

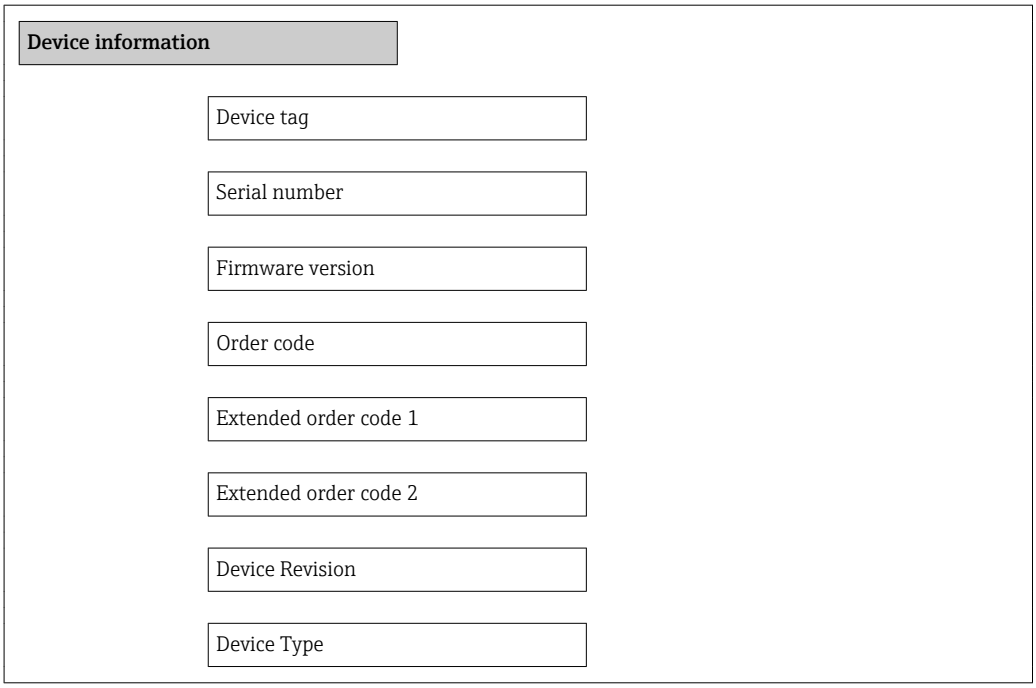

Parameter overview with brief description

Parameter	Description	User entry / User interface	Factory setting
Device tag	Enter the name for the measuring point.	Max. 32 characters, such as letters, numbers or special characters (e.g. @, %, /)	Prowirl 200
Serial number	Shows the serial number of the measuring device.	Max. 11-digit character string comprising letters and numbers.	
Firmware version	Shows the device firmware version installed.	Character string in the format: xx.yy.zz	
Order code	Extended order code 1.	Character string	–
Extended order code 1	Extended order code 2.	Character string	–
Extended order code 2	Extended order code 3.	Character string	–
Device Type	Displays the device type.	Prowirl 200	Prowirl 200
Device Revision	Manufacturer revision number associated with the resource - used by an interface device to locate the DD file for the resource.	0 to 255	1

12.12 Firmware history

Release date	Firmware version	Order code for "Firmware version"	Firmware changes	Documentation type	Documentation
07.2014	01.00.zz	Option **74**	Original firmware	Operating Instructions	BA01216D/06/EN/01.14

Flashing the firmware to the current version or to the previous version is possible via the service interface (CDI) (→ 156).

For the compatibility of the firmware version with the previous version, the installed device description files and operating tools, observe the information about the device in the "Manufacturer's information" document.

The manufacturer's information is available:
- In the Download Area of the Endress+Hauser Internet site: www.endress.com → Download
- Specify the following details:
  - Text search: Manufacturer's information
  - Search range: documentation

13 Maintenance

13.1 Maintenance tasks

No special maintenance work is required.

13.1.1 Exterior cleaning

When cleaning the exterior of measuring devices, always use cleaning agents that do not attack the surface of the housing or the seals.

13.1.2 Interior cleaning

NOTICE

The use of unsuitable equipment or cleaning liquids can damage the transducer.

- Do not use pigs to clean the pipe.

13.1.3 Replacing seals

Replacing sensor seals

NOTICE

Under normal circumstances, wetted seals must not be replaced.

Replacement is necessary only in special circumstances, for example if aggressive or corrosive fluids are incompatible with the seal material.

- The time span between the individual replacement procedures depends on the fluid properties.
- Only Endress+Hauser sensor seals may be used: replacement seals

Replacing housing seals

The housing seals must be clean and undamaged when inserted into their grooves. Dry, clean or replace the seals if necessary.

NOTICE

When the measuring device is used in a dusty atmosphere:

- only use the associated Endress+Hauser housing seals.

13.2 Measuring and test equipment

Endress+Hauser offers a wide variety of measuring and test equipment, such as W@M or device tests.

Your Endress+Hauser Sales Center can provide detailed information on the services.

For a list of some of the measuring and test equipment, refer to the "Accessories" chapter of the "Technical Information" document for the device.

13.3 Endress+Hauser services

Endress+Hauser offers a wide variety of services for maintenance such as recalibration, maintenance service or device tests.

Your Endress+Hauser Sales Center can provide detailed information on the services.

14 Repair

14.1 General notes

Repair and conversion concept
The Endress+Hauser repair and conversion concept provides for the following:
- The measuring devices have a modular design.
- Spare parts are grouped into logical kits with the associated Installation Instructions.
- Repairs are carried out by Endress+Hauser Service or by correspondingly trained customers.
- Certified devices can be converted into other certified devices by Endress+Hauser Service or at the factory only.

Notes for repair and conversion
For repair and modification of a measuring device, observe the following notes:
- Use only original Endress+Hauser spare parts.
- Carry out the repair according to the Installation Instructions.
- Observe the applicable standards, federal/national regulations, Ex documentation (XA) and certificates.
- Document every repair and each conversion and enter them into the *W@M* life cycle management database.

14.2 Spare parts

Some interchangeable measuring device components are listed on an overview sign in the connection compartment cover.

The spare part overview sign contains the following information:
- A list of the most important spare parts for the measuring device, including their ordering information.
- The URL for the *W@M Device Viewer* (www.endress.com/deviceviewer):
  All the spare parts for the measuring device, along with the order code, are listed here and can be ordered. If available, users can also download the associated Installation Instructions.

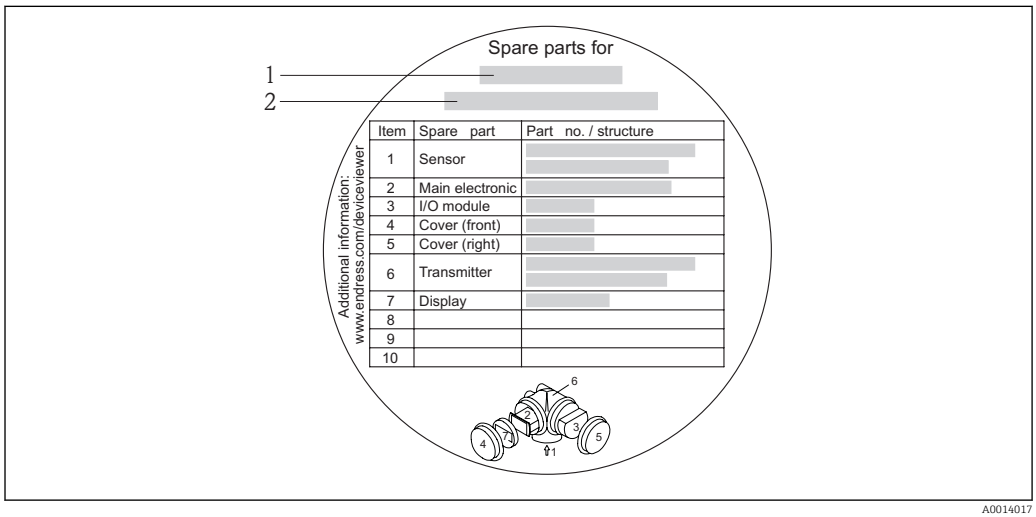

31 Example for "Spare part overview sign" in connection compartment cover

1 Measuring device name
2 Measuring device serial number

Measuring device serial number:
- Is located on the device nameplate and the spare part overview sign.
- Can be read out via the **Serial number** parameter in the **Device information** submenu (→ 124).

14.3 Endress+Hauser services

Contact your Endress+Hauser Sales Center for information on services and spare parts.

14.4 Return

The measuring device must be returned if repairs or a factory calibration are required, or if the wrong measuring device has been ordered or delivered. According to legal regulations, Endress+Hauser, as an ISO-certified company, is required to follow certain procedures when handling returned products that are in contact with medium.

To ensure swift, safe and professional device returns, please read the return procedures and conditions on the Endress+Hauser website at
www.services.endress.com/return-material

14.5 Disposal

14.5.1 Removing the measuring device

1. Switch off the device.
2. **WARNING!** Danger to persons from process conditions. Beware of hazardous process conditions such as pressure in the measuring device, high temperatures or aggressive fluids.
   Carry out the mounting and connection steps from the chapters "Mounting the measuring device" and "Connecting the measuring device" in the logically reverse sequence. Observe the safety instructions.

14.5.2 Disposing of the measuring device

⚠ WARNING

Danger to personnel and environment from fluids that are hazardous to health.

- ▶ Ensure that the measuring device and all cavities are free of fluid residues that are hazardous to health or the environment, e.g. substances that have permeated into crevices or diffused through plastic.

Observe the following notes during disposal:
- Observe valid federal/national regulations.
- Ensure proper separation and reuse of the device components.

15 Accessories

Various accessories, which can be ordered with the device or subsequently from Endress +Hauser, are available for the device. Detailed information on the order code in question is available from your local Endress+Hauser sales center or on the product page of the Endress+Hauser website: www.endress.com.

15.1 Device-specific accessories

15.1.1 For the transmitter

Accessories	Description
Prowirl 200 transmitter	Transmitter for replacement or for stock. Use the order code to define the following specifications: ▪ Approvals ▪ Output ▪ Display / operation ▪ Housing ▪ Software For details, see Installation Instructions EA01056D
Remote display FHX50	FHX50 housing to accommodate a display module (→ 157). ▪ FHX50 housing suitable for: – SD02 display module (push buttons) – SD03 display module (touch control) ▪ Housing material: – Plastic PBT – 316L ▪ Length of connecting cable: up to max. 60 m (196 ft) (cable lengths available for order: 5 m (16 ft), 10 m (32 ft), 20 m (65 ft), 30 m (98 ft)) The measuring device can be ordered with the FHX50 housing and a display module. The following options must be selected in the separate order codes: ▪ Order code for measuring device, feature 030: Option L or M "Prepared for FHX50 display" ▪ Order code for FHX50 housing, feature 050 (device version): Option A "Prepared for FHX50 display" ▪ Order code for FHX50 housing, depends on the desired display module in feature 020 (display, operation): – Option C: for an SD02 display module (push buttons) – Option E: for an SD03 display module (touch control) The FHX50 housing can also be ordered as a retrofit kit. The measuring device display module is used in the FHX50 housing. The following options must be selected in the order code for the FHX50 housing: ▪ Feature 050 (measuring device version): option B "Not prepared for FHX50 display" ▪ Feature 020 (display, operation): option A "None, existing displayed used" For details, see Special Documentation SD01007F
Overvoltage protection for 2-wire devices	Ideally, the overvoltage protection module should be ordered directly with the device. See product structure, characteristic 610 "Accessory mounted", option NA "Overvoltage protection". Separate order necessary only if retrofitting. ▪ OVP10: For 1-channel devices (characteristic 020, option A): ▪ OVP20: For 2-channel devices (characteristic 020, options B, C, E or G) For details, see Special Documentation SD01090F.
Weather protection cover	Is used to protect the measuring device from the effects of the weather: e.g. rainwater, excess heating from direct sunlight or extreme cold in winter. For details, see Special Documentation SD00333F

Connecting cable for remote version	▪ Connecting cable available in various lengths: – 5 m (16 ft) – 10 m (32 ft) – 20 m (65 ft) – 30 m (98 ft) ▪ Reinforced cables available on request. Standard length: 5 m (16 ft) Is always supplied if no other cable length has been ordered.
Post mounting kit	Post mounting kit for transmitter. The post mounting kit can only be ordered together with a transmitter.

15.1.2 For the sensor

Accessories	Description
Mounting kit	Mounting set for disc (wafer version) comprising: ▪ Tie rods ▪ Seals ▪ Nuts ▪ Washers For details, see Installation Instructions EA00075D
Flow conditioner	Is used to shorten the necessary inlet run.

15.2 Communication-specific accessories

Accessories	Description
Commubox FXA291	Connects Endress+Hauser field devices with a CDI interface (= Endress+Hauser Common Data Interface) and the USB port of a computer or laptop. For details, see the "Technical Information" document TI405C/07
Field Xpert SFX350	Field Xpert SFX350 is a mobile computer for commissioning and maintenance. It enables efficient device configuration and diagnostics for HART and FOUNDATION Fieldbus devices in the **non-Ex area**. For details, see Operating Instructions BA01202S
Field Xpert SFX370	Field Xpert SFX370 is a mobile computer for commissioning and maintenance. It enables efficient device configuration and diagnostics for HART and FOUNDATION Fieldbus devices in the **non-Ex area** and the **Ex area**. For details, see Operating Instructions BA01202S

15.3 Service-specific accessories

Accessories	Description
Applicator	Software for selecting and sizing Endress+Hauser measuring devices: ▪ Calculation of all the necessary data for identifying the optimum flowmeter: e.g. nominal diameter, pressure loss, accuracy or process connections. ▪ Graphic illustration of the calculation results Administration, documentation and access to all project-related data and parameters over the entire life cycle of a project. Applicator is available: ▪ Via the Internet: https://wapps.endress.com/applicator ▪ On CD-ROM for local PC installation.

W@M	Life cycle management for your plant W@M supports you with a wide range of software applications over the entire process: from planning and procurement, to the installation, commissioning and operation of the measuring devices. All the relevant device information, such as the device status, spare parts and device-specific documentation, is available for every device over the entire life cycle. The application already contains the data of your Endress+Hauser device. Endress +Hauser also takes care of maintaining and updating the data records. W@M is available: ▪ Via the Internet: www.endress.com/lifecyclemanagement ▪ On CD-ROM for local PC installation.
FieldCare	FDT-based plant asset management tool from Endress+Hauser. It can configure all smart field units in your system and helps you manage them. By using the status information, it is also a simple but effective way of checking their status and condition. For details, see Operating Instructions BA00027S and BA00059S

15.4 System components

Accessories	Description
Memograph M graphic display recorder	The Memograph M graphic display recorder provides information on all relevant measured variables. Measured values are recorded correctly, limit values are monitored and measuring points analyzed. The data are stored in the 256 MB internal memory and also on a SD card or USB stick. For details, see "Technical Information" TI00133R and Operating Instructions BA00247R
Cerabar M	The pressure transmitter for measuring the absolute and gauge pressure of gases, steam and liquids. It can be used to read in the operating pressure value. For details, see "Technical Information" TI00426P, TI00436P and Operating Instructions BA00200P, BA00382P
Cerabar S	The pressure transmitter for measuring the absolute and gauge pressure of gases, steam and liquids. It can be used to read in the operating pressure value. For details, see "Technical Information" TI00383P and Operating Instructions BA00271P

16 Technical data

16.1 Application

Depending on the version ordered, the measuring device can also measure potentially explosive, flammable, poisonous and oxidizing media.

To ensure that the device remains in proper operating condition for its service life, use the measuring device only for media against which the process-wetted materials are adequately resistant.

16.2 Function and system design

Measuring principle

Vortex meters work on the principle of the *Karman vortex street*.

Measuring system

The device consists of a transmitter and a sensor.

Two device versions are available:
- Compact version - the transmitter and sensor form a mechanical unit.
- Remote version – the transmitter and sensor are mounted separately from one another.

For information on the structure of the device (→ 🖹 11)

16.3 Input

Measured variable

Direct measured variables

Order code for *"Sensor version"*:
- Option 1 *"Volume flow, basis"* and
- Option 2 *"Volume flow, high-temperature/low temperature"*:
  Volume flow

Order code for *"Sensor version"*:
Option 3 *"Mass flow (integrated temperature measurement)"*:
– Volume flow
– Temperature

Calculated measured variables

Order code for *"Sensor version"*:
- Option 1 *"Volume flow, basis"* and
- Option 2 *"Volume flow, high-temperature/low temperature"*:
  – In the case of constant process conditions: Mass flow [1] or Corrected volume flow
  – The totalized values for Volume flow, Mass flow [1], or Corrected volume flow

Order code for *"Sensor version"*:
Option 3 *"Mass flow (integrated temperature measurement)"*:
– Mass flow
– Corrected volume flow
– Energy flow
– Heat flow difference
– Calculated saturated steam pressure

1) A fixed density must be entered for calculating the mass flow (**Setup** menu → **Advanced setup** submenu → **External compensation** submenu → **Fixed density** parameter).

Calculation of the measured variables

The meter electronics system of the Prowirl 200 unit with the order code *"Sensor version"*, option 3 *"Mass flow (integrated temperature measurement)"* has a flow computer. This computer can calculate the following secondary measured variables directly from the primary measured variables recorded using the pressure value (entered or external) and/or temperature value (measured or entered).

Mass flow and corrected volume flow

Medium	Fluid	Standards	Explanation
Steam [1]	Superheated steam [2]	IAPWS-IF97/ ASME	If the device features integrated temperature measurement and in the event of constant pressure, or if the pressure is read in via the current input/HART/PROFIBUS PA/ FOUNDATION Fieldbus
	Saturated steam		Possible with integrated temperature measurement
	Wet steam [3]		Steam with steam quality < 100 %
Gas	Single gas	NEL40	In the event of constant pressure, or if the pressure is read in via the current input/HART/PROFIBUS PA/FOUNDATION Fieldbus
	Gas mixture	NEL40	
	Air	NEL40	
	Natural gas	ISO 12213-2	Contains AGA8-DC92 In the event of constant pressure, or if the pressure is read in via the current input/HART/PROFIBUS PA/FOUNDATION Fieldbus
		AGA NX-19	In the event of constant pressure, or if the pressure is read in via the current input/HART/PROFIBUS PA/FOUNDATION Fieldbus
		ISO 12213-3	Contains SGERG-88, AGA8 Gross Method 1 In the event of constant pressure, or if the pressure is read in via the current input/HART/PROFIBUS PA/FOUNDATION Fieldbus
	Other gases	Linear equation	Ideal gases In the event of constant pressure, or if the pressure is read in via the current input/HART/PROFIBUS PA/FOUNDATION Fieldbus
Liquids	Water	IAPWS-IF97/ ASME	
	Liquefied gas	Tables	Propane and butane mixture
	Other liquid	Linear equation	Ideal liquids

1) The calculated values (mass flow, corrected volume flow) refer to the specific steam states for which the measuring device has been programmed (superheated steam, saturated steam or wet steam).
2) A warning is displayed if the steam state approaches the saturation line (2K; Diagnostic No. 871).
3) A warning is displayed if the steam quality drops below 80 % (Diagnostic No. 872).

Mass flow calculation

Volume flow × operating density
- Operating density for saturated steam, water and other liquids: depends on the temperature
- Operating density for superheated steam and all other gases: depends on the temperature and pressure

Corrected volume flow calculation

(Volume flow × operating density)/reference density
- Operating density for water and other liquids: depends on the temperature
- Operating density for all other gases: depends on the temperature and pressure

Energy flow

Medium	Fluid	Standards	Explanation	Heat/energy option
Steam [1]	Superheated steam [2]	IAPWS-IF97/ASME	In the event of constant pressure, or if the pressure is read in via the current input/HART/ PROFIBUS PA/ FOUNDATION Fieldbus	Heat Gross calorific value [3] in relation to mass Net calorific value [4] in relation to mass Gross calorific value [3] in relation to corrected volume Net calorific value [4] in relation to corrected volume
	Saturated steam			
	Wet steam [5]			
Gas	Single gas	ISO 6976	Contains GPA 2172 In the event of constant pressure, or if the pressure is read in via the current input/HART/ PROFIBUS PA/ FOUNDATION Fieldbus	
	Gas mixture	ISO 6976	Contains GPA 2172 In the event of constant pressure, or if the pressure is read in via the current input/HART/ PROFIBUS PA/ FOUNDATION Fieldbus	
	Air	NEL40	In the event of constant pressure, or if the pressure is read in via the current input/HART/ PROFIBUS PA/ FOUNDATION Fieldbus	
	Natural gas	ISO 6976	Contains GPA 2172 In the event of constant pressure, or if the pressure is read in via the current input/HART/ PROFIBUS PA/ FOUNDATION Fieldbus	
		AGA 5		
Liquids	Water	IAPWS-IF97/ASME		
	Liquefied gas	ISO 6976	Contains GPA 2172	
	Other liquid	Linear equation		

1) The calculated values (mass flow, corrected volume flow) refer to the specific steam states for which the measuring device has been programmed (superheated steam, saturated steam or wet steam).
2) A warning is displayed if the steam state approaches the saturation line (2K; Diagnostic No. 871).
3) Gross calorific value: combustion energy + condensation energy of the flue gas (gross calorific value > net calorific value)
4) Net calorific value: only combustion energy
5) A warning is displayed if the steam quality drops below 80 % (Diagnostic No. 872).

Mass flow and energy flow calculation

NOTICE

The process pressure (p) in the process pipe is required to calculate the process variables and the limit values of the measuring range.

- ▶ In the case of the FOUNDATION Fieldbus device, the process pressure can be read in from an external pressure transmitter (e.g. Cerabar-M) via the MAO Block or entered as a fixed value in the **External compensation** submenu (→ 🖹 81) .

The calculation is performed based on the following factors:

- Assuming superheated steam conditions the measuring device calculates until the saturation point is reached. Approaching 2 K above saturation, the diagnostic message ⚠**S871 Near steam saturation limit** is triggered (→ 🖹 118). The warning can be redefined as an alarm or can also be disabled (→ 🖹 114).
- If the temperature continues to drop, assuming saturated steam conditions the measuring device continues measuring up to a temperature of 0 °C (+32 °F). If pressure is the preferred measured variable, the **Saturated steam** option must be selected in the **Select steam type** parameter (→ 🖹 70) and the **Pressure** option must be selected in the **Saturated steam calculation mode** parameter (**Expert** menu → **Sensor** submenu → **Measurement mode** submenu → **Saturated steam calculation mode** parameter).

Calculated value

The unit calculates the mass flow, heat flow, energy flow, density and specific enthalpy from the measured volume flow and the measured temperature and/or the pressure based on international standard IAPWS-IF97 (ASME steam data).

Formulae for calculation:

- Mass flow: $m = q \cdot \rho\ (T, p)$
- Heat quantity: $E = q \cdot \rho\ (T, p) \cdot h_D\ (T, p)$

m = Mass flow

E = Heat quantity

q = Volume flow (measured)

h_D = Specific enthalpy

T = Operating temperature (measured)

p = Process pressure

ρ = Density [2)]

Pre-programmed gases

The following gases are pre-programmed in the flow computer:

Hydrogen [1)]	Helium 4	Neon	Argon
Krypton	Xenon	Nitrogen	Oxygen
Chlorine	Ammonia	Carbon monoxide [1)]	Carbon dioxide
Sulfur dioxide	Hydrogen sulfide [1)]	Hydrogen chloride	Methane [1)]
Ethane [1)]	Propane [1)]	Butane [1)]	Ethylene (ethene) [1)]
Vinyl chloride	Mixtures of up to 8 components of these gases [1)]		

1) The energy flow is calculated as per ISO 6976 (contains GPA 2172) or AGA5 - in relation to the net calorific value or gross calorific value .

2) From steam data as per IAPWS-IF97 (ASME), for the measured temperature and the specified pressure

Energy flow calculation

Volume flow × operating density × specific enthalpy
- Operating density for saturated steam and water: depends on the temperature
- Operating density for superheated steam, natural gas ISO 6976 (contains GPA 2172), natural gas AGA5: depends on the temperature and pressure

Heat flow difference

- Between saturated steam upstream from a heat exchanger and condensate downstream from the heat exchanger (second temperature read in via current input/HART/PROFIBUS PA/FOUNDATION Fieldbus) in accordance with IAPWS-IF97/ASME (→ 📄 24).
- Between warm water and cold water (second temperature read in via current input/HART/PROFIBUS PA/FOUNDATION Fieldbus) in accordance with IAPWS-IF97/ASME.

Vapor pressure and steam temperature

The measuring device can perform the following in saturated steam measurements between the feed line and return line of any heating liquid (second temperature read in via current input/HART/PROFIBUS PA/FOUNDATION Fieldbus and Cp value entered):
- Calculate the saturation pressure of the steam from the measured temperature and output the value in accordance with IAPWS-IF97/ASME.
- Calculate the saturation temperature of the steam from the specified pressure and output the value in accordance with IAPWS-IF97/ASME.

Saturated steam alarm

In applications involving the measurement of superheated steam, the measuring device can trigger a saturated steam alarm when the value approaches the saturation curve.

Total mass flow and condensate mass flow

- Using the steam quality entered, the measuring device can calculate the total mass flow and output it in the form of the proportion of gas and liquid.
- Using the steam quality entered, the measuring device can calculate the condensate mass flow and output it in the form of the proportion of liquid.

Measuring range

The measuring range depends on the fluid and nominal diameter.

Lower range value

Depends on the density and the Reynolds number (Re_{min} = 5 000, Re_{linear} = 20 000). The Reynolds number is dimensionless and indicates the ratio of the inertia force of a fluid to its viscous force. It is used to characterize the flow. The Reynolds number is calculated as follows:

$$Re = \frac{4 \cdot Q\ [m^3/s] \cdot \rho\ [kg/m^3]}{\pi \cdot di\ [m] \cdot \mu\ [Pa{\cdot}s]} \qquad Re = \frac{4 \cdot Q\ [ft^3/s] \cdot \rho\ [lb/ft^3]}{\pi \cdot di\ [ft] \cdot \mu\ [0.001\ cP]}$$

A0003794

Re = Reynolds number; Q = flow; di = internal diameter; μ = dynamic viscosity, ρ = density

$$\text{DN 15...150} \rightarrow \quad v_{min.} = \frac{6}{\sqrt{\rho\ [kg/m^3]}}\ [m/s]$$

$$\text{DN ½...6"} \rightarrow \quad v_{min.} = \frac{4.92}{\sqrt{\rho\ [lb/ft^3]}}\ [ft/s]$$

A0020557

Upper range value

Liquids:
The upper range value must be calculated as follows:
v_{max} = 9 m/s (30 ft/s) and v_{max} = 350/√ρ m/s (130/√ρ ft/s)

▶ Use the lower value.

Gas/steam:

Nominal diameter	v_{max}
Standard device: DN 15 (½")	46 m/s (151 ft/s) and 350/√ρ m/s (130/√ρ ft/s) (Use the lower value.)
Standard device: DN 25 (1"), DN 40 (1½")	75 m/s (246 ft/s) and 350/√ρ m/s (130/√ρ ft/s) (Use the lower value.)
Standard device: DN 50 to 150 (2 to 8")	120 m/s (394 ft/s) and 350/√ρ m/s (130/√ρ ft/s) (Use the lower value.) Calibrated range: up to 75 m/s (246 ft/s)

For information about the Applicator (→ 131)

Operable flow range

Up to 45: 1 (ratio between lower and upper range value)

Input signal

External measured values

To increase the accuracy of certain measured variables or to calculate the corrected volume flow, the automation system can continuously write different measured values to the measuring device:
- Operating pressure to increase accuracy (Endress+Hauser recommends the use of a pressure measuring device for absolute pressure, e.g. Cerabar M or Cerabar S)
- Medium temperature to increase accuracy (e.g. iTEMP)
- Reference density for calculating the corrected volume flow

- Various pressure transmitters can be ordered from Endress+Hauser: see "Accessories" section (→ 132)
- Please comply with the special mounting instructions when using pressure transmitters (→ 24)

It is recommended to read in external measured values to calculate the following measured variables:
- Energy flow
- Mass flow
- Corrected volume flow

Fieldbus

The measured values are written from the automation system to the measuring device via FOUNDATION Fieldbus.

16.4 Output

Output signal

Pulse/frequency/switch output

Function	Can be set to pulse, frequency or switch output
Version	Passive, open collector
Maximum input values	▪ DC 35 V ▪ 50 mA
Voltage drop	▪ For ≤2 mA: 2 V ▪ For 10 mA: 8 V
Residual current	≤0.05 mA
Pulse output	
Pulse width	Adjustable: 5 to 2 000 ms
Maximum pulse rate	100 Impulse/s
Pulse value	Adjustable
Assignable measured variables	▪ Total volume flow ▪ Total corrected volume flow ▪ Total mass flow ▪ Total energy flow ▪ Total heat flow difference
Frequency output	
Output frequency	Adjustable: 0 to 1 000 Hz
Damping	Adjustable: 0 to 999 s
Pulse/pause ratio	1:1

Assignable measured variables	▪ Volume flow ▪ Corrected volume flow ▪ Mass flow ▪ Flow velocity ▪ Temperature ▪ Calculated saturated steam pressure ▪ Steam quality ▪ Total mass flow ▪ Energy flow ▪ Heat flow difference
Switch output	
Switching behavior	Binary, conductive or non-conductive
Switching delay	Adjustable: 0 to 100 s
Number of switching cycles	Unlimited
Assignable functions	▪ Off ▪ On ▪ Diagnostic behavior ▪ Limit value – Volume flow – Corrected volume flow – Mass flow – Flow velocity – Temperature – Calculated saturated steam pressure – Steam quality – Total mass flow – Energy flow – Heat flow difference – Reynolds number – Totalizer 1-3 ▪ Status ▪ Status of low flow cut off

FOUNDATION Fieldbus

Signal encoding	Manchester Bus Powered (MBP)
Data transfer	31.25 KBit/s, Voltage mode

Signal on alarm

Depending on the interface, failure information is displayed as follows:

Pulse/frequency/switch output

Pulse output	
Failure mode	No pulses
Frequency output	
Failure mode	Choose from: ▪ Actual value ▪ Defined value: 0 to 1 250 Hz ▪ 0 Hz
Switch output	
Failure mode	Choose from: ▪ Current status ▪ Open ▪ Closed

FOUNDATION Fieldbus

Status and alarm messages	Diagnostics in accordance with FF-912
Error current FDE (Fault Disconnection Electronic)	0 mA

Local display

Plain text display	With information on cause and remedial measures
Backlight	Additionally for device version with SD03 local display: red lighting indicates a device error.

Status signal as per NAMUR recommendation NE 107

Operating tool

- Via digital communication:
  FOUNDATION Fieldbus
- Via service interface

Plain text display	With information on cause and remedial measures

Low flow cut off

The switch points for low flow cut off are user-selectable.

Galvanic isolation

All outputs are galvanically isolated from one another.

Protocol-specific data

FOUNDATION Fieldbus

Manufacturer ID	0x452B48
Ident number	0x1038
Device revision	1
DD revision	Information and files under: ▪ www.endress.com ▪ www.fieldbus.org
CFF revision	
Device Tester Version (ITK version)	6.1.1
ITK Test Campaign Number	IT094200
Link Master capability (LAS)	Yes
Choice of "Link Master" and "Basic Device"	Yes Factory setting: Basic Device
Node address	Factory setting: 247 (0xF7)
Supported functions	The following methods are supported: ▪ Restart ▪ ENP Restart ▪ Diagnostic
Virtual Communication Relationships (VCRs)	
Number of VCRs	44
Number of link objects in VFD	50
Permanent entries	1

Client VCRs	0
Server VCRs	10
Source VCRs	43
Sink VCRs	0
Subscriber VCRs	43
Publisher VCRs	43
Device Link Capabilities	
Slot time	4
Min. delay between PDU	8
Max. response delay	Min. 5

Transducer Blocks

Block	Contents	Output values
Setup Transducer Block (TRDSUP)	All parameters for standard commissioning.	No output values
Advanced Setup Transducer Block (TRDASUP)	All parameters for more accurate measurement configuration.	No output values
Display Transducer Block (TRDDISP)	Parameters for configuring the local display.	No output values
HistoROM Transducer Block (TRDHROM)	Parameters for using the HistoROM function.	No output values
Diagnostic Transducer Block (TRDDIAG)	Diagnostics information.	Process variables (AI Channel) ▪ Mass flow (11) ▪ Flow velocity (37) ▪ Condensate mass flow (47) ▪ Total mass flow (46) ▪ Volume flow (9) ▪ Corrected volume flow (13) ▪ Temperature (7) ▪ Calculated saturated steam pressure (45) ▪ Steam quality (48) ▪ Energy flow (38) ▪ Heat flow difference (49) ▪ Reynolds number (50)
Expert Configuration Transducer Block (TRDEXP)	Parameters that require the user to have in-depth knowledge of the operation of the device in order to configure the parameters appropriately.	No output values
Expert Information Transducer Block (TRDEXPIN)	Parameters that provide information about the state of the device.	No output values
Service Sensor Transducer Block (TRDSRVS)	Parameters that can only be accessed by Endress +Hauser Service.	No output values
Service Information Transducer Block (TRDSRVIF)	Parameters that provide Endress+Hauser Service with information about the state of the device.	No output values
Total Inventory Counter Transducer Block (TRDTIC)	Parameters for configuring all the totalizers and the inventory counter.	Process variables (AI Channel) ▪ Totalizer 1 (16) ▪ Totalizer 2 (17) ▪ Totalizer 3 (18)

Block	Contents	Output values
Heartbeat Technology Transducer Block (TRDHBT)	Parameters for the configuration and comprehensive information about the results of the verification.	No output values
Heartbeat Results 1 Transducer Block (TRDHBTR1)	Information about the results of the verification.	No output values
Heartbeat Results 2 Transducer Block (TRDHBTR2)	Information about the results of the verification.	No output values
Heartbeat Results 3 Transducer Block (TRDHBTR3)	Information about the results of the verification.	No output values
Heartbeat Results 4 Transducer Block (TRDHBTR4)	Information about the results of the verification.	No output values

Function blocks

Block	Number of Blocks	Contents	Process variables (Channel)
Resource Block (RB)	1	This Block (extended functionality) contains all the data that uniquely identify the device; it is the equivalent of an electronic nameplate for the device.	–
Analog Input Block (AI)	4	This Block (extended functionality) receives the measurement data provided by the Sensor Block (can be selected via a channel number) and makes the data available for other blocks at the output. **Execution time:** 13 ms	▪ Temperature (7) ▪ Mass flow (11) ▪ Volume flow (9) ▪ Corrected volume flow (13) ▪ Flow velocity (37) ▪ Energy flow (38) ▪ Calculated saturated steam pressure (45) ▪ Total mass flow (46) ▪ Condensate mass flow (47) ▪ Steam quality (48) ▪ Heat flow difference (49) ▪ Reynolds number (50)
Discrete Input Block (DI)	1	This Block (standard functionality) receives a discrete value (e.g. indicator that measuring range has been exceeded) and makes the value available for other blocks at the output. **Execution time:** 12 ms	▪ Status switch output (101) ▪ Low flow cutoff (103) ▪ Status verification (105)
PID Block (PID)	1	This Block (standard functionality) acts as a proportional-integral-differential controller and can be used universally for control in the field. It enables cascading and feedforward control. **Execution time:** 13 ms	–
Multiple Analog Output Block (MAO)	1	This Block (standard functionality) receives several analog values and makes them available for other blocks at the output. **Execution time:** 11 ms	Channel_0 (121) ▪ Value 1: External compensation variables (pressure, gage pressure, density, temperature or second temperature) ▪ Value 2 to 8: Not assigned The compensation variables must be transmitted to the device in the SI basic unit.

Block	Number of Blocks	Contents	Process variables (Channel)
Multiple Digital Output Block (MDO)	1	This Block (standard functionality) receives several discrete values and makes them available for other blocks at the output. **Execution time:** 14 ms	Channel_DO (122) ▪ Value 1: Reset totalizer 1 ▪ Value 2: Reset totalizer 2 ▪ Value 3: Reset totalizer 3 ▪ Value 4: Flow override ▪ Value 5: Start heartbeat verification ▪ Value 6: Status switch output ▪ Value 7: Not assigned ▪ Value 8: Not assigned
Integrator Block (IT)	1	This Block (standard functionality) integrates a measured variable over time or totalizes the pulses from a Pulse Input Block. The Block can be used as a totalizer that totalizes until a reset, or as a batch totalizer whereby the integrated value is compared against a target value generated before or during the control routine and generates a binary signal when the target value is reached. **Execution time:** 16 ms	–

16.5 Power supply

Terminal assignment

(→ 31)

Supply voltage

Transmitter

An external power supply is required for each output. The following supply voltage values apply for FOUNDATION Fieldbus and the pulse/frequency/switch output:

Supply voltage for a compact version without a local display [1)]

Order code for "Output"	Minimum terminal voltage [2)]	Maximum terminal voltage
Option **E** : FOUNDATION Fieldbus, pulse/ frequency/switch output	≥DC 9 V	DC 32 V

1) In event of external supply voltage of the power supply unit with load
2) The minimum terminal voltage increases if local operation is used: see the following table

Increase in minimum terminal voltage

Local operation	Increase in minimum terminal voltage
Order code for *"Display; Operation"*, option **C**: Local operation SD02	+ DC 1 V
Order code for *"Display; Operation"*, option **E**: Local operation SD03 with lighting (backlighting **not used**)	+ DC 1 V
Order code for *"Display; Operation"*, option **E**: Local operation SD03 with lighting (backlighting **used**)	+ DC 3 V

Power consumption

Transmitter

Order code for "Output"	Maximum power consumption
Option **E**: FOUNDATION Fieldbus, pulse/ frequency/switch output	▪ Operation with output 1: 512 mW ▪ Operation with output 1 and 2: 2 512 mW

Current consumption

FOUNDATION Fieldbus

15 mA

Power supply failure

- Totalizers stop at the last value measured.
- Configuration is retained in the device memory (HistoROM).
- Error messages (incl. total operated hours) are stored.

Electrical connection

(→ 🖹 34)

Potential equalization

Requirements

Please consider the following to ensure correct measurement:
- Same electrical potential for the fluid and sensor
- Remote version: same electrical potential for the sensor and transmitter
- Company-internal grounding concepts
- Pipe material and grounding

For devices intended for use in hazardous locations, please observe the guidelines in the Ex documentation (XA).

Terminals

- For device version without integrated overvoltage protection: plug-in spring terminals for wire cross-sections 0.5 to 2.5 mm² (20 to 14 AWG)
- For device version with integrated overvoltage protection: screw terminals for wire cross-sections 0.2 to 2.5 mm² (24 to 14 AWG)

Cable entries

- Cable gland: M20 × 1.5 with cable Φ6 to 12 mm (0.24 to 0.47 in)
- Thread for cable entry:
  - NPT ½"
  - G ½"

Cable specification

(→ 🖹 29)

Overvoltage protection

The device can be ordered with integrated overvoltage protection for diverse approvals:
Order code for "Accessory mounted", option NA "Overvoltage protection"

Input voltage range	Values correspond to supply voltage specifications (→ 🖹 33) [1]
Resistance per channel	2 ·0.5 Ω max
DC sparkover voltage	400 to 700 V
Trip surge voltage	<800 V
Capacitance at 1 MHz	<1.5 pF
Nominal discharge current (8/20 µs)	10 kA
Temperature range	–40 to +85 °C (–40 to +185 °F)

1) The voltage is reduced by the amount of the internal resistance $I_{min} \cdot R_i$

Depending on the temperature class, restrictions apply to the ambient temperature for device versions with overvoltage protection .

For detailed information on the temperature tables, see the separate document entitled "Safety Instructions" (XA) for the device.

16.6 Performance characteristics

Reference operating conditions

- Error limits following ISO/DIN 11631
- +20 to +30 °C (+68 to +86 °F)
- 2 to 4 bar (29 to 58 psi)
- Calibration system traceable to national standards
- Calibration with the process connection corresponding to the particular standard

To obtain measured errors, use the *Applicator* sizing tool (→ 160)

Maximum measured error

Base accuracy

o.r. = of reading; o.f.s. = of full scale value, Re = Reynolds number

Volume flow

The measured error for the volume flow is as follows depending on the Reynolds number and the compressibility of the medium under measurement:

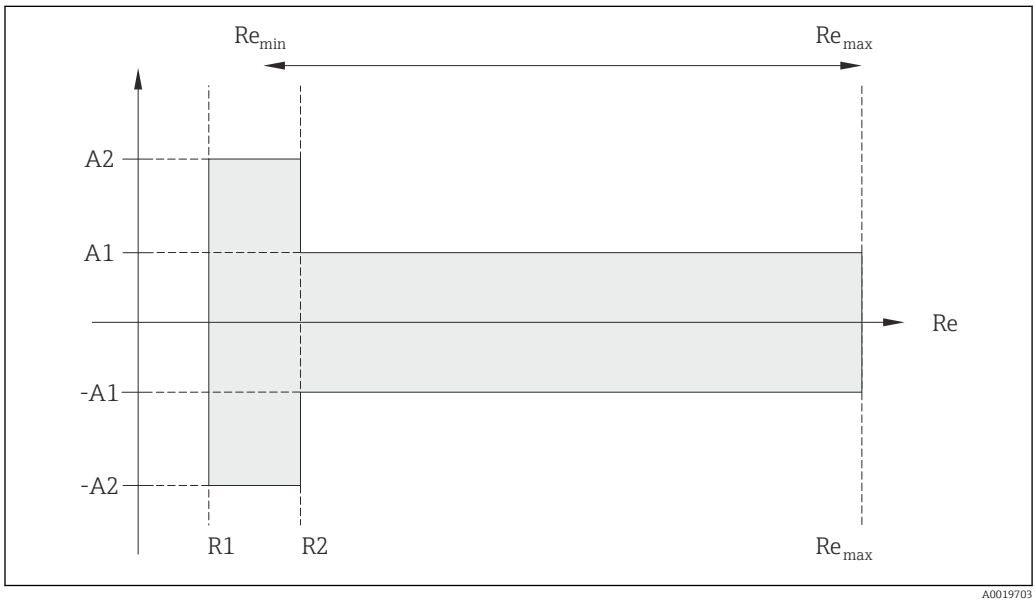

Deviation of volume flow value (absolute) from the reading			
Medium type		Incompressible	Compressible [1]
Re range	Measured value deviation	Standard	Standard
R1 to R2	A2	< 10 %	< 10 %
R2 to Re_{max}	A1	< 0.75 %	< 1.0 %

1) Accuracy specifications valid up to 75 m/s (246 ft/s)

Reynolds numbers	Incompressible	Compressible
	Standard	Standard
R1	5 000	
R2	20 000	

Temperature
- Saturated steam and liquids at room temperature if T > 100 °C (212 °F) applies: < 1 °C (1.8 °F)
- Gas: < 1 % o.r. [K]

Rise time 50 % (stirred under water, following IEC 60751): 8 s

Mass flow (saturated steam)
- Flow velocities 20 to 50 m/s (66 to 164 ft/s), T > 150 °C (302 °F) or (423 K)
  - Re > 20 000: < 1.7 % o.r.
  - Re between 5 000 to 20 000: < 1.7 % o.f.s.
- Flow velocities 10 to 70 m/s (33 to 210 ft/s), T > 140 °C (284 °F) or (413 K)
  - Re > 20 000: < 2 % o.r.
  - Re between 5 000 to 20 000: < 2 % o.f.s.

The use of a Cerabar S is required for the measured errors listed in the following section. The measured error used to calculate the error in the measured pressure is 0.15%.

Mass flow of superheated steam and gas (single gas, gas mixture, air: NEL40; natural gas: ISO 12213-2 contains AGA8-DC92, AGA NX-19, ISO 12213-3 contains SGERG-88 and AGA8 Gross Method 1)
- Re > 20 000 and process pressure < 40 bar abs. (580 psi abs.): 1.7 % o.r.
- Re between 5 000 to 20 000 and process pressure < 40 bar abs. (580 psi abs.): 1.7 % o.f.s.
- Re > 20 000 and process pressure < 120 bar abs. (1 740 psi abs.): 2.6 % o.r.
- Re between 5 000 to 20 000 and process pressure < 120 bar abs. (1 740 psi abs.) abs: 2.6 % o.f.s.

abs. = absolute

Mass flow (water)
- Re 20 000: < 0.85 % o.r.
- Re between 5 000 to 20 000: < 0.85 % o.f.s.

Mass flow (user-defined liquids)

To specify the system accuracy, Endress+Hauser requires information about the type of liquid and its operating temperature or information in table form about the dependency between the liquid density and the temperature.

Example
- Acetone is to be measured at fluid temperatures between +70 to +90 °C (+158 to +194 °F).
- For this purpose the **Reference temperature** parameter (7703) (here 80 °C (176 °F)), **Reference density** parameter (7700) (here 720.00 kg/m^3) and **Linear expansion coefficient** parameter (7621) (here 18.0298 × 10^{-4} 1/°C) must be entered in the transmitter.
- The overall system uncertainty, which is smaller than 0.9 % for the example above, is comprised of the following uncertainties of measurement: uncertainty of volume flow measurement, uncertainty of temperature measurement, uncertainty of the density-temperature correlation used (incl. the resulting uncertainty of density).

Mass flow (other media)
Depends on the selected fluid and the pressure value, which is specified in the parameters. Individual error analysis must be performed.

Diameter mismatch correction

Prowirl 200 can correct shifts in the calibration factor which are caused, for example, by diameter mismatch between the device flange (e.g. ASME B16.5/Sch. 80, DN 50 (2")) and the mating pipe (e.g. ASME B16.5/Sch. 40, DN 50 (2")). Only apply diameter mismatch correction within the following limit values (listed below) for which test measurements have also been performed.

Disc (wafer flange):
- DN 15 (½"): ±15 % of the internal diameter
- DN 25 (1"): ±12 % of the internal diameter
- DN 40 (1½"): ±9 % of the internal diameter
- DN ≥ 50 (2"): ±8 % of the internal diameter

If the standard internal diameter of the ordered process connection differs from the internal diameter of the mating pipe, an additional measuring uncertainty of approx. 2 % o.r. must be expected.

Example
Influence of the diameter mismatch without using the correction function:
- Mating pipe DN 100 (4"), schedule 80
- Device flange DN 100 (4"), schedule 40
- This installation position results in a diameter mismatch of 5 mm (0.2 in). If the correction function is not used, an additional measuring uncertainty of approx. 2 % o.r. must be expected.

Accuracy of outputs

o.r. = of reading

Current output

Accuracy	±10 µA

Pulse/frequency output

Accuracy	Max. ±100 ppm o.r.

Repeatability

o.r. = of reading

±0.2 % o.r.

Response time

If all the configurable functions for filter times (flow damping, display damping, current output time constant, frequency output time constant, status output time constant) are set to 0, in the event of vortex frequencies of 10 Hz and higher a response time of max(T_v, 100 ms) can be expected.

In the event of measuring frequencies < 10 Hz, the response time is > 100 ms and can be up to 10 s. T_v is the average vortex period duration of the flowing fluid.

Influence of ambient temperature

o.r. = of reading

Pulse/frequency output

Temperature coefficient	Max. ±100 ppm o.r.

16.7 Installation

"Mounting requirements" (→ 19)

16.8 Environment

Ambient temperature range	(→ 22) **Temperature tables** Observe the interdependencies between the permitted ambient and fluid temperatures when operating the device in hazardous areas. For detailed information on the temperature tables, see the separate document entitled "Safety Instructions" (XA) for the device.
Storage temperature	All components apart from the display modules: −50 to +80 °C (−58 to +176 °F) Display modules: −40 to +80 °C (−40 to +176 °F)
Climate class	DIN EN 60068-2-38 (test Z/AD)
Degree of protection	**Transmitter** ▪ As standard: IP66/67, type 4X enclosure ▪ When housing is open: IP20, type 1 enclosure ▪ Display module: IP20, type 1 enclosure **Sensor** IP66/67, type 4X enclosure
Vibration resistance	▪ For compact/remote version made of coated aluminum and remote version made of stainless steel: Acceleration up to 2g (if gain set to factory setting), 10 to 500 Hz, following IEC 60068-2-6 ▪ For the compact version made of stainless steel: Acceleration up to 1g (if gain set to factory setting), 10 to 500 Hz, following IEC 60068-2-6
Electromagnetic compatibility (EMC)	As per IEC/EN 61326 and NAMUR Recommendation 21 (NE 21) For details refer to the Declaration of Conformity.

16.9 Process

Medium temperature range

DSC sensor [3]
Order code for *"Sensor version"*:
- Option 1 *"Volume flow, basis"*:
  −40 to +260 °C (−40 to +500 °F), stainless steel
- Option 2 *"Volume flow, high-temperature/low temperature"*:
  −200 to +400 °C (−328 to +752 °F), stainless steel
- Option 3 *"Mass flow (integrated temperature measurement)"*:
  −200 to +400 °C (−328 to +752 °F), stainless steel

DSC sensor [3]
Order code for *"Sensor option"*:
Option CD *"Harsh environment, DSC sensor components, Alloy C22"*:
−200 to +400 °C (−328 to +752 °F), DSC sensor Alloy C22

DSC sensor [3]
Special version for very high fluid temperatures (on request):
- −200 to +450 °C (−328 to +842 °F)
- −200 to +440 °C (−328 to +824 °F), Ex version
-

Seals
- −200 to +400 °C (−328 to +752 °F) for graphite (standard)
- −15 to +175 °C (+5 to +347 °F) for Viton
- −20 to +275 °C (−4 to +527 °F) for Kalrez
- −200 to +260 °C (−328 to +500 °F) for Gylon

Pressure-temperature ratings

An overview of the pressure-temperature ratings for the process connections is provided in the "Technical Information" document

Pressure loss

For a precise calculation, use the Applicator(→ 131).

16.10 Mechanical construction

Design, dimensions

For the dimensions and installation lengths of the device, see the "Technical Information" document, "Mechanical construction" section

Weight

Compact version

Weight data:
- Including the transmitter:
  – Order code for *"Housing"*, option C: 1.8 kg (4.0 lb)
  – Order code for *"Housing"*, option B: 4.5 kg (9.9 lb)
- Excluding packaging material

3) Capacitance sensor

Weight in SI units

DN [mm]	Weight [kg]	
	Order code for "Housing", option C Aluminum, AlSi10Mg, coated [1]	Order code for "Housing", option B Stainless steel, 1.4404 (316L) [1]
15	3.1	5.8
25	3.3	6.0
40	3.9	6.6
50	4.2	6.9
80	5.6	8.3
100	6.6	9.3
150	9.1	11.8

1) For high-temperature/low-temperature version: values + 0.2 kg

Weight in US units

DN [in]	Weight [lbs]	
	Order code for "Housing", option C Aluminum, AlSi10Mg, coated [1]	Order code for "Housing", option B Stainless steel, 1.4404 (316L) [1]
½	6.9	12.9
1	7.4	13.3
1½	8.7	14.6
2	9.4	15.3
3	12.4	18.4
4	14.6	20.6
6	20.2	26.1

1) For high-temperature/low-temperature version: values +0.4 lbs

Transmitter remote version

Wall-mount housing

Depends on the material of the wall-mount housing:
- Aluminum, AlSi10Mg, coated: 2.4 kg (5.2 lb)
- Stainless steel, 1.4404 (316L): 6.0 kg (13.2 lb)

Sensor remote version

Weight data:
- Including the connection housing:
  - Aluminum, AlSi10Mg, coated: 0.8 kg (1.8 lb)
  - Stainless cast steel, 1.4408 (CF3M): 2.0 kg (4.4 lb)
- Excluding the connecting cable
- Excluding packaging material

Weight in SI units

DN [mm]	Weight [kg]	
	Connection housing Aluminum, AlSi10Mg, coated [1]	Connection housing Stainless cast steel, 1.4408 (CF3M) [1]
15	2.1	3.3
25	2.3	3.5
40	2.9	4.1
50	3.2	4.4
80	4.6	5.8
100	5.6	6.8
150	8.1	9.3

1) For high-temperature/low-temperature version: values + 0.2 kg

Weight in US units

DN [in]	Weight [lbs]	
	Connection housing Aluminum, AlSi10Mg, coated [1]	Connection housing Stainless cast steel, 1.4408 (CF3M) [1]
½	4.5	7.3
1	5.0	7.8
1½	6.3	9.1
2	7.0	9.7
3	10.0	12.8
4	12.3	15.0
6	17.3	20.5

1) For high-temperature/low-temperature version: values +0.4 lbs

Accessories

Flow conditioner

Weight in SI units

DN [1] [mm]	Pressure rating	Weight [kg]
15	PN 10 to 40	0.04
25	PN 10 to 40	0.1
40	PN 10 to 40	0.3
50	PN 10 to 40	0.5
80	PN 10 to 40	1.4
100	PN 10 to 40	2.4
150	PN 10/16 PN 25/40	6.3 7.8

1) EN (DIN)

DN [1] [mm]	Pressure rating	Weight [kg]
15	Class 150 Class 300	0.03 0.04
25	Class 150 Class 300	0.1
40	Class 150 Class 300	0.3
50	Class 150 Class 300	0.5
80	Class 150 Class 300	1.2 1.4
100	Class 150 Class 300	2.7
150	Class 150 Class 300	6.3 7.8

1) ASME

DN [1] [mm]	Pressure rating	Weight [kg]
15	20K	0.06
25	20K	0.1
40	20K	0.3
50	10K 20K	0.5
80	10K 20K	1.1
100	10K 20K	1.80
150	10K 20K	4.5 5.5

1) JIS

Weight in US units

DN [1] [in]	Pressure rating	Weight [lbs]
½	Class 150 Class 300	0.07 0.09
1	Class 150 Class 300	0.3
1½	Class 150 Class 300	0.7
2	Class 150 Class 300	1.1
3	Class 150 Class 300	2.6 3.1

DN [1] [in]	Pressure rating	Weight [lbs]
4	Class 150 Class 300	6.0
6	Class 150 Class 300	14.0 16.0

1) ASME

Materials

Transmitter housing

Compact version

- Order code for "Housing", option **C** "Compact, aluminum coated":
  Aluminum, AlSi10Mg, coated
- Order code for "Housing", option **B** "Compact, stainless":
  For maximum corrosion resistance: stainless steel 1.4404 (316L)

Remote version

- Order code for "Housing", option **J** "Remote, aluminum coated":
  Aluminum, AlSi10Mg, coated
- Order code for "Housing", option **K** "Remote, stainless":
  For maximum corrosion resistance: stainless steel 1.4404 (316L)

Cable entries/cable glands

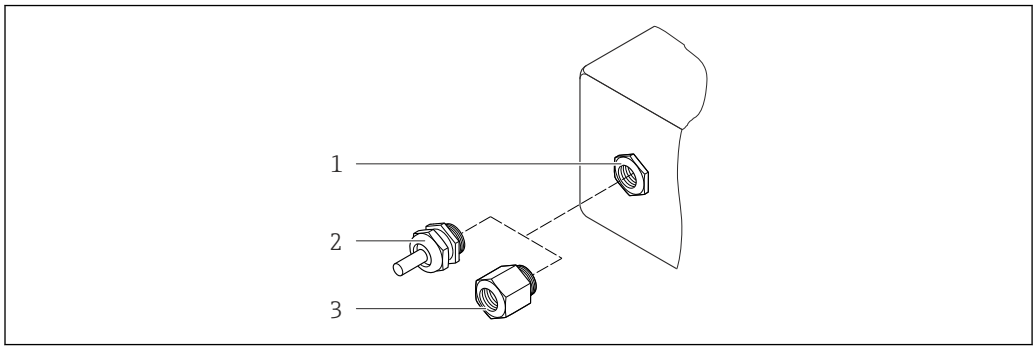

32 Possible cable entries/cable glands

1 Cable entry in transmitter housing, wall-mount housing or connection housing with internal thread M20 x 1.5
2 Cable gland M20 x 1.5
3 Adapter for cable entry with internal thread G ½" or NPT ½"

Order code for "Housing", option B "Compact, stainless", option K "Remote, stainless"

Cable entry/cable gland	Type of protection	Material
Cable gland M20 × 1.5	▪ Non-Ex ▪ Ex ia ▪ Ex ic ▪ Ex nA ▪ Ex tb	Stainless steel ,1.4404
Adapter for cable entry with internal thread G ½"	For non-Ex and Ex (except for CSA Ex d/XP)	Stainless steel, 1.4404 (316L)
Adapter for cable entry with internal thread NPT ½"	For non-Ex and Ex	

Order code for "Housing": option C "Compact, aluminum coated", option J "Remote, aluminum coated"

Cable entry/cable gland	Type of protection	Material
Cable gland M20 × 1.5	▪ Non-Ex ▪ Ex ia ▪ Ex ic	Plastic
	Adapter for cable entry with internal thread G ½"	Nickel-plated brass
Adapter for cable entry with internal thread NPT ½"	For non-Ex and Ex (except for CSA Ex d/XP)	Nickel-plated brass
Thread NPT ½" via adapter	For non-Ex and Ex	

Connecting cable for remote version

- Standard cable: PVC cable with copper shield
- Reinforced cable: PVC cable with copper shield and additional steel wire braided jacket

Sensor connection housing

- Coated aluminum AlSi10Mg
- Stainless cast steel, 1.4408 (CF3M), in compliance with NACE MR0175-2003 and MR0103-2003

Measuring tubes

Pressure ratings up to PN 40, Class 150/300, and JIS 10K/20K:
Stainless cast steel, 1.4408 (CF3M), in compliance with AD2000 (for AD2000 the temperature range is limited to −10 to +400 °C (+14 to +752 °F)) and in compliance with NACE MR0175-2003 and MR0103-2003

DSC sensor

Pressure ratings up to PN 40, Class 150/300, and JIS 10K/20K:

Parts in contact with medium (marked as "wet" on the DSC sensor flange):
Stainless steel, 1.4435 (316, 316L), in compliance with NACE MR0175-2003 and MR0103-2003

Parts not in contact with medium:
- Stainless steel 1.4301 (304)
- Order code for *"Sensor option"*, option CD *"Harsh environment, DSC sensor, sensor components Alloy C22"*:
  Alloy C22 sensor: UNS N06022 similar to Alloy C22/2.4602, in compliance with NACE MR0175-2003 and MR0103-2003

Seals

- Graphite (standard)
  Pressure rating PN 10 to 40, Class 150 to 300, JIS 10 to 20K: Sigraflex Foil Z (BAM-certified for oxygen applications)
- FPM (Viton)
- Kalrez 6375
- Gylon 3504 (BAM-certified for oxygen applications, "high quality in terms of TA Luft (German Clean Air Act"))

Housing support

Stainless steel, 1.4408 (CF3M)

Accessories

Weather protection cover

Stainless steel 1.4404 (316L)

Flow conditioner

Stainless steel, multiple certifications, 1.4404 (316, 316L), in compliance with NACE MR0175-2003 and MR0103-2003

16.11 Operability

Local operation

Via display module

Order code for "Display; Operation", option **C** "SD02"	Order code for "Display; Operation", option **E** "SD03"
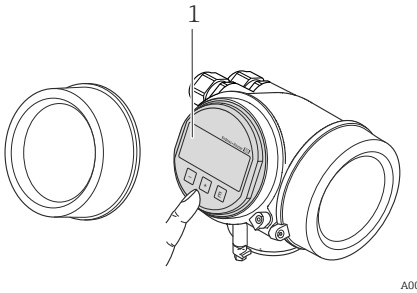	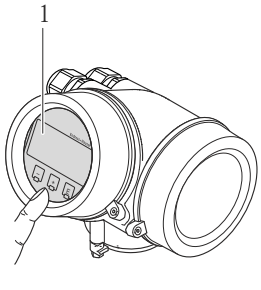
1 Operation with pushbuttons	*1 Operation with touch control*

Display elements
- 4-line display
- With order code for "Display; operation", option **E**:
  White background lighting; switches to red in event of device errors
- Format for displaying measured variables and status variables can be individually configured
- Permitted ambient temperature for the display: –20 to +60 °C (–4 to +140 °F)
  The readability of the display may be impaired at temperatures outside the temperature range.

Operating elements
- With order code for "Display; operation", option **C**:
  Local operation with 3 push buttons: ⊕, ⊖, Ⓔ
- With order code for "Display; operation", option **E**:
  External operation via touch control; 3 optical keys: ⊕, ⊖, Ⓔ
- Operating elements also accessible in various hazardous areas

Additional functionality
- Data backup function
  The device configuration can be saved in the display module.
- Data comparison function
  The device configuration saved in the display module can be compared to the current device configuration.
- Data transfer function
  The transmitter configuration can be transmitted to another device using the display module.

Via remote display and operating module FHX50

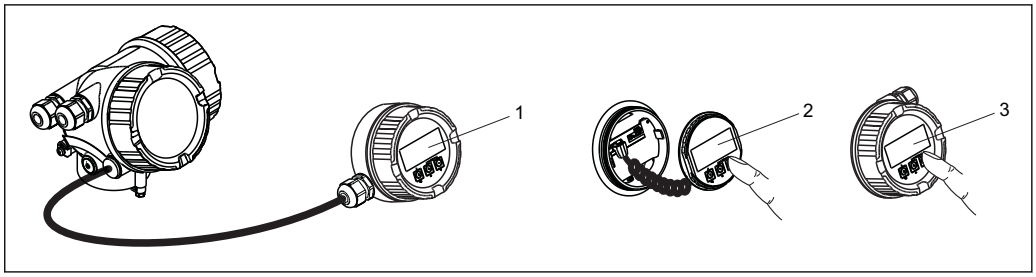

33 *Operating options via FHX50*

1 *Housing of remote display and operating module FHX50*
2 *SD02 display and operating module, push buttons: cover must be opened for operation*
3 *SD03 display and operating module, optical buttons: operation possible through cover glass*

Remote operation

Via FOUNDATION Fieldbus network

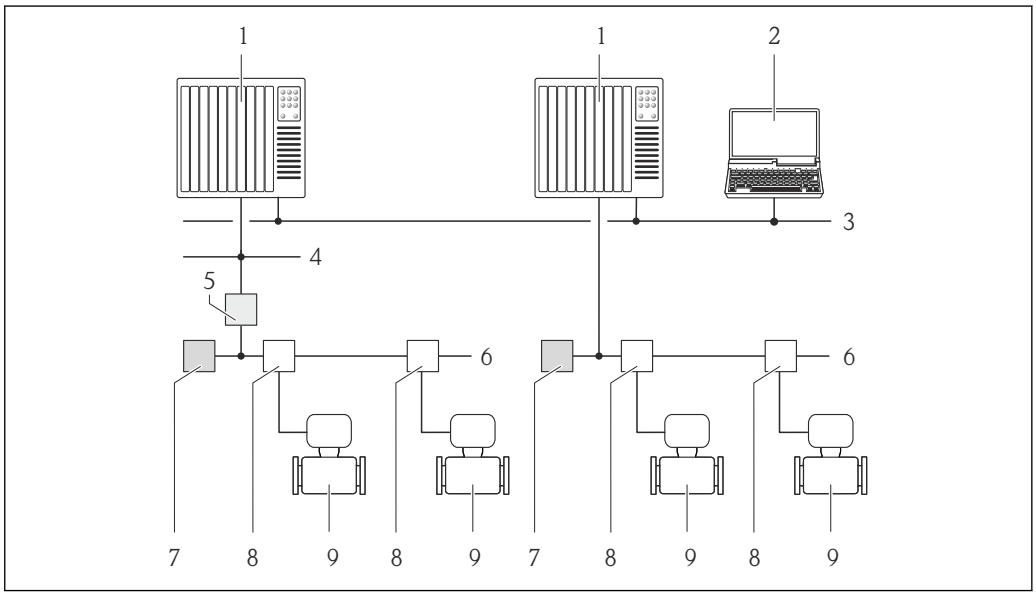

1 *Automation system*
2 *Computer with FOUNDATION Fieldbus network card*
3 *Industry network*
4 *High Speed Ethernet FF-HSE network*
5 *Segment coupler FF-HSE/FF-H1*
6 *FOUNDATION Fieldbus FF-H1 network*
7 *Power supply FF-H1 network*
8 *T-box*
9 *Measuring device*

Service interface

Service interface (CDI)

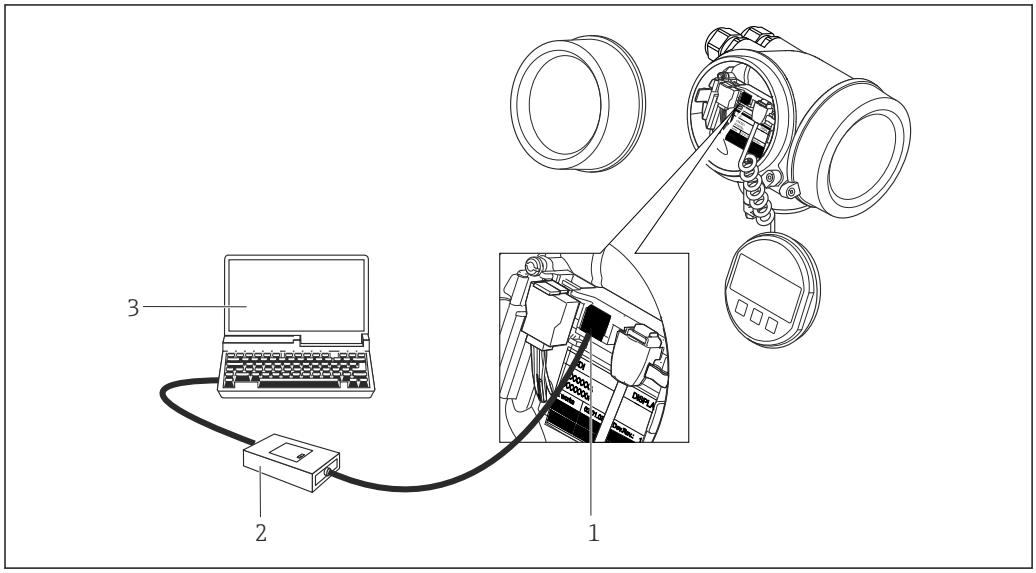

1 Service interface (CDI = Endress+Hauser Common Data Interface) of the measuring device
2 Commubox FXA291
3 Computer with "FieldCare" operating tool with COM DTM "CDI Communication FXA291"

Languages

Can be operated in the following languages:
- Via local display:
  English, German, French, Spanish, Italian, Dutch, Portuguese, Polish, Russian, Swedish, Turkish, Chinese, Japanese, Korean, Bahasa (Indonesian), Vietnamese, Czech
- Via "FieldCare" operating tool:
  English, German, French, Spanish, Italian, Chinese, Japanese

16.12 Certificates and approvals

CE mark

The measuring system is in conformity with the statutory requirements of the applicable EC Directives. These are listed in the corresponding EC Declaration of Conformity along with the standards applied.

Endress+Hauser confirms successful testing of the device by affixing to it the CE mark.

C-Tick symbol

The measuring system meets the EMC requirements of the "Australian Communications and Media Authority (ACMA)".

Ex approval

The devices are certified for use in hazardous areas and the relevant safety instructions are provided in the separate "Safety Instructions" (XA) document. Reference is made to this document on the nameplate.

FOUNDATION Fieldbus certification	**FOUNDATION Fieldbus interface** The measuring device is certified and registered by the Fieldbus FOUNDATION. The measuring system meets all the requirements of the following specifications: ▪ Certified in accordance with FOUNDATION Fieldbus H1 ▪ Interoperability Test Kit (ITK), revision version 6.1.1 (certificate available on request) ▪ Physical Layer Conformance Test ▪ The device can also be operated with certified devices of other manufacturers (interoperability)
Pressure Equipment Directive	▪ With the PED/G1/x (x = category) marking on the sensor nameplate, Endress+Hauser confirms compliance with the "Essential Safety Requirements" specified in Annex I of the Pressure Equipment Directive 97/23/EC. ▪ Devices not bearing this marking (PED) are designed and manufactured according to good engineering practice. They meet the requirements of Art.3 Section 3 of the Pressure Equipment Directive 97/23/EC. The range of application is indicated in tables 6 to 9 in Annex II of the Pressure Equipment Directive.
Other standards and guidelines	▪ EN 60529 Degrees of protection provided by enclosures (IP code) ▪ DIN ISO 13359 Measurement of conductive liquid flow in closed conduits - Flanged-type electromagnetic flowmeters - Overall length ▪ EN 61010-1 Safety requirements for electrical equipment for measurement, control and laboratory use ▪ IEC/EN 61326 Emission in accordance with Class A requirements. Electromagnetic compatibility (EMC requirements). ▪ NAMUR NE 21 Electromagnetic compatibility (EMC) of industrial process and laboratory control equipment ▪ NAMUR NE 32 Data retention in the event of a power failure in field and control instruments with microprocessors ▪ NAMUR NE 43 Standardization of the signal level for the breakdown information of digital transmitters with analog output signal. ▪ NAMUR NE 53 Software of field devices and signal-processing devices with digital electronics ▪ NAMUR NE 105 Specifications for integrating fieldbus devices in engineering tools for field devices ▪ NAMUR NE 107 Self-monitoring and diagnosis of field devices ▪ NAMUR NE 131 Requirements for field devices for standard applications ▪ ASME BPVC Section VIII, Division 1 Rules for Construction of Pressure Vessels

16.13 Application packages

Many different application packages are available to enhance the functionality of the device. Such packages might be needed to address safety aspects or specific application requirements.

The application packages can be ordered from Endress+Hauser either directly with the device or subsequently. Detailed information on the order code in question is available

from your local Endress+Hauser sales center or on the product page of the Endress+Hauser website: www.endress.com.

Detailed information on the application packages:
Special Documentation on the device (→ 161)

16.14 Accessories

Overview of accessories available for order (→ 130)

16.15 Supplementary documentation

For an overview of the scope of the associated Technical Documentation, refer to the following:
- The CD-ROM provided for the device (depending on the device version, the CD-ROM might not be part of the delivery!)
- The *W@M Device Viewer* : Enter the serial number from the nameplate (www.endress.com/deviceviewer)
- The *Endress+Hauser Operations App*: Enter the serial number from the nameplate or scan the 2-D matrix code (QR code) on the nameplate.

Standard documentation

Brief Operating Instructions

Measuring device	Documentation code
Prowirl D 200	KA01135D

Technical Information

Measuring device	Documentation code
Prowirl D 200	TI01083D

Supplementary device-dependent documentation

Safety Instructions

Contents	Documentation code
ATEX/IECEx Ex d, Ex tb	XA01148D
ATEX/IECEx Ex ia, Ex tb	XA01151D
ATEX/IECEx Ex ic, Ex nA	XA01152D
$_{C}CSA_{US}$ XP	XA01153D
$_{C}CSA_{US}$ IS	XA01154D
NEPSI Ex d	XA01238D
NEPSI Ex i	XA01239D
NEPSI Ex ic, Ex nA	XA01240D
INMETRO Ex d	XA01250D
INMETRO Ex i	XA01042D
INMETRO Ex nA	XA01043D

Special Documentation

Contents	Documentation code
Information on the Pressure Equipment Directive	SD01163D
Heartbeat Technology	SD01204D
Natural gas	SD01194D
Air + Industrial Gases (Single Gas + Gas Mixtures)	SD01195D

Installation Instructions

Contents	Documentation code
Installation Instructions for spare part sets	Overview of accessories available for order (→ 130)

17 Appendix

The manufacturer-specific device parameters are listed in the index tables.

FOUNDATION Fieldbus parameters:
"Guideline - FOUNDATION Fieldbus Function Blocks" document (BA062S), available via www.endress.com

17.1 Endress+Hauser FOUNDATION Fieldbus Parameter

17.1.1 Resource Block 2

Relative Index	Name	Label	Data type	Storage Class	Size (Bytes)	MODE_BLK	Writability
11	RB2_DevType	Device Type	ENUM16	Static	2		
12	RB2_DevRev	Device Revision	UINT8	Static	1		
13	RB2_DdRev	DD Revision	UINT8	Static	1		
14	RB2_GrantDeny	Grant Deny	Standard	Static	2		X
	RB2_GrantDeny_Grant	Grant	BIT_ENUM8	Static	1	AUTO	X
	RB2_GrantDeny_Deny	Deny	BIT_ENUM8	Static	1	AUTO	X
15	RB2_HardTypes	Hard Types	BIT_ENUM16	Static	2		
16	RB2_Restart	Restart	ENUM8	Dynamic	1	AUTO	X
17	RB2_Features	Features	BIT_ENUM16	Static	2		
18	RB2_FeatureSel	Feature Selection	BIT_ENUM16	Static	2	AUTO	X
19	RB2_CycleType	Cycle Type	BIT_ENUM16	Static	2		
20	RB2_CycleSel	Cycle Selection	BIT_ENUM16	Static	2	AUTO	X
21	RB2_MinCycleT	Minumum Cycle Time	UINT32	Static	4		
22	RB2_MemorySize	Memory Size	UINT16	Static	2		
23	RB2_NvCycleT	Nonvolatile Cycle Time	UINT32	Static	4		
24	RB2_FreeSpace	Free Space	FLOAT	Dynamic	4		
25	RB2_FreeTime	Free Time	FLOAT	Dynamic	4		
26	RB2_ShedRcas	Shed Remote Cascade	UINT32	Static	4	AUTO	X
27	RB2_ShedRout	Shed Remote Out	UINT32	Static	4	AUTO	X
28	RB2_FaultState	Fault State	ENUM8	Dynamic	1		
29	RB2_SetFstate	Set Fault State	ENUM8	Dynamic	1	AUTO	X
30	RB2_ClrFstate	Clear Fault State	ENUM8	Dynamic	1	AUTO	X
31	RB2_MaxNotify	Max Notify	UINT8	Static	1		
32	RB2_LimNotify	Limit Notify	UINT8	Static	1	AUTO	X
33	RB2_ConfirmTime	Confirm Time	UINT32	Static	4	AUTO	X
34	RB2_WriteLock	Write Lock	ENUM8	Static	1	AUTO	
35	RB2_UpdateEvt	Update Event	Standard	Dynamic	14		
	RB2_UpdateEvt_Unacknowledged	Unacknowledged	ENUM8	Dynamic	1	AUTO	X
	RB2_UpdateEvt_UpdateState	Update State	ENUM8	Dynamic	1		
	RB2_UpdateEvt_TimeStamp	Time Stamp	TimeValue	Dynamic	8		
	RB2_UpdateEvt_StaticRevision	Static revision	UINT16	Dynamic	2		
	RB2_UpdateEvt_RelativeIndex	Relative Index	UINT16	Dynamic	2		

Relative Index	Name	Label	Data type	Storage Class	Size (Bytes)	MODE_BLK	Writability
36	RB2_BlockAlm	Block Alarm	Standard	Dynamic	13		
	RB2_BlockAlm_Unacknowledged	Unacknowledged	ENUM8	Dynamic	1	AUTO	X
	RB2_BlockAlm_AlarmState	Alarm State	ENUM8	Dynamic	1		
	RB2_BlockAlm_TimeStamp	Time Stamp	TimeValue	Dynamic	8		
	RB2_BlockAlm_SubCode	Subcode	ENUM16	Dynamic	2		
	RB2_BlockAlm_Value	Value	UINT8	Dynamic	1		
37	RB2_AlarmSum	Alarm Summary	Standard	Static	8		
	RB2_AlarmSum_Current	Current	BIT_ENUM16	Static	2		
	RB2_AlarmSum_Unacknowledged	Unacknowledged	BIT_ENUM16	Static	2		
	RB2_AlarmSum_Unreported	Unreported	BIT_ENUM16	Static	2		
	RB2_AlarmSum_Disabled	Disabled	BIT_ENUM16	Static	2	AUTO	X
38	RB2_AckOption	Acknowledge Option	BIT_ENUM16	Static	2	AUTO	X
39	RB2_WritePri	Write Priority	UINT8	Static	1	AUTO	X
40	RB2_WriteAlm	Write Alarm	Standard	Dynamic	13		
	RB2_WriteAlm_Unacknowledged	Unacknowledged	ENUM8	Dynamic	1	AUTO	X
	RB2_WriteAlm_AlarmState	Alarm State	ENUM8	Dynamic	1		
	RB2_WriteAlm_TimeStamp	Time Stamp	TimeValue	Dynamic	8		
	RB2_WriteAlm_SubCode	Subcode	ENUM16	Dynamic	2		
	RB2_WriteAlm_Value	Discrete Value	ENUM8	Dynamic	1		
41	RB2_ItkVer	ITK Version	UINT16	Static	2		
42	RB2_CapabilityLev		UINT8	Static	1		
43	RB2_CompatibilityRev		UINT8	Static	1		
44	RB2_EnpVersion	ENP version	STRING	Static	32		
45	RB2_EnpDeviceTag	Device tag	STRING	Static	32	AUTO	X
46	RB2_SerialNumber	Serial number	STRING	Static	16		
47	RB2_OrderCodeExt	Extended order code 1	STRING	Static	32	AUTO	X
48	RB2_OrderCodeExtPart2	Extended order code 2	STRING	Static	32	AUTO	X
49	RB2_OrderCode	Order code	STRING	Static	32	AUTO	X
50	RB2_FirmwareVersion	Firmware version	STRING	Static	32		
51	RB2_AccessCode	Enter access code	UINT16	Static	2	AUTO	X
52	RB2_AccessLevel	Access status tooling	ENUM16	Static	2		
53	RB2_UdlFeature	UDL features	BIT_ENUM16	Static	2		
54	RB2_UdlOpCode	UDL operation	ENUM16	Dynamic	2	AUTO	
55	RB2_UdlStatus	UDL status	ENUM16	Static	2		
56	RB2_UdlVeriDelay	UDL verify delay	UINT16	Static	2		
57	RB2_UdlRevision		UINT16	Static	2		
58	RB2_UdlHeader		BYTEARRAY	Dynamic	96	AUTO	
59	RB2_UdlConfig		BYTEARRAY	Dynamic	118	AUTO	
60	RB2_UdlData		BYTEARRAY	Dynamic	118	AUTO	
61	RB2_FdVer	Revision	UINT16	Static	2		
62	RB2_FdFailActive	Fail Active	BIT_ENUM32	Dynamic	4		
63	RB2_FdOffspecActive	Offspec Active	BIT_ENUM32	Dynamic	4		

Relative Index	Name	Label	Data type	Storage Class	Size (Bytes)	MODE_BLK	Writability
64	RB2_FdMaintActive	Maintenance Active	BIT_ENUM32	Dynamic	4		
65	RB2_FdCheckActive	Check Active	BIT_ENUM32	Dynamic	4		
66	RB2_FdFailMap	Fail Map	BIT_ENUM32	Static	4	AUTO	X
67	RB2_FdOffspecMap	Offspec Map	BIT_ENUM32	Static	4	AUTO	X
68	RB2_FdMaintMap	Maintenance Map	BIT_ENUM32	Static	4	AUTO	X
69	RB2_FdCheckMap	Check Map	BIT_ENUM32	Static	4	AUTO	
70	RB2_FdFailMask	Fail Mask	BIT_ENUM32	Static	4	AUTO	X
71	RB2_FdOffspecMask	Offspec Mask	BIT_ENUM32	Static	4	AUTO	X
72	RB2_FdMaintMask	Maintenance Mask	BIT_ENUM32	Static	4	AUTO	X
73	RB2_FdCheckMask	Check Mask	BIT_ENUM32	Static	4	AUTO	X
74	RB2_FdFailAlm	Fail Diagnostic Alarm	Standard	Dynamic	15		
	RB2_FdFailAlm_Unacknowledged	Unacknowledged	ENUM8	Dynamic	1	AUTO	X
	RB2_FdFailAlm_AlarmState	Alarm State	ENUM8	Dynamic	1		
	RB2_FdFailAlm_TimeStamp	Time Stamp	TimeValue	Dynamic	8		
	RB2_FdFailAlm_SubCode	Subcode	UINT32	Dynamic	4		
	RB2_FdFailAlm_Value	Value	UINT8	Dynamic	1		
75	RB2_FdOffspecAlm	Offspec Alarm	Standard	Dynamic	15		
	RB2_FdOffspecAlm_Unacknowledged	Unacknowledged	ENUM8	Dynamic	1	AUTO	X
	RB2_FdOffspecAlm_AlarmState	Alarm State	ENUM8	Dynamic	1		
	RB2_FdOffspecAlm_TimeStamp	Time Stamp	TimeValue	Dynamic	8		
	RB2_FdOffspecAlm_SubCode	Subcode	UINT32	Dynamic	4		
	RB2_FdOffspecAlm_Value	Value	UINT8	Dynamic	1		
76	RB2_FdMaintAlm	Maintenance Alarm	Standard	Dynamic	15		
	RB2_FdMaintAlm_Unacknowledged	Unacknowledged	ENUM8	Dynamic	1	AUTO	X
	RB2_FdMaintAlm_AlarmState	Alarm State	ENUM8	Dynamic	1		
	RB2_FdMaintAlm_TimeStamp	Time Stamp	TimeValue	Dynamic	8		
	RB2_FdMaintAlm_SubCode	Subcode	UINT32	Dynamic	4		
	RB2_FdMaintAlm_Value	Value	UINT8	Dynamic	1		
77	RB2_FdCheckAlm	Check Alarm	Standard	Dynamic	15		
	RB2_FdCheckAlm_Unacknowledged	Unacknowledged	ENUM8	Dynamic	1	AUTO	X
	RB2_FdCheckAlm_AlarmState	Alarm State	ENUM8	Dynamic	1		
	RB2_FdCheckAlm_TimeStamp	Time Stamp	TimeValue	Dynamic	8		
	RB2_FdCheckAlm_SubCode	Subcode	UINT32	Dynamic	4		
	RB2_FdCheckAlm_Value	Value	UINT8	Dynamic	1		
78	RB2_FdFailPri	Fail Priority	UINT8	Static	1	AUTO	X
79	RB2_FdOffspecPri	Offspec Priority	UINT8	Static	1	AUTO	X
80	RB2_FdMaintPri	Maintenance Priority	UINT8	Static	1	AUTO	X
81	RB2_FdCheckPri	Check Priority	UINT8	Static	1	AUTO	X
82	RB2_FdSimulate	Field Diagnostic Simulate	Standard	Dynamic	9		
	RB2_FdSimulate_DiagnosSimulateValue	Diagnostic Simulate Value	BIT_ENUM32	Dynamic	4	AUTO	X
	RB2_FdSimulate_DiagnosticValue	Diagnostic Value	BIT_ENUM32	Dynamic	4		

Relative Index	Name	Label	Data type	Storage Class	Size (Bytes)	MODE_BLK	Writability
	RB2_FdSimulate_EnableDisable	Simulate En/Disable	ENUM8	Dynamic	1	AUTO	X
83	RB2_FdRecommenAct	Recommended Action	ENUM16	Dynamic	2		
84	RB2_HardwareVersion	Hardware revision	STRING	Static	16		
85	RB2_FfCommVersion		STRING	Static	16		
86	RB2_RestartEnable	Restart enable	BIT_ENUM16	Static	2	AUTO	
87	RB2_BlockErrDesc_1	Block error description	BIT_ENUM32	Dynamic	4		
88	RB2_ResDir	Resource Directory	UINT16	Static	2		
	RB2_View1	Resource 2 View 1	VIEW1	Dynamic	76		
	RB2_StRev	Static Revision	UINT16	Static	2		
	RB2_BlockErr	Block Error	BIT_ENUM16	Dynamic	2		
	RB2_RsState	Resource State	ENUM8	Dynamic	1		
	RB2_FreeTime	Free Time	FLOAT	Dynamic	4		
	RB2_FaultState	Fault State	ENUM8	Dynamic	1		
	RB2_EnpDeviceTag	Device tag	STRING	Static	32	AUTO	X
	RB2_FdFailActive	Fail Active	BIT_ENUM32	Dynamic	4		
	RB2_FdOffspecActive	Offspec Active	BIT_ENUM32	Dynamic	4		
	RB2_FdMaintActive	Maintenance Active	BIT_ENUM32	Dynamic	4		
	RB2_FdCheckActive	Check Active	BIT_ENUM32	Dynamic	4		
	RB2_FdRecommenAct	Recommended Action	ENUM16	Dynamic	2		
	RB2_BlockErrDesc_1	Block error description	BIT_ENUM32	Dynamic	4		
	RB2_View2	Resource 2 View 2	VIEW2	Dynamic	30		
	RB2_StRev	Static Revision	UINT16	Static	2		
	RB2_FeatureSel	Feature Selection	BIT_ENUM16	Static	2	AUTO	X
	RB2_CycleSel	Cycle Selection	BIT_ENUM16	Static	2	AUTO	X
	RB2_NvCycleT	Nonvolatile Cycle Time	UINT32	Static	4		
	RB2_FreeSpace	Free Space	FLOAT	Dynamic	4		
	RB2_ShedRcas	Shed Remote Cascade	UINT32	Static	4	AUTO	X
	RB2_ShedRout	Shed Remote Out	UINT32	Static	4	AUTO	X
	RB2_LimNotify	Limit Notify	UINT8	Static	1	AUTO	X
	RB2_ConfirmTime	Confirm Time	UINT32	Static	4	AUTO	X
	RB2_WriteLock	Write Lock	ENUM8	Static	1	AUTO	
	RB2_View3	Resource 2 View 3	VIEW3	Dynamic	85		
	RB2_StRev	Static Revision	UINT16	Static	2		
	RB2_BlockErr	Block Error	BIT_ENUM16	Dynamic	2		
	RB2_RsState	Resource State	ENUM8	Dynamic	1		
	RB2_FreeTime	Free Time	FLOAT	Dynamic	4		
	RB2_FaultState	Fault State	ENUM8	Dynamic	1		
	RB2_EnpDeviceTag	Device tag	STRING	Static	32	AUTO	X
	RB2_FdFailActive	Fail Active	BIT_ENUM32	Dynamic	4		
	RB2_FdOffspecActive	Offspec Active	BIT_ENUM32	Dynamic	4		
	RB2_FdMaintActive	Maintenance Active	BIT_ENUM32	Dynamic	4		
	RB2_FdCheckActive	Check Active	BIT_ENUM32	Dynamic	4		

Relative Index	Name	Label	Data type	Storage Class	Size (Bytes)	MODE_BLK	Writability
	RB2_FdRecommenAct	Recommended Action	ENUM16	Dynamic	2		
	RB2_BlockErrDesc_1	Block error description	BIT_ENUM32	Dynamic	4		
	RB2_View4	Resource 2 View 4	VIEW4	Static	103		
	RB2_StRev	Static Revision	UINT16	Static	2		
	RB2_Strategy	Strategy	UINT16	Static	2	AUTO	X
	RB2_AlertKey	Alert Key	UINT8	Static	1	AUTO	X
	RB2_ManufacId	Manufacturer Id	ENUM32	Static	4		
	RB2_DevType	Device Type	ENUM16	Static	2		
	RB2_DevRev	Device Revision	UINT8	Static	1		
	RB2_DdRev	DD Revision	UINT8	Static	1		
	RB2_HardTypes	Hard Types	BIT_ENUM16	Static	2		
	RB2_Features	Features	BIT_ENUM16	Static	2		
	RB2_CycleType	Cycle Type	BIT_ENUM16	Static	2		
	RB2_MinCycleT	Minumum Cycle Time	UINT32	Static	4		
	RB2_MemorySize	Memory Size	UINT16	Static	2		
	RB2_MaxNotify	Max Notify	UINT8	Static	1		
	RB2_AckOption	Acknowledge Option	BIT_ENUM16	Static	2	AUTO	X
	RB2_WritePri	Write Priority	UINT8	Static	1	AUTO	X
	RB2_ItkVer	ITK Version	UINT16	Static	2		
	RB2_CapabilityLev		UINT8	Static	1		
	RB2_CompatibilityRev		UINT8	Static	1		
	RB2_FdVer	Revision	UINT16	Static	2		
	RB2_FdFailMap	Fail Map	BIT_ENUM32	Static	4	AUTO	X
	RB2_FdOffspecMap	Offspec Map	BIT_ENUM32	Static	4	AUTO	X
	RB2_FdMaintMap	Maintenance Map	BIT_ENUM32	Static	4	AUTO	X
	RB2_FdCheckMap	Check Map	BIT_ENUM32	Static	4	AUTO	
	RB2_FdFailMask	Fail Mask	BIT_ENUM32	Static	4	AUTO	X
	RB2_FdOffspecMask	Offspec Mask	BIT_ENUM32	Static	4	AUTO	X
	RB2_FdMaintMask	Maintenance Mask	BIT_ENUM32	Static	4	AUTO	X
	RB2_FdCheckMask	Check Mask	BIT_ENUM32	Static	4	AUTO	X
	RB2_FdFailPri	Fail Priority	UINT8	Static	1	AUTO	X
	RB2_FdOffspecPri	Offspec Priority	UINT8	Static	1	AUTO	X
	RB2_FdMaintPri	Maintenance Priority	UINT8	Static	1	AUTO	X
	RB2_FdCheckPri	Check Priority	UINT8	Static	1	AUTO	X
	RB2_HardwareVersion	Hardware revision	STRING	Static	16		
	RB2_FfCommVersion		STRING	Static	16		

17.1.2 Transducer Block Advanced Setup

Relative Index	Name	Label	Data type	Storage Class	Size (Bytes)	MODE_BLK	Writability
11	TRDASUP_TransducerTypeVer		UINT16	Static	2		
12	TRDASUP_XdError	Transducer Error	ENUM8	Dynamic	1		
13	TRDASUP_CollectionDirectory	Collection Directory	UINT32	Static	4		
14	TRDASUP_BlockErrDesc_1	Block error description	BIT_ENUM32	Dynamic	4		
15	TRDASUP_STD_UserLevel_1	Access status tooling	ENUM16	Static	2		
16	TRDASUP_STD_LockingState_1	Locking status	BIT_ENUM16	Dynamic	2		
17	TRDASUP_STD_SWOptionActiveOverview_1	Software option overview	BIT_ENUM32	Static	4		
18	TRDASUP_VTX_AmbientPressure_1	Atmospheric pressure	FLOAT	Static	4	AUTO	X
19	TRDASUP_VTX_CalorificValueType_1	Calorific value type	ENUM16	Static	2	AUTO	X
20	TRDASUP_VTX_DeltaHeatCalculation_1	Delta heat calculation	ENUM16	Static	2	AUTO	X
21	TRDASUP_VTX_EnthalpyType_1	Enthalpy type	ENUM16	Static	2	AUTO	X
22	TRDASUP_VTX_ExpansionCoeff_1	Linear expansion coefficient	FLOAT	Static	4	AUTO	X
23	TRDASUP_VTX_ExternalInputSelector_1	External value	ENUM16	Static	2	AUTO	X
24	TRDASUP_VTX_Fix2ndFluidTemperature_1	2nd temperature delta heat	FLOAT	Static	4	AUTO	X
25	TRDASUP_VTX_FixCalorificValue_1	Calorific value	FLOAT	Static	4	AUTO	X
26	TRDASUP_VTX_FixDensity_1	Fixed density	FLOAT	Static	4	AUTO	X
27	TRDASUP_VTX_FixFluidTemperature_1	Fixed temperature	FLOAT	Static	4	AUTO	X
28	TRDASUP_VTX_FixPressure_1	Fixed process pressure	FLOAT	Static	4	AUTO	X
29	TRDASUP_VTX_FixSteamQuality_1	Steam quality value	FLOAT	Static	4	AUTO	X
30	TRDASUP_VTX_FixViscosityGas_1	Dynamic viscosity	FLOAT	Static	4	AUTO	X
31	TRDASUP_SU_DynamicViscosity_1	Dynamic viscosity unit	ENUM16	Static	2	AUTO	X
32	TRDASUP_VTX_FixViscosityLiquid_1	Dynamic viscosity	FLOAT	Static	4	AUTO	X
33	TRDASUP_VTX_FixZFactor_1	Z-factor	FLOAT	Static	4	AUTO	X
34	TRDASUP_VTX_GasMixture_1	Gas mixture	BIT_ENUM32	Static	4	AUTO	X
35	TRDASUP_VTX_InletConfig_1	Inlet configuration	ENUM16	Static	2	AUTO	X
36	TRDASUP_VTX_InletLength_1	Inlet run	FLOAT	Static	4	AUTO	X
37	TRDASUP_VTX_InstallationFactor_1	Installation factor	FLOAT	Static	4	AUTO	X

Relative Index	Name	Label	Data type	Storage Class	Size (Bytes)	MODE_BLK	Writability
38	TRDASUP_VTX_MatingPipeDiameter_1	Mating pipe diameter	FLOAT	Static	4	AUTO	X
39	TRDASUP_SU_Length_1	Length unit	ENUM16	Static	2	AUTO	X
40	TRDASUP_VTX_MolPercentAr_1	Mol% Ar	FLOAT	Static	4	AUTO	X
41	TRDASUP_VTX_MolPercentC2H3Cl_1	Mol% C2H3Cl	FLOAT	Static	4	AUTO	X
42	TRDASUP_VTX_MolPercentC2H4_1	Mol% C2H4	FLOAT	Static	4	AUTO	X
43	TRDASUP_VTX_MolPercentC2H6_1	Mol% C2H6	FLOAT	Static	4	AUTO	X
44	TRDASUP_VTX_MolPercentC3H8_1	Mol% C3H8	FLOAT	Static	4	AUTO	X
45	TRDASUP_VTX_MolPercentCH4_1	Mol% CH4	FLOAT	Static	4	AUTO	X
46	TRDASUP_VTX_MolPercentCl2_1	Mol% Cl2	FLOAT	Static	4	AUTO	X
47	TRDASUP_VTX_MolPercentCO_1	Mol% CO	FLOAT	Static	4	AUTO	X
48	TRDASUP_VTX_MolPercentCO2_1	Mol% CO2	FLOAT	Static	4	AUTO	X
49	TRDASUP_VTX_MolPercentH2_1	Mol% H2	FLOAT	Static	4	AUTO	X
50	TRDASUP_VTX_MolPercentH2O_1	Mol% H2O	FLOAT	Static	4	AUTO	X
51	TRDASUP_VTX_MolPercentH2S_1	Mol% H2S	FLOAT	Static	4	AUTO	X
52	TRDASUP_VTX_MolPercentHCl_1	Mol% HCl	FLOAT	Static	4	AUTO	X
53	TRDASUP_VTX_MolPercentHe_1	Mol% He	FLOAT	Static	4	AUTO	X
54	TRDASUP_VTX_MolPercentiC4H10_1	Mol% i-C4H10	FLOAT	Static	4	AUTO	X
55	TRDASUP_VTX_MolPercentiC5H12_1	Mol% i-C5H12	FLOAT	Static	4	AUTO	X
56	TRDASUP_VTX_MolPercentKr_1	Mol% Kr	FLOAT	Static	4	AUTO	X
57	TRDASUP_VTX_MolPercentN2_1	Mol% N2	FLOAT	Static	4	AUTO	X
58	TRDASUP_VTX_MolPercentnC10H22_1	Mol% n-C10H22	FLOAT	Static	4	AUTO	X
59	TRDASUP_VTX_MolPercentnC4H10_1	Mol% n-C4H10	FLOAT	Static	4	AUTO	X
60	TRDASUP_VTX_MolPercentnC5H12_1	Mol% n-C5H12	FLOAT	Static	4	AUTO	X
61	TRDASUP_VTX_MolPercentnC6H14_1	Mol% n-C6H14	FLOAT	Static	4	AUTO	X
62	TRDASUP_VTX_MolPercentnC7H16_1	Mol% n-C7H16	FLOAT	Static	4	AUTO	X
63	TRDASUP_VTX_MolPercentnC8H18_1	Mol% n-C8H18	FLOAT	Static	4	AUTO	X
64	TRDASUP_VTX_MolPercentnC9H20_1	Mol% n-C9H20	FLOAT	Static	4	AUTO	X
65	TRDASUP_VTX_MolPercentNe_1	Mol% Ne	FLOAT	Static	4	AUTO	X
66	TRDASUP_VTX_MolPercentNH3_1	Mol% NH3	FLOAT	Static	4	AUTO	X
67	TRDASUP_VTX_MolPercentO2_1	Mol% O2	FLOAT	Static	4	AUTO	X
68	TRDASUP_VTX_MolPercentOtherGas_1	Mol% other gas	FLOAT	Static	4	AUTO	X
69	TRDASUP_VTX_MolPercentSO2_1	Mol% SO2	FLOAT	Static	4	AUTO	X
70	TRDASUP_VTX_MolPercentXe_1	Mol% Xe	FLOAT	Static	4	AUTO	X
71	TRDASUP_VTX_ReferenceCombustionTemperature_1	Reference combustion temperature	FLOAT	Static	4	AUTO	X
72	TRDASUP_VTX_ReferenceDensity_1	Reference density	FLOAT	Static	4	AUTO	X
73	TRDASUP_VTX_ReferenceGrossCalorificValue_1	Reference gross calorific value	FLOAT	Static	4	AUTO	X
74	TRDASUP_VTX_ReferencePressure_1	Reference pressure	FLOAT	Static	4	AUTO	X

Relative Index	Name	Label	Data type	Storage Class	Size (Bytes)	MODE_BLK	Writability
75	TRDASUP_VTX_ReferenceTemperature_1	Reference temperature	FLOAT	Static	4	AUTO	X
76	TRDASUP_VTX_ReferenceZFactor_1	Reference Z-factor	FLOAT	Static	4	AUTO	X
77	TRDASUP_VTX_RelativeDensity_1	Relative density	FLOAT	Static	4	AUTO	X
78	TRDASUP_VTX_RelativeHumidity_1	Relative humidity	FLOAT	Static	4	AUTO	X
79	TRDASUP_VTX_SingleGasSelector_1	Gas type	ENUM16	Static	2	AUTO	X
80	TRDASUP_VTX_SpecificHeatCapacity_1	Specific heat capacity	FLOAT	Static	4	AUTO	X
81	TRDASUP_VTX_SteamQualitySelector_1	Steam quality	ENUM16	Static	2	AUTO	X
82	TRDASUP_PFS_OperatingMode_1	Operating mode	ENUM16	Static	2	AUTO	X
83	TRDASUP_PFS_PulseInputSelector_1	Assign pulse output	ENUM16	Static	2	AUTO	X
84	TRDASUP_PFS_PulseFailsafeMode_1	Failure mode	ENUM16	Static	2	AUTO	X
85	TRDASUP_PFS_PulseMeasuringMode_1	Measuring mode	ENUM16	Static	2	AUTO	X
86	TRDASUP_PFS_PulseWidth_1	Pulse width	FLOAT	Static	4	AUTO	X
87	TRDASUP_PFS_PulseValue_1	Value per pulse	FLOAT	Static	4	AUTO	X
88	TRDASUP_SU_Mass_1	Mass unit	ENUM16	Static	2	AUTO	X
89	TRDASUP_SU_Volume_1	Volume unit	ENUM16	Static	2	AUTO	X
90	TRDASUP_SU_CorrVolume_1	Corrected volume unit	ENUM16	Static	2	AUTO	X
91	TRDASUP_PFS_PulseOutValue_1	Pulse output	FLOAT	Dynamic	4		
92	TRDASUP_SU_Energy_1	Energy unit	ENUM16	Static	2	AUTO	X
93	TRDASUP_PFS_OverallSignalDamping_1	Response time	FLOAT	Static	4		
94	TRDASUP_PFS_StateValueSelector_1	Assign status	ENUM16	Static	2	AUTO	X
95	TRDASUP_PFS_StateMode_1	Switch output function	ENUM16	Static	2	AUTO	X
96	TRDASUP_PFS_LimitCheckSelector_1	Assign limit	ENUM16	Static	2	AUTO	X
97	TRDASUP_PFS_MessageSelector_1	Assign diagnostic behavior	ENUM16	Static	2	AUTO	X
98	TRDASUP_PFS_StateSwitchOnValue_1	Switch-on value	FLOAT	Static	4	AUTO	X
99	TRDASUP_PFS_StateSwitchOnDelay_1	Switch-on delay	FLOAT	Static	4	AUTO	X
100	TRDASUP_PFS_StateSwitchOffValue_1	Switch-off value	FLOAT	Static	4	AUTO	X
101	TRDASUP_PFS_StateSwitchOffDelay_1	Switch-off delay	FLOAT	Static	4	AUTO	X
102	TRDASUP_PFS_StateFailsafeMode_1	Failure mode	ENUM16	Static	2	AUTO	X
103	TRDASUP_PFS_DirectionCheckSelector_1	Assign flow direction check	ENUM16	Static	2	AUTO	X
104	TRDASUP_PFS_StateOutValue_1	Switch status	ENUM16	Dynamic	2		
105	TRDASUP_PFS_OutSignalInvert_1	Invert output signal	ENUM16	Static	2	AUTO	X
106	TRDASUP_PFS_FrequencyInputSelector_1	Assign frequency output	ENUM16	Static	2	AUTO	X
107	TRDASUP_PFS_FrequencyMeasuringMode_1	Measuring mode	ENUM16	Static	2	AUTO	X

Relative Index	Name	Label	Data type	Storage Class	Size (Bytes)	MODE_BLK	Writability
108	TRDASUP_PFS_FrequencyFailsafeMode_1	Failure mode	ENUM16	Static	2	AUTO	X
109	TRDASUP_PFS_FrequencyFailsafeValue_1	Failure frequency	FLOAT	Static	4	AUTO	X
110	TRDASUP_PFS_FrequencyDamping_1	Damping output	FLOAT	Static	4	AUTO	X
111	TRDASUP_PFS_FrequencyMinFrequency_1	Minimum frequency value	FLOAT	Static	4	AUTO	X
112	TRDASUP_PFS_FrequencyMaxFrequency_1	Maximum frequency value	FLOAT	Static	4	AUTO	X
113	TRDASUP_PFS_FrequencyMinValue_1	Measuring value at minimum frequency	FLOAT	Static	4	AUTO	X
114	TRDASUP_PFS_FrequencyMaxValue_1	Measuring value at maximum frequency	FLOAT	Static	4	AUTO	X
115	TRDASUP_SU_VolumeFlow_1	Volume flow unit	ENUM16	Static	2	AUTO	X
116	TRDASUP_SU_MassFlow_1	Mass flow unit	ENUM16	Static	2	AUTO	X
117	TRDASUP_SU_CorrVolumeFlow_1	Corrected volume flow unit	ENUM16	Static	2	AUTO	X
118	TRDASUP_SU_Velocity_1	Velocity unit	ENUM16	Static	2	AUTO	X
119	TRDASUP_SU_Pressure_1	Pressure unit	ENUM16	Static	2	AUTO	X
120	TRDASUP_SU_CalorificValueMass_1	Calorific value unit	ENUM16	Static	2	AUTO	X
121	TRDASUP_SU_CalorificValue_1	Calorific value unit	ENUM16	Static	2	AUTO	X
122	TRDASUP_SU_EnergyFlow_1	Energy flow unit	ENUM16	Static	2	AUTO	X
123	TRDASUP_SU_SpecificEnthalpy_1	Specific enthalpy unit	ENUM16	Static	2	AUTO	X
124	TRDASUP_SU_SpecificHeatCapacity_1	Specific heat capacity unit	ENUM16	Static	2	AUTO	X
125	TRDASUP_SU_Temperature_1	Temperature unit	ENUM16	Static	2	AUTO	X
126	TRDASUP_SU_Density_1	Density unit	ENUM16	Static	2	AUTO	X
127	TRDASUP_PFS_FrequencyOutValue_1	Output frequency	FLOAT	Dynamic	4		
128	TRDASUP_TIC_Channel_1	Assign process variable	ENUM16	Static	2	AUTO	X
129	TRDASUP_TIC_TotUnit_1	Unit totalizer	ENUM16	Static	2	AUTO	X
130	TRDASUP_TIC_Channel_2	Assign process variable	ENUM16	Static	2	AUTO	X
131	TRDASUP_TIC_TotUnit_2	Unit totalizer	ENUM16	Static	2	AUTO	X
132	TRDASUP_TIC_Channel_3	Assign process variable	ENUM16	Static	2	AUTO	X
133	TRDASUP_TIC_TotUnit_3	Unit totalizer	ENUM16	Static	2	AUTO	X
134	TRDASUP_VTX_FluidSelectorGas_1	Select gas type	ENUM16	Static	2	AUTO	X
135	TRDASUP_VTX_FluidSelectorLiquid_1	Select liquid type	ENUM16	Static	2	AUTO	X

Relative Index	Name	Label	Data type	Storage Class	Size (Bytes)	MODE_BLK	Writability
136	TRDASUP_VTX_FluidSelectorSteam_1	Select steam type	ENUM16	Static	2	AUTO	X
137	TRDASUP_VTX_MediumSelector_1	Select medium	ENUM16	Static	2	AUTO	X
138	TRDASUP_VTX_Package_1	Sensor version	ENUM16	Static	2	AUTO	X
139	TRDASUP_VTX_DensityCalcSelector_1	Density calculation	ENUM16	Static	2	AUTO	X
140	TRDASUP_VTX_EnthalpyCalcSelector_1	Enthalpy calculation	ENUM16	Static	2	AUTO	X
	TRDASUP_View1	View -1-	VIEW1	Dynamic	25		
	TRDASUP_StRev	Static Revision	UINT16	Static	2		
	TRDASUP_BlockErr	Block Error	BIT_ENUM16	Dynamic	2		
	TRDASUP_TransducerType	Transducer Type	ENUM16	Static	2		
	TRDASUP_XdError	Transducer Error	ENUM8	Dynamic	1		
	TRDASUP_BlockErrDesc_1	Block error description	BIT_ENUM32	Dynamic	4		
	STD_LockingState	Locking status	BIT_ENUM16	Dynamic	2		
	PFS_PulseOutValue	Pulse output	FLOAT	Dynamic	4		
	PFS_FrequencyOutValue	Output frequency	FLOAT	Dynamic	4		
	TRDASUP_View2	View -2-	VIEW2	Static	112		
	TRDASUP_StRev	Static Revision	UINT16	Static	2		
	TRDASUP_TransducerType	Transducer Type	ENUM16	Static	2		
	VTX_AmbientPressure	Atmospheric pressure	FLOAT	Static	4	AUTO	X
	VTX_CalorificValueType	Calorific value type	ENUM16	Static	2	AUTO	X
	VTX_DeltaHeatCalculation	Delta heat calculation	ENUM16	Static	2	AUTO	X
	VTX_EnthalpyType	Enthalpy type	ENUM16	Static	2	AUTO	X
	VTX_ExpansionCoeff	Linear expansion coefficient	FLOAT	Static	4	AUTO	X
	VTX_ExternalInputSelector	External value	ENUM16	Static	2	AUTO	X
	VTX_Fix2ndFluidTemperature	2nd temperature delta heat	FLOAT	Static	4	AUTO	X
	VTX_FixCalorificValue	Calorific value	FLOAT	Static	4	AUTO	X
	VTX_FixDensity	Fixed density	FLOAT	Static	4	AUTO	X
	VTX_FixFluidTemperature	Fixed temperature	FLOAT	Static	4	AUTO	X
	VTX_FixPressure	Fixed process pressure	FLOAT	Static	4	AUTO	X
	VTX_FixSteamQuality	Steam quality value	FLOAT	Static	4	AUTO	X
	VTX_FixViscosityGas	Dynamic viscosity	FLOAT	Static	4	AUTO	X

Relative Index	Name	Label	Data type	Storage Class	Size (Bytes)	MODE_BLK	Writability
	SU_DynamicViscosity	Dynamic viscosity unit	ENUM16	Static	2	AUTO	X
	VTX_FixViscosityLiquid	Dynamic viscosity	FLOAT	Static	4	AUTO	X
	VTX_FixZFactor	Z-factor	FLOAT	Static	4	AUTO	X
	VTX_GasMixture	Gas mixture	BIT_ENUM32	Static	4	AUTO	X
	VTX_InletConfig	Inlet configuration	ENUM16	Static	2	AUTO	X
	VTX_InletLength	Inlet run	FLOAT	Static	4	AUTO	X
	SU_Length	Length unit	ENUM16	Static	2	AUTO	X
	SU_Mass	Mass unit	ENUM16	Static	2	AUTO	X
	SU_Volume	Volume unit	ENUM16	Static	2	AUTO	X
	SU_CorrVolume	Corrected volume unit	ENUM16	Static	2	AUTO	X
	SU_Energy	Energy unit	ENUM16	Static	2	AUTO	X
	SU_VolumeFlow	Volume flow unit	ENUM16	Static	2	AUTO	X
	SU_MassFlow	Mass flow unit	ENUM16	Static	2	AUTO	X
	SU_CorrVolumeFlow	Corrected volume flow unit	ENUM16	Static	2	AUTO	X
	SU_Velocity	Velocity unit	ENUM16	Static	2	AUTO	X
	SU_Pressure	Pressure unit	ENUM16	Static	2	AUTO	X
	SU_CalorificValueMass	Calorific value unit	ENUM16	Static	2	AUTO	X
	SU_CalorificValue	Calorific value unit	ENUM16	Static	2	AUTO	X
	SU_EnergyFlow	Energy flow unit	ENUM16	Static	2	AUTO	X
	SU_SpecificEnthalpy	Specific enthalpy unit	ENUM16	Static	2	AUTO	X
	SU_SpecificHeatCapacity	Specific heat capacity unit	ENUM16	Static	2	AUTO	X
	SU_Temperature	Temperature unit	ENUM16	Static	2	AUTO	X
	SU_Density	Density unit	ENUM16	Static	2	AUTO	X
	VTX_FluidSelectorGas	Select gas type	ENUM16	Static	2	AUTO	X
	VTX_FluidSelectorLiquid	Select liquid type	ENUM16	Static	2	AUTO	X
	VTX_FluidSelectorSteam	Select steam type	ENUM16	Static	2	AUTO	X
	VTX_DensityCalcSelector	Density calculation	ENUM16	Static	2	AUTO	X
	VTX_EnthalpyCalcSelector	Enthalpy calculation	ENUM16	Static	2	AUTO	X
	TRDASUP_View3	View -3-	VIEW3	Dynamic	17		
	TRDASUP_StRev	Static Revision	UINT16	Static	2		
	TRDASUP_BlockErr	Block Error	BIT_ENUM16	Dynamic	2		

Relative Index	Name	Label	Data type	Storage Class	Size (Bytes)	MODE_BLK	Writability
	TRDASUP_TransducerType	Transducer Type	ENUM16	Static	2		
	TRDASUP_XdError	Transducer Error	ENUM8	Dynamic	1		
	TRDASUP_BlockErrDesc_1	Block error description	BIT_ENUM32	Dynamic	4		
	STD_LockingState	Locking status	BIT_ENUM16	Dynamic	2		
	TRDASUP_View4	View -4-	VIEW4	Static	101		
	TRDASUP_StRev	Static Revision	UINT16	Static	2		
	TRDASUP_Strategy	Strategy	UINT16	Static	2	AUTO	X
	TRDASUP_AlertKey	Alert Key	UINT8	Static	1	AUTO	X
	TRDASUP_TransducerType	Transducer Type	ENUM16	Static	2		
	STD_UserLevel	Access status tooling	ENUM16	Static	2		
	STD_SWOptionActiveOverview	Software option overview	BIT_ENUM32	Static	4		
	PFS_OperatingMode	Operating mode	ENUM16	Static	2	AUTO	X
	PFS_PulseInputSelector	Assign pulse output	ENUM16	Static	2	AUTO	X
	PFS_PulseFailsafeMode	Failure mode	ENUM16	Static	2	AUTO	X
	PFS_PulseMeasuringMode	Measuring mode	ENUM16	Static	2	AUTO	X
	PFS_PulseWidth	Pulse width	FLOAT	Static	4	AUTO	X
	PFS_PulseValue	Value per pulse	FLOAT	Static	4	AUTO	X
	PFS_StateValueSelector	Assign status	ENUM16	Static	2	AUTO	X
	PFS_StateMode	Switch output function	ENUM16	Static	2	AUTO	X
	PFS_LimitCheckSelector	Assign limit	ENUM16	Static	2	AUTO	X
	PFS_MessageSelector	Assign diagnostic behavior	ENUM16	Static	2	AUTO	X
	PFS_StateSwitchOnValue	Switch-on value	FLOAT	Static	4	AUTO	X
	PFS_StateSwitchOnDelay	Switch-on delay	FLOAT	Static	4	AUTO	X
	PFS_StateSwitchOffValue	Switch-off value	FLOAT	Static	4	AUTO	X
	PFS_StateSwitchOffDelay	Switch-off delay	FLOAT	Static	4	AUTO	X
	PFS_StateFailsafeMode	Failure mode	ENUM16	Static	2	AUTO	X
	PFS_DirectionCheckSelector	Assign flow direction check	ENUM16	Static	2	AUTO	X
	PFS_OutSignalInvert	Invert output signal	ENUM16	Static	2	AUTO	X
	PFS_FrequencyInputSelector	Assign frequency output	ENUM16	Static	2	AUTO	X
	PFS_FrequencyMeasuringMode	Measuring mode	ENUM16	Static	2	AUTO	X
	PFS_FrequencyFailsafeMode	Failure mode	ENUM16	Static	2	AUTO	X

Relative Index	Name	Label	Data type	Storage Class	Size (Bytes)	MODE_BLK	Writability
	PFS_FrequencyFailsafeValue	Failure frequency	FLOAT	Static	4	AUTO	X
	PFS_FrequencyDamping	Damping output	FLOAT	Static	4	AUTO	X
	PFS_FrequencyMinFrequency	Minimum frequency value	FLOAT	Static	4	AUTO	X
	PFS_FrequencyMaxFrequency	Maximum frequency value	FLOAT	Static	4	AUTO	X
	PFS_FrequencyMinValue	Measuring value at minimum frequency	FLOAT	Static	4	AUTO	X
	PFS_FrequencyMaxValue	Measuring value at maximum frequency	FLOAT	Static	4	AUTO	X
	TIC_Channel	Assign process variable	ENUM16	Static	2	AUTO	X
	TIC_TotUnit	Unit totalizer	ENUM16	Static	2	AUTO	X
	TIC_Channel	Assign process variable	ENUM16	Static	2	AUTO	X
	TIC_TotUnit	Unit totalizer	ENUM16	Static	2	AUTO	X
	TIC_Channel	Assign process variable	ENUM16	Static	2	AUTO	X
	TIC_TotUnit	Unit totalizer	ENUM16	Static	2	AUTO	X
	TRDASUP_View4_2	AI View 4	VIEW4	Static	102		
	TRDASUP_StRev	Static Revision	UINT16	Static	2		
	VTX_MolPercentAr	Mol% Ar	FLOAT	Static	4	AUTO	X
	VTX_MolPercentC2H3Cl	Mol% C2H3Cl	FLOAT	Static	4	AUTO	X
	VTX_MolPercentC2H4	Mol% C2H4	FLOAT	Static	4	AUTO	X
	VTX_MolPercentC2H6	Mol% C2H6	FLOAT	Static	4	AUTO	X
	VTX_MolPercentC3H8	Mol% C3H8	FLOAT	Static	4	AUTO	X
	VTX_MolPercentCH4	Mol% CH4	FLOAT	Static	4	AUTO	X
	VTX_MolPercentCl2	Mol% Cl2	FLOAT	Static	4	AUTO	X
	VTX_MolPercentCO	Mol% CO	FLOAT	Static	4	AUTO	X
	VTX_MolPercentCO2	Mol% CO2	FLOAT	Static	4	AUTO	X
	VTX_MolPercentH2	Mol% H2	FLOAT	Static	4	AUTO	X
	VTX_MolPercentH2O	Mol% H2O	FLOAT	Static	4	AUTO	X
	VTX_MolPercentH2S	Mol% H2S	FLOAT	Static	4	AUTO	X
	VTX_MolPercentHCl	Mol% HCl	FLOAT	Static	4	AUTO	X
	VTX_MolPercentHe	Mol% He	FLOAT	Static	4	AUTO	X
	VTX_MolPercentiC4H10	Mol% i-C4H10	FLOAT	Static	4	AUTO	X
	VTX_MolPercentiC5H12	Mol% i-C5H12	FLOAT	Static	4	AUTO	X
	VTX_MolPercentKr	Mol% Kr	FLOAT	Static	4	AUTO	X
	VTX_MolPercentN2	Mol% N2	FLOAT	Static	4	AUTO	X
	VTX_MolPercentnC10H22	Mol% n-C10H22	FLOAT	Static	4	AUTO	X
	VTX_MolPercentnC4H10	Mol% n-C4H10	FLOAT	Static	4	AUTO	X

Relative Index	Name	Label	Data type	Storage Class	Size (Bytes)	MODE_BLK	Writability
	VTX_MolPercentnC5H12	Mol% n-C5H12	FLOAT	Static	4	AUTO	X
	VTX_MolPercentnC6H14	Mol% n-C6H14	FLOAT	Static	4	AUTO	X
	VTX_MolPercentnC7H16	Mol% n-C7H16	FLOAT	Static	4	AUTO	X
	VTX_MolPercentnC8H18	Mol% n-C8H18	FLOAT	Static	4	AUTO	X
	VTX_MolPercentnC9H20	Mol% n-C9H20	FLOAT	Static	4	AUTO	X
	TRDASUP_View4_3	AI View 4	VIEW4	Static	78		
	TRDASUP_StRev	Static Revision	UINT16	Static	2		
	VTX_InstallationFactor	Installation factor	FLOAT	Static	4	AUTO	X
	VTX_MatingPipeDiameter	Mating pipe diameter	FLOAT	Static	4	AUTO	X
	VTX_MolPercentNe	Mol% Ne	FLOAT	Static	4	AUTO	X
	VTX_MolPercentNH3	Mol% NH3	FLOAT	Static	4	AUTO	X
	VTX_MolPercentO2	Mol% O2	FLOAT	Static	4	AUTO	X
	VTX_MolPercentOtherGas	Mol% other gas	FLOAT	Static	4	AUTO	X
	VTX_MolPercentSO2	Mol% SO2	FLOAT	Static	4	AUTO	X
	VTX_MolPercentXe	Mol% Xe	FLOAT	Static	4	AUTO	X
	VTX_ReferenceCombustionTemperature	Reference combustion temperature	FLOAT	Static	4	AUTO	X
	VTX_ReferenceDensity	Reference density	FLOAT	Static	4	AUTO	X
	VTX_ReferenceGrossCalorificValue	Reference gross calorific value	FLOAT	Static	4	AUTO	X
	VTX_ReferencePressure	Reference pressure	FLOAT	Static	4	AUTO	X
	VTX_ReferenceTemperature	Reference temperature	FLOAT	Static	4	AUTO	X
	VTX_ReferenceZFactor	Reference Z-factor	FLOAT	Static	4	AUTO	X
	VTX_RelativeDensity	Relative density	FLOAT	Static	4	AUTO	X
	VTX_RelativeHumidity	Relative humidity	FLOAT	Static	4	AUTO	X
	VTX_SingleGasSelector	Gas type	ENUM16	Static	2	AUTO	X
	VTX_SpecificHeatCapacity	Specific heat capacity	FLOAT	Static	4	AUTO	X
	VTX_SteamQualitySelector	Steam quality	ENUM16	Static	2	AUTO	X
	VTX_MediumSelector	Select medium	ENUM16	Static	2	AUTO	X
	VTX_Package	Sensor version	ENUM16	Static	2	AUTO	X

17.1.3 Transducer Block Diagnostic

Relative Index	Name	Label	Data type	Storage Class	Size (Bytes)	MODE_BLK	Writability
11	TRDDIAG_TransducerTypeVer		UINT16	Static	2		
12	TRDDIAG_XdError	Transducer Error	ENUM8	Dynamic	1		

Relative Index	Name	Label	Data type	Storage Class	Size (Bytes)	MODE_BLK	Writability
13	TRDDIAG_CollectionDirectory	Collection Directory	UINT32	Static	4		
14	TRDDIAG_BlockErrDesc_1	Block error description	BIT_ENUM32	Dynamic	4		
15	TRDDIAG_STD_UserLevel_1	Access status tooling	ENUM16	Static	2		
16	TRDDIAG_STD_LockingState_1	Locking status	BIT_ENUM16	Dynamic	2		
17	TRDDIAG_STD_SWOptionActiveOverview_1	Software option overview	BIT_ENUM32	Static	4		
18	TRDDIAG_SPV_CurrentEventCategory_1	Status signal	ENUM8	Static	1		
19	TRDDIAG_SPV_CurrentEventId_1	Actual diagnostics	UINT16	Static	2		
20	TRDDIAG_SPV_CurrentEventSpecificData_1	Actual diag channel	UINT8	Static	1		
21	TRDDIAG_SPV_CurrentTimestamp_1	Timestamp	STRING	Static	14		
22	TRDDIAG_SPV_PreviousEventCategory_1	Event category	ENUM8	Static	1		
23	TRDDIAG_SPV_PreviousEventId_1	Previous diagnostics	UINT16	Static	2		
24	TRDDIAG_SPV_PreviousEventSpecificData_1	Previous diag channel	UINT8	Static	1		
25	TRDDIAG_SPV_PreviousTimestamp_1	Timestamp	STRING	Static	14		
26	TRDDIAG_SPV_OperationHoursSinceReset_1	Operating time from restart	STRING	Dynamic	14		
27	TRDDIAG_SPV_OperationHours_1	Operating time	STRING	Dynamic	14		
28	TRDDIAG_SPV_DiagItem1EventCategory_1	Event category 1	ENUM8	Static	1		
29	TRDDIAG_SPV_DiagItem1EventId_1	Diagnostics 1	UINT16	Static	2		
30	TRDDIAG_SPV_DiagItem1Timestamp_1	Timestamp	STRING	Static	14		
31	TRDDIAG_SPV_DiagItem1EventSpecificData_1	Diagnostics 1 channel	UINT8	Static	1		
32	TRDDIAG_SPV_DiagItem2EventCategory_1	Event category 2	ENUM8	Static	1		
33	TRDDIAG_SPV_DiagItem2EventId_1	Diagnostics 2	UINT16	Static	2		
34	TRDDIAG_SPV_DiagItem2EventSpecificData_1	Diagnostics 2 channel	UINT8	Static	1		
35	TRDDIAG_SPV_DiagItem2Timestamp_1	Timestamp	STRING	Static	14		
36	TRDDIAG_SPV_DiagItem3EventCategory_1	Event category 3	ENUM8	Static	1		
37	TRDDIAG_SPV_DiagItem3EventId_1	Diagnostics 3	UINT16	Static	2		
38	TRDDIAG_SPV_DiagItem3EventSpecificData_1	Diagnostics 3 channel	UINT8	Static	1		
39	TRDDIAG_SPV_DiagItem3Timestamp_1	Timestamp	STRING	Static	14		
40	TRDDIAG_SPV_DiagItem4EventCategory_1	Event category 4	ENUM8	Static	1		
41	TRDDIAG_SPV_DiagItem4EventId_1	Diagnostics 4	UINT16	Static	2		
42	TRDDIAG_SPV_DiagItem4Timestamp_1	Timestamp	STRING	Static	14		
43	TRDDIAG_SPV_DiagItem4EventSpecificData_1	Diagnostics 4 channel	UINT8	Static	1		
44	TRDDIAG_SPV_DiagItem5EventCategory_1	Event category 5	ENUM8	Static	1		
45	TRDDIAG_SPV_DiagItem5EventId_1	Diagnostics 5	UINT16	Static	2		
46	TRDDIAG_SPV_DiagItem5EventSpecificData_1	Diagnostics 5 channel	UINT8	Static	1		

Relative Index	Name	Label	Data type	Storage Class	Size (Bytes)	MODE_BLK	Writability
47	TRDDIAG_SPV_DiagItem5Timestamp_1	Timestamp	STRING	Static	14		
48	TRDDIAG_SPV_FilterOptions_1	Filter options	ENUM8	Static	1	AUTO	X
49	TRDDIAG_SPV_ClearEventList_1	Clear event list	ENUM16	Static	2	AUTO	X
50	TRDDIAG_MassFlowInput	Mass flow	Standard	Dynamic	5		
	TRDDIAG_Out2Status	Status	ENUM8	Dynamic	1		
	FLOW_Out2Value	Mass flow	FLOAT	Dynamic	4		
51	TRDDIAG_MassFlowCondensateInput	Condensate mass flow	Standard	Dynamic	5		
	TRDDIAG_Out8Status	Status	ENUM8	Dynamic	1		
	FLOW_Out8Value	Condensate mass flow	FLOAT	Dynamic	4		
52	TRDDIAG_OverallMassFlowInput	Total mass flow	Standard	Dynamic	5		
	TRDDIAG_Out7Status	Status	ENUM8	Dynamic	1		
	FLOW_Out7Value	Total mass flow	FLOAT	Dynamic	4		
53	TRDDIAG_SU_MassFlow_1	Mass flow unit	ENUM16	Static	2	AUTO	X
54	TRDDIAG_FlowVelocityInput	Flow velocity	Standard	Dynamic	5		
	TRDDIAG_Out12Status	Status	ENUM8	Dynamic	1		
	FLOW_Out12Value	Flow velocity	FLOAT	Dynamic	4		
55	TRDDIAG_SU_Velocity_1	Velocity unit	ENUM16	Static	2	AUTO	X
56	TRDDIAG_VolumeFlowInput	Volume flow	Standard	Dynamic	5		
	TRDDIAG_Out1Status	Status	ENUM8	Dynamic	1		
	FLOW_Out1Value	Volume flow	FLOAT	Dynamic	4		
57	TRDDIAG_SU_VolumeFlow_1	Volume flow unit	ENUM16	Static	2	AUTO	X
58	TRDDIAG_CorrVolumeFlowInput	Corrected volume flow	Standard	Dynamic	5		
	TRDDIAG_Out3Status	Status	ENUM8	Dynamic	1		
	FLOW_Out3Value	Corrected volume flow	FLOAT	Dynamic	4		
59	TRDDIAG_SU_CorrVolumeFlow_1	Corrected volume flow unit	ENUM16	Static	2	AUTO	X
60	TRDDIAG_TemperatureInput	Temperature	Standard	Dynamic	5		
	TRDDIAG_Out4Status	Status	ENUM8	Dynamic	1		
	FLOW_Out4Value	Temperature	FLOAT	Dynamic	4		
61	TRDDIAG_SU_Temperature_1	Temperature unit	ENUM16	Static	2	AUTO	X
62	TRDDIAG_CalcSaturatedSteamPressureInput	Calculated saturated steam pressure	Standard	Dynamic	5		
	TRDDIAG_Out5Status	Status	ENUM8	Dynamic	1		
	FLOW_Out5Value	Calculated saturated steam pressure	FLOAT	Dynamic	4		
63	TRDDIAG_SU_Pressure_1	Pressure unit	ENUM16	Static	2	AUTO	X
64	TRDDIAG_SteamQualityInput	Steam quality	Standard	Dynamic	5		
	TRDDIAG_Out6Status	Status	ENUM8	Dynamic	1		
	FLOW_Out6Value	Steam quality	FLOAT	Dynamic	4		

Relative Index	Name	Label	Data type	Storage Class	Size (Bytes)	MODE_BLK	Writability
65	TRDDIAG_EnergyFlowInput	Energy flow	Standard	Dynamic	5		
	TRDDIAG_Out9Status	Status	ENUM8	Dynamic	1		
	FLOW_Out9Value	Energy flow	FLOAT	Dynamic	4		
66	TRDDIAG_HeatFlowDifferenceInput	Heat flow difference	Standard	Dynamic	5		
	TRDDIAG_Out10Status	Status	ENUM8	Dynamic	1		
	FLOW_Out10Value	Heat flow difference	FLOAT	Dynamic	4		
67	TRDDIAG_SU_EnergyFlow_1	Energy flow unit	ENUM16	Static	2	AUTO	X
68	TRDDIAG_ReynoldsNumberInput	Reynolds number	Standard	Dynamic	5		
	TRDDIAG_Out11Status	Status	ENUM8	Dynamic	1		
	FLOW_Out11Value	Reynolds number	FLOAT	Dynamic	4		
69	TRDDIAG_PFS_OperatingMode_1	Operating mode	ENUM16	Static	2	AUTO	X
70	TRDDIAG_PFS_StateSimulationMode_1	Switch output simulation	ENUM16	Static	2	AUTO	X
71	TRDDIAG_PFS_StateSimulationValue_1	Switch status	ENUM16	Static	2	AUTO	X
72	TRDDIAG_PFS_StateOutValue_1	Switch status	ENUM16	Dynamic	2		
73	TRDDIAG_PFS_PulseSimulationMode_1	Pulse simulation	ENUM16	Static	2	AUTO	X
74	TRDDIAG_PFS_PulseSimulationValue_1	Pulse value	UINT16	Static	2	AUTO	X
75	TRDDIAG_PFS_PulseOutValue_1	Pulse output	FLOAT	Dynamic	4		
76	TRDDIAG_PFS_FrequencySimulationMode_1	Frequency simulation	ENUM16	Static	2	AUTO	X
77	TRDDIAG_PFS_FrequencySimulationValue_1	Frequency value	FLOAT	Static	4	AUTO	X
78	TRDDIAG_PFS_FrequencyOutValue_1	Output frequency	FLOAT	Dynamic	4		
79	TRDDIAG_SPV_SimulationFailsafeMode_1	Simulation device alarm	ENUM16	Static	2	AUTO	X
80	TRDDIAG_SPV_SimulationEvent_1	Simulation diagnostic event	UINT32	Static	4	AUTO	X
81	TRDDIAG_SPV_SimulateDiagCodeGroup_1	Diagnostic event category	ENUM8	Static	1	AUTO	X
82	TRDDIAG_SPV_SimulateDiagCode_1	Simulation diagnostic event	ENUM32	Static	4	AUTO	X
83	TRDDIAG_HB_InputSelector1_1	Assign channel 1	ENUM16	Static	2	AUTO	X
84	TRDDIAG_HB_InputSelector2_1	Assign channel 2	ENUM16	Static	2	AUTO	X
85	TRDDIAG_HB_InputSelector3_1	Assign channel 3	ENUM16	Static	2	AUTO	X
86	TRDDIAG_HB_InputSelector4_1	Assign channel 4	ENUM16	Static	2	AUTO	X
87	TRDDIAG_HB_TrendInterval_1	Logging interval	FLOAT	Static	4	AUTO	X
88	TRDDIAG_HB_TrendClear_1	Clear logging data	ENUM16	Static	2	AUTO	X
89	TRDDIAG_SPV_AlarmDelay_1	Alarm delay	FLOAT	Static	4	AUTO	X
90	TRDDIAG_FF912ConfigArea	CA	Standard	Static	30		X
	TRDDIAG_FF912ConfigArea_1	Configurable Area Bit 1	UINT16	Static	2	AUTO	X
	TRDDIAG_FF912ConfigArea_2	Configurable Area Bit 2	UINT16	Static	2	AUTO	X
	TRDDIAG_FF912ConfigArea_3	Configurable Area Bit 3	UINT16	Static	2	AUTO	X

Relative Index	Name	Label	Data type	Storage Class	Size (Bytes)	MODE_BLK	Writability
	TRDDIAG_FF912ConfigArea_4	Configurable Area Bit 4	UINT16	Static	2	AUTO	X
	TRDDIAG_FF912ConfigArea_5	Configurable Area Bit 5	UINT16	Static	2	AUTO	X
	TRDDIAG_FF912ConfigArea_6	Configurable Area Bit 6	UINT16	Static	2	AUTO	X
	TRDDIAG_FF912ConfigArea_7	Configurable Area Bit 7	UINT16	Static	2	AUTO	X
	TRDDIAG_FF912ConfigArea_8	Configurable Area Bit 8	UINT16	Static	2	AUTO	X
	TRDDIAG_FF912ConfigArea_9	Configurable Area Bit 9	UINT16	Static	2	AUTO	X
	TRDDIAG_FF912ConfigArea_10	Configurable Area Bit 10	UINT16	Static	2	AUTO	X
	TRDDIAG_FF912ConfigArea_11	Configurable Area Bit 11	UINT16	Static	2	AUTO	X
	TRDDIAG_FF912ConfigArea_12	Configurable Area Bit 12	UINT16	Static	2	AUTO	X
	TRDDIAG_FF912ConfigArea_13	Configurable Area Bit 13	UINT16	Static	2	AUTO	X
	TRDDIAG_FF912ConfigArea_14	Configurable Area Bit 14	UINT16	Static	2	AUTO	X
	TRDDIAG_FF912ConfigArea_15	Configurable Area Bit 15	UINT16	Static	2	AUTO	X
91	TRDDIAG_FF912StatusSelect	Assign status of diagnostic number 022	ENUM8	Static	1	AUTO	X
92	TRDDIAG_FF912StatusSelect_2	Assign status of diagnostic number 122	ENUM8	Static	1	AUTO	X
93	TRDDIAG_FF912StatusSelect_3	Assign status of diagnostic number 350	ENUM8	Static	1	AUTO	X
94	TRDDIAG_FF912StatusSelect_19	Assign status of diagnostic number 371	ENUM8	Static	1	AUTO	
95	TRDDIAG_FF912StatusSelect_20	Assign status of diagnostic number 828	ENUM8	Static	1	AUTO	
96	TRDDIAG_FF912StatusSelect_6	Assign status of diagnostic number 829	ENUM8	Static	1	AUTO	X
97	TRDDIAG_FF912StatusSelect_7	Assign status of diagnostic number 832	ENUM8	Static	1	AUTO	X
98	TRDDIAG_FF912StatusSelect_8	Assign status of diagnostic number 833	ENUM8	Static	1	AUTO	X
99	TRDDIAG_FF912StatusSelect_9	Assign status of diagnostic number 834	ENUM8	Static	1	AUTO	X
100	TRDDIAG_FF912StatusSelect_10	Assign status of diagnostic number 835	ENUM8	Static	1	AUTO	X

Relative Index	Name	Label	Data type	Storage Class	Size (Bytes)	MODE_BLK	Writability
101	TRDDIAG_FF912StatusSelect_11	Assign status of diagnostic number 841	ENUM8	Static	1	AUTO	X
102	TRDDIAG_FF912StatusSelect_12	Assign status of diagnostic number 844	ENUM8	Static	1	AUTO	X
103	TRDDIAG_FF912StatusSelect_13	Assign status of diagnostic number 870	ENUM8	Static	1	AUTO	X
104	TRDDIAG_FF912StatusSelect_14	Assign status of diagnostic number 871	ENUM8	Static	1	AUTO	X
105	TRDDIAG_FF912StatusSelect_15	Assign status of diagnostic number 872	ENUM8	Static	1	AUTO	X
106	TRDDIAG_FF912StatusSelect_16	Assign status of diagnostic number 873	ENUM8	Static	1	AUTO	X
107	TRDDIAG_FF912StatusSelect_17	Assign status of diagnostic number 945	ENUM8	Static	1	AUTO	X
108	TRDDIAG_FF912StatusSelect_18	Assign status of diagnostic number 947	ENUM8	Static	1	AUTO	X
109	TRDDIAG_VTX_FluidSelectorGas_1	Select gas type	ENUM16	Static	2	AUTO	X
110	TRDDIAG_VTX_FluidSelectorLiquid_1	Select liquid type	ENUM16	Static	2	AUTO	X
111	TRDDIAG_VTX_FluidSelectorSteam_1	Select steam type	ENUM16	Static	2	AUTO	X
112	TRDDIAG_VTX_MediumSelector_1	Select medium	ENUM16	Static	2	AUTO	X
113	TRDDIAG_SPV_EventClassTempSensorError_1	Assign behavior of diagnostic no. 022	ENUM16	Static	2	AUTO	X
114	TRDDIAG_SPV_EventClassTempSensorWarning_1	Assign behavior of diagnostic no. 122	ENUM16	Static	2	AUTO	X
115	TRDDIAG_SPV_EventClassVPATempReference_1	Assign behavior of diagnostic no. 350	ENUM16	Static	2	AUTO	X
116	TRDDIAG_SPV_EventClassVPATempSensorError_1	Assign behavior of diagnostic no. 371	ENUM16	Static	2	AUTO	X
117	TRDDIAG_SPV_EventClassRangeFrequencyOut_1	Assign behavior of diagnostic no. 442	ENUM16	Static	2	AUTO	X
118	TRDDIAG_SPV_EventClassRangePulseOut_1	Assign behavior of diagnostic no. 443	ENUM16	Static	2	AUTO	X
119	TRDDIAG_SPV_EventClassVPATempLow_1	Assign behavior of diagnostic no. 828	ENUM16	Static	2	AUTO	X
120	TRDDIAG_SPV_EventClassVPATempHigh_1	Assign behavior of diagnostic no. 829	ENUM16	Static	2	AUTO	X
121	TRDDIAG_SPV_EventClassElecTempHigh_1	Assign behavior of diagnostic no. 832	ENUM16	Static	2	AUTO	X
122	TRDDIAG_SPV_EventClassElecTempLow_1	Assign behavior of diagnostic no. 833	ENUM16	Static	2	AUTO	X
123	TRDDIAG_SPV_EventClassFluidTempHigh_1	Assign behavior of diagnostic no. 834	ENUM16	Static	2	AUTO	X
124	TRDDIAG_SPV_EventClassFluidTempLow_1	Assign behavior of diagnostic no. 835	ENUM16	Static	2	AUTO	X

Relative Index	Name	Label	Data type	Storage Class	Size (Bytes)	MODE_BLK	Writability
125	TRDDIAG_SPV_EventClassVelocityLimit_1	Assign behavior of diagnostic no. 841	ENUM16	Static	2	AUTO	X
126	TRDDIAG_SPV_EventClassDSCSensorResonance_1	Assign behavior of diagnostic no. 844	ENUM16	Static	2	AUTO	X
127	TRDDIAG_SPV_EventClassReynoldsnumberLimit_1	Assign behavior of diagnostic no. 870	ENUM16	Static	2	AUTO	X
128	TRDDIAG_SPV_EventClassLimitSuperheatedSteam_1	Assign behavior of diagnostic no. 871	ENUM16	Static	2	AUTO	X
129	TRDDIAG_SPV_EventClassDrynessFractionLimit_1	Assign behavior of diagnostic no. 872	ENUM16	Static	2	AUTO	X
130	TRDDIAG_SPV_EventClassNoSteam_1	Assign behavior of diagnostic no. 873	ENUM16	Static	2	AUTO	X
131	TRDDIAG_SPV_EventClassOutOfPTCurve_1	Assign behavior of diagnostic no. 945	ENUM16	Static	2	AUTO	X
132	TRDDIAG_SPV_EventClassVibrationLimitExceeded_1	Assign behavior of diagnostic no. 947	ENUM16	Static	2	AUTO	X
133	TRDDIAG_VTX_Density_1	Density	FLOAT	Dynamic	4		
134	TRDDIAG_SU_Density_1	Density unit	ENUM16	Static	2	AUTO	X
135	TRDDIAG_VTX_Pressure_1	Pressure	FLOAT	Dynamic	4		
136	TRDDIAG_VTX_ZFactor_1	Compressibility factor	FLOAT	Dynamic	4		
137	TRDDIAG_VTX_SaturationTemperature_1	Saturation temperature	FLOAT	Dynamic	4		
138	TRDDIAG_VTX_VortexFrequency_1	Vortex frequency	FLOAT	Dynamic	4		
139	TRDDIAG_VTX_Enthalpy_1	Enthalpy	FLOAT	Dynamic	4		
140	TRDDIAG_SU_SpecificEnthalpy_1	Specific enthalpy unit	ENUM16	Static	2	AUTO	X
141	TRDDIAG_SPV_DiagnoseListeItemsNeedUpdate_1		UINT32	Dynamic	4		
142	TRDDIAG_SPV_CurrentEventCategorySeparated_1	Status signal	ENUM8	Dynamic	1		
143	TRDDIAG_SPV_CurrentSysConditionUnion_1	Actual diagnostics	UINT32	Static	4		
144	TRDDIAG_SPV_PreviousSysConditionUnion_1	Previous diagnostics	UINT32	Static	4		
145	TRDDIAG_SPV_DiagListItem1Union_1	Diagnostics 1	UINT32	Static	4		
146	TRDDIAG_SPV_DiagListItem2Union_1	Diagnostics 2	UINT32	Static	4		
147	TRDDIAG_SPV_DiagListItem3Union_1	Diagnostics 3	UINT32	Static	4		
148	TRDDIAG_SPV_DiagListItem4Union_1	Diagnostics 4	UINT32	Static	4		
149	TRDDIAG_SPV_DiagListItem5Union_1	Diagnostics 5	UINT32	Static	4		
150	TRDDIAG_SPV_ClampingVoltage_1	Terminal voltage 1	FLOAT	Dynamic	4		
151	TRDDIAG_FLOW_SimulationSelector_1	Assign simulation process variable	ENUM16	Static	2	AUTO	X
152	TRDDIAG_FLOW_SimulationValue_1	Value process variable	FLOAT	Static	4	AUTO	X
	TRDDIAG_View1	View -1-	VIEW1	Dynamic	114		
	TRDDIAG_StRev	Static Revision	UINT16	Static	2		
	TRDDIAG_BlockErr	Block Error	BIT_ENUM16	Dynamic	2		
	TRDDIAG_TransducerType	Transducer Type	ENUM16	Static	2		
	TRDDIAG_XdError	Transducer Error	ENUM8	Dynamic	1		

Relative Index	Name	Label	Data type	Storage Class	Size (Bytes)	MODE_BLK	Writability
	TRDDIAG_BlockErrDesc_1	Block error description	BIT_ENUM32	Dynamic	4		
	STD_LockingState	Locking status	BIT_ENUM16	Dynamic	2		
	SPV_OperationHoursSinceReset	Operating time from restart	STRING	Dynamic	14		
	SPV_OperationHours	Operating time	STRING	Dynamic	14		
	SPV_DiagnoseListeItemsNeedUpdate		UINT32	Dynamic	4		
	SPV_CurrentEventCategorySeparated	Status signal	ENUM8	Dynamic	1		
	SPV_ClampingVoltage	Terminal voltage 1	FLOAT	Dynamic	4		
	TRDDIAG_View2	View -2-	VIEW2	Static	99		
	TRDDIAG_StRev	Static Revision	UINT16	Static	2		
	TRDDIAG_TransducerType	Transducer Type	ENUM16	Static	2		
	STD_UserLevel	Access status tooling	ENUM16	Static	2		
	STD_SWOptionActiveOverview	Software option overview	BIT_ENUM32	Static	4		
	SPV_CurrentTimestamp	Timestamp	STRING	Static	14		
	SPV_DiagItem1Timestamp	Timestamp	STRING	Static	14		
	SPV_DiagItem2Timestamp	Timestamp	STRING	Static	14		
	SPV_DiagItem3Timestamp	Timestamp	STRING	Static	14		
	TRDDIAG_FF912StatusSelect	Assign status of diagnostic number 022	ENUM8	Static	1	AUTO	X
	TRDDIAG_FF912StatusSelect_2	Assign status of diagnostic number 122	ENUM8	Static	1	AUTO	X
	TRDDIAG_FF912StatusSelect_3	Assign status of diagnostic number 350	ENUM8	Static	1	AUTO	X
	TRDDIAG_FF912StatusSelect_6	Assign status of diagnostic number 829	ENUM8	Static	1	AUTO	X
	TRDDIAG_FF912StatusSelect_7	Assign status of diagnostic number 832	ENUM8	Static	1	AUTO	X
	TRDDIAG_FF912StatusSelect_8	Assign status of diagnostic number 833	ENUM8	Static	1	AUTO	X
	TRDDIAG_FF912StatusSelect_9	Assign status of diagnostic number 834	ENUM8	Static	1	AUTO	X
	TRDDIAG_FF912StatusSelect_10	Assign status of diagnostic number 835	ENUM8	Static	1	AUTO	X
	TRDDIAG_FF912StatusSelect_11	Assign status of diagnostic number 841	ENUM8	Static	1	AUTO	X
	TRDDIAG_FF912StatusSelect_12	Assign status of diagnostic number 844	ENUM8	Static	1	AUTO	X

Relative Index	Name	Label	Data type	Storage Class	Size (Bytes)	MODE_BLK	Writability
	TRDDIAG_FF912StatusSelect_13	Assign status of diagnostic number 870	ENUM8	Static	1	AUTO	X
	TRDDIAG_FF912StatusSelect_14	Assign status of diagnostic number 871	ENUM8	Static	1	AUTO	X
	TRDDIAG_FF912StatusSelect_15	Assign status of diagnostic number 872	ENUM8	Static	1	AUTO	X
	SPV_CurrentSysConditionUnion	Actual diagnostics	UINT32	Static	4		
	SPV_PreviousSysConditionUnion	Previous diagnostics	UINT32	Static	4		
	SPV_DiagListItem1Union	Diagnostics 1	UINT32	Static	4		
	SPV_DiagListItem2Union	Diagnostics 2	UINT32	Static	4		
	SPV_DiagListItem3Union	Diagnostics 3	UINT32	Static	4		
	TRDDIAG_View3	View -3-	VIEW3	Dynamic	50		
	TRDDIAG_StRev	Static Revision	UINT16	Static	2		
	TRDDIAG_BlockErr	Block Error	BIT_ENUM16	Dynamic	2		
	TRDDIAG_TransducerType	Transducer Type	ENUM16	Static	2		
	TRDDIAG_XdError	Transducer Error	ENUM8	Dynamic	1		
	TRDDIAG_BlockErrDesc_1	Block error description	BIT_ENUM32	Dynamic	4		
	STD_LockingState	Locking status	BIT_ENUM16	Dynamic	2		
	SPV_OperationHoursSinceReset	Operating time from restart	STRING	Dynamic	14		
	SPV_OperationHours	Operating time	STRING	Dynamic	14		
	SPV_DiagnoseListeItemsNeedUpdate		UINT32	Dynamic	4		
	SPV_CurrentEventCategorySeparated	Status signal	ENUM8	Dynamic	1		
	TRDDIAG_View4	View -4-	VIEW4	Static	93		
	TRDDIAG_StRev	Static Revision	UINT16	Static	2		
	TRDDIAG_Strategy	Strategy	UINT16	Static	2	AUTO	X
	TRDDIAG_AlertKey	Alert Key	UINT8	Static	1	AUTO	X
	TRDDIAG_TransducerType	Transducer Type	ENUM16	Static	2		
	SPV_DiagItem4Timestamp	Timestamp	STRING	Static	14		
	SPV_DiagItem5Timestamp	Timestamp	STRING	Static	14		
	SPV_FilterOptions	Filter options	ENUM8	Static	1	AUTO	X
	SPV_ClearEventList	Clear event list	ENUM16	Static	2	AUTO	X
	SU_MassFlow	Mass flow unit	ENUM16	Static	2	AUTO	X
	SU_Velocity	Velocity unit	ENUM16	Static	2	AUTO	X
	SU_VolumeFlow	Volume flow unit	ENUM16	Static	2	AUTO	X
	SU_CorrVolumeFlow	Corrected volume flow unit	ENUM16	Static	2	AUTO	X
	SU_Temperature	Temperature unit	ENUM16	Static	2	AUTO	X
	SU_Pressure	Pressure unit	ENUM16	Static	2	AUTO	X
	SU_EnergyFlow	Energy flow unit	ENUM16	Static	2	AUTO	X
	PFS_OperatingMode	Operating mode	ENUM16	Static	2	AUTO	X

Relative Index	Name	Label	Data type	Storage Class	Size (Bytes)	MODE_BLK	Writability
	PFS_StateSimulationMode	Switch output simulation	ENUM16	Static	2	AUTO	X
	PFS_StateSimulationValue	Switch status	ENUM16	Static	2	AUTO	X
	PFS_PulseSimulationMode	Pulse simulation	ENUM16	Static	2	AUTO	X
	PFS_PulseSimulationValue	Pulse value	UINT16	Static	2	AUTO	X
	PFS_FrequencySimulationMode	Frequency simulation	ENUM16	Static	2	AUTO	X
	PFS_FrequencySimulationValue	Frequency value	FLOAT	Static	4	AUTO	X
	SPV_SimulationFailsafeMode	Simulation device alarm	ENUM16	Static	2	AUTO	X
	SPV_SimulationEvent	Simulation diagnostic event	UINT32	Static	4	AUTO	X
	SPV_SimulateDiagCodeGroup	Diagnostic event category	ENUM8	Static	1	AUTO	X
	SPV_SimulateDiagCode	Simulation diagnostic event	ENUM32	Static	4	AUTO	X
	SPV_DiagListItem4Union	Diagnostics 4	UINT32	Static	4		
	SPV_DiagListItem5Union	Diagnostics 5	UINT32	Static	4		
	FLOW_SimulationSelector	Assign simulation process variable	ENUM16	Static	2	AUTO	X
	FLOW_SimulationValue	Value process variable	FLOAT	Static	4	AUTO	X
	TRDDIAG_View4_2	View -4-1	VIEW4	Static	92		
	TRDDIAG_StRev	Static Revision	UINT16	Static	2		
	SPV_CurrentEventCategory	Status signal	ENUM8	Static	1		
	SPV_CurrentEventId	Actual diagnostics	UINT16	Static	2		
	SPV_CurrentEventSpecificData	Actual diag channel	UINT8	Static	1		
	SPV_PreviousEventCategory	Event category	ENUM8	Static	1		
	SPV_PreviousEventId	Previous diagnostics	UINT16	Static	2		
	SPV_PreviousEventSpecificData	Previous diag channel	UINT8	Static	1		
	SPV_PreviousTimestamp	Timestamp	STRING	Static	14		
	SPV_DiagItem1EventCategory	Event category 1	ENUM8	Static	1		
	SPV_DiagItem1EventId	Diagnostics 1	UINT16	Static	2		
	SPV_DiagItem1EventSpecificData	Diagnostics 1 channel	UINT8	Static	1		
	SPV_DiagItem2EventCategory	Event category 2	ENUM8	Static	1		
	SPV_DiagItem2EventId	Diagnostics 2	UINT16	Static	2		
	SPV_DiagItem2EventSpecificData	Diagnostics 2 channel	UINT8	Static	1		
	SPV_DiagItem3EventCategory	Event category 3	ENUM8	Static	1		
	SPV_DiagItem3EventId	Diagnostics 3	UINT16	Static	2		
	SPV_DiagItem3EventSpecificData	Diagnostics 3 channel	UINT8	Static	1		
	SPV_DiagItem4EventCategory	Event category 4	ENUM8	Static	1		

Relative Index	Name	Label	Data type	Storage Class	Size (Bytes)	MODE_BLK	Writability
	SPV_DiagItem4EventId	Diagnostics 4	UINT16	Static	2		
	SPV_DiagItem4EventSpecificData	Diagnostics 4 channel	UINT8	Static	1		
	SPV_DiagItem5EventCategory	Event category 5	ENUM8	Static	1		
	SPV_DiagItem5EventId	Diagnostics 5	UINT16	Static	2		
	SPV_DiagItem5EventSpecificData	Diagnostics 5 channel	UINT8	Static	1		
	HB_InputSelector1	Assign channel 1	ENUM16	Static	2	AUTO	X
	HB_InputSelector2	Assign channel 2	ENUM16	Static	2	AUTO	X
	HB_InputSelector3	Assign channel 3	ENUM16	Static	2	AUTO	X
	HB_InputSelector4	Assign channel 4	ENUM16	Static	2	AUTO	X
	HB_TrendInterval	Logging interval	FLOAT	Static	4	AUTO	X
	HB_TrendClear	Clear logging data	ENUM16	Static	2	AUTO	X
	SPV_AlarmDelay	Alarm delay	FLOAT	Static	4	AUTO	X
	TRDDIAG_View4_3	View -4-2	VIEW4	Static	42		
	TRDDIAG_StRev	Static Revision	UINT16	Static	2		
	SPV_EventClassTempSensorError	Assign behavior of diagnostic no. 022	ENUM16	Static	2	AUTO	X
	SPV_EventClassTempSensorWarning	Assign behavior of diagnostic no. 122	ENUM16	Static	2	AUTO	X
	SPV_EventClassVPATempReference	Assign behavior of diagnostic no. 350	ENUM16	Static	2	AUTO	X
	SPV_EventClassVPATempSensorError	Assign behavior of diagnostic no. 371	ENUM16	Static	2	AUTO	X
	SPV_EventClassRangeFrequencyOut	Assign behavior of diagnostic no. 442	ENUM16	Static	2	AUTO	X
	SPV_EventClassRangePulseOut	Assign behavior of diagnostic no. 443	ENUM16	Static	2	AUTO	X
	SPV_EventClassVPATempLow	Assign behavior of diagnostic no. 828	ENUM16	Static	2	AUTO	X
	SPV_EventClassVPATempHigh	Assign behavior of diagnostic no. 829	ENUM16	Static	2	AUTO	X
	SPV_EventClassElecTempHigh	Assign behavior of diagnostic no. 832	ENUM16	Static	2	AUTO	X
	SPV_EventClassElecTempLow	Assign behavior of diagnostic no. 833	ENUM16	Static	2	AUTO	X
	SPV_EventClassFluidTempHigh	Assign behavior of diagnostic no. 834	ENUM16	Static	2	AUTO	X
	SPV_EventClassFluidTempLow	Assign behavior of diagnostic no. 835	ENUM16	Static	2	AUTO	X
	SPV_EventClassVelocityLimit	Assign behavior of diagnostic no. 841	ENUM16	Static	2	AUTO	X
	SPV_EventClassDSCSensorResonance	Assign behavior of diagnostic no. 844	ENUM16	Static	2	AUTO	X
	SPV_EventClassReynoldsnumberLimit	Assign behavior of diagnostic no. 870	ENUM16	Static	2	AUTO	X
	SPV_EventClassLimitSuperheatedSteam	Assign behavior of diagnostic no. 871	ENUM16	Static	2	AUTO	X

Relative Index	Name	Label	Data type	Storage Class	Size (Bytes)	MODE_BLK	Writability
	SPV_EventClassDrynessFractionLimit	Assign behavior of diagnostic no. 872	ENUM16	Static	2	AUTO	X
	SPV_EventClassNoSteam	Assign behavior of diagnostic no. 873	ENUM16	Static	2	AUTO	X
	SPV_EventClassOutOfPTCurve	Assign behavior of diagnostic no. 945	ENUM16	Static	2	AUTO	X
	SPV_EventClassVibrationLimitExceeded	Assign behavior of diagnostic no. 947	ENUM16	Static	2	AUTO	X

17.1.4 Transducer Block Display

Relative Index	Name	Label	Data type	Storage Class	Size (Bytes)	MODE_BLK	Writability
11	TRDDISP_TransducerTypeVer		UINT16	Static	2		
12	TRDDISP_XdError	Transducer Error	ENUM8	Dynamic	1		
13	TRDDISP_CollectionDirectory	Collection Directory	UINT32	Static	4		
14	TRDDISP_BlockErrDesc_1	Block error description	BIT_ENUM32	Dynamic	4		
15	TRDDISP_STD_UserLevel_1	Access status tooling	ENUM16	Static	2		
16	TRDDISP_STD_LockingState_1	Locking status	BIT_ENUM16	Dynamic	2		
17	TRDDISP_DISP_LockingState_1	Locking status	ENUM16	Static	2		
18	TRDDISP_DISP_UserLevel_1	Access status display	ENUM16	Static	2		
19	TRDDISP_DISP_AccessCode_1	Enter access code	UINT16	Static	2	AUTO	X
20	TRDDISP_DISP_PrivateCode_1	Define access code	UINT16	Static	2	AUTO	X
21	TRDDISP_DISP_Language_1	Language	ENUM16	Static	2	AUTO	X
22	TRDDISP_DISP_MainMeasFormat_1	Format display	ENUM16	Static	2	AUTO	X
23	TRDDISP_DISP_InputSelector01_1	Value 1 display	ENUM16	Static	2	AUTO	X
24	TRDDISP_DISP_DecimalPlaces01_1	Decimal places 1	ENUM16	Static	2	AUTO	X
25	TRDDISP_DISP_InputSelector02_1	Value 2 display	ENUM16	Static	2	AUTO	X
26	TRDDISP_DISP_DecimalPlaces02_1	Decimal places 2	ENUM16	Static	2	AUTO	X
27	TRDDISP_DISP_InputSelector03_1	Value 3 display	ENUM16	Static	2	AUTO	X
28	TRDDISP_DISP_DecimalPlaces03_1	Decimal places 3	ENUM16	Static	2	AUTO	X
29	TRDDISP_DISP_InputSelector04_1	Value 4 display	ENUM16	Static	2	AUTO	X
30	TRDDISP_DISP_DecimalPlaces04_1	Decimal places 4	ENUM16	Static	2	AUTO	X
31	TRDDISP_DISP_AlternatingTime_1	Display interval	FLOAT	Static	4	AUTO	X
32	TRDDISP_DISP_DampingTime_1	Display damping	FLOAT	Static	4	AUTO	X
33	TRDDISP_DISP_MainMeasDesignation_1	Header	ENUM16	Static	2	AUTO	X
34	TRDDISP_DISP_FreeText_1	Header text	STRING	Static	12	AUTO	X
35	TRDDISP_DISP_SeparationCharacter_1	Separator	ENUM16	Static	2	AUTO	X
36	TRDDISP_DISP_VisuFormat_1		ENUM16	Static	2	AUTO	X
37	TRDDISP_DISP_Contrast_1	Contrast display	FLOAT	Static	4	AUTO	X
38	TRDDISP_DISP_BackLight_1	Backlight	ENUM16	Static	2	AUTO	X
39	TRDDISP_SPV_OperationHours_1	Operating time	STRING	Dynamic	14		

Relative Index	Name	Label	Data type	Storage Class	Size (Bytes)	MODE_BLK	Writability
40	TRDDISP_DISP_DeviceDateTimestamp_1	Last backup	STRING	Static	14	AUTO	
41	TRDDISP_DISP_BackupAction_1	Configuration management	ENUM16	Static	2	AUTO	X
42	TRDDISP_DISP_StateOfCompDisplayAndDevice_1	Comparison result	ENUM16	Static	2	AUTO	
43	TRDDISP_DISP_IsBacklightAvailable_1	Backlight	ENUM16	Static	2	AUTO	
44	TRDDISP_DISP_IsCloneAvailable_1	Is clone available	UINT8	Static	1	AUTO	X
45	TRDDISP_DISP_IsRestoreAvailable_1	Is restore available	UINT8	Static	1	AUTO	X
46	TRDDISP_DISP_BackupStatus_1	Backup state	ENUM16	Dynamic	2	AUTO	
47	TRDDISP_DISP_FixDisplayedInput_1		ENUM16	Static	2	AUTO	X
48	TRDDISP_STD_LanguagesSupported_1	Languages supported	BIT_ENUM32	Static	4		
49	TRDDISP_STD_SWOptionActiveOverview_1	Software option overview	BIT_ENUM32	Static	4		
50	TRDDISP_MDI_ModuleID_4	Module ID	UINT16	Static	2	AUTO	
51	TRDDISP_MDI_ModuleAvailable_4	Resource available	UINT8	Static	1		
52	TRDDISP_MDI_ModuleFirmwareRevision_4	Software revision	UINT32	Static	4		
53	TRDDISP_DISP_Value01_0Percent_1	0% bargraph value 1	FLOAT	Static	4	AUTO	X
54	TRDDISP_DISP_Value01_100Percent_1	100% bargraph value 1	FLOAT	Static	4	AUTO	X
55	TRDDISP_DISP_Value03_0Percent_1	0% bargraph value 3	FLOAT	Static	4	AUTO	X
56	TRDDISP_DISP_Value03_100Percent_1	100% bargraph value 3	FLOAT	Static	4	AUTO	X
57	TRDDISP_SU_VolumeFlow_1	Volume flow unit	ENUM16	Static	2	AUTO	X
58	TRDDISP_SU_MassFlow_1	Mass flow unit	ENUM16	Static	2	AUTO	X
59	TRDDISP_SU_CorrVolumeFlow_1	Corrected volume flow unit	ENUM16	Static	2	AUTO	X
60	TRDDISP_SU_Density_1	Density unit	ENUM16	Static	2	AUTO	X
61	TRDDISP_SU_EnergyFlow_1	Energy flow unit	ENUM16	Static	2	AUTO	X
62	TRDDISP_SU_Temperature_1	Temperature unit	ENUM16	Static	2	AUTO	X
63	TRDDISP_SU_DynamicViscosity_1	Dynamic viscosity unit	ENUM16	Static	2	AUTO	X
64	TRDDISP_SU_Pressure_1	Pressure unit	ENUM16	Static	2	AUTO	X
65	TRDDISP_SU_Velocity_1	Velocity unit	ENUM16	Static	2	AUTO	X
66	TRDDISP_TIC_Channel_1	Assign process variable	ENUM16	Static	2	AUTO	X
67	TRDDISP_TIC_TotUnit_1	Unit totalizer	ENUM16	Static	2	AUTO	X
68	TRDDISP_TIC_Channel_2	Assign process variable	ENUM16	Static	2	AUTO	X
69	TRDDISP_TIC_TotUnit_2	Unit totalizer	ENUM16	Static	2	AUTO	X
70	TRDDISP_TIC_Channel_3	Assign process variable	ENUM16	Static	2	AUTO	X
71	TRDDISP_TIC_TotUnit_3	Unit totalizer	ENUM16	Static	2	AUTO	X
	TRDDISP_View1	View -1-	VIEW1	Dynamic	19		
	TRDDISP_StRev	Static Revision	UINT16	Static	2		

Relative Index	Name	Label	Data type	Storage Class	Size (Bytes)	MODE_BLK	Writability
	TRDDISP_BlockErr	Block Error	BIT_ENUM16	Dynamic	2		
	TRDDISP_TransducerType	Transducer Type	ENUM16	Static	2		
	TRDDISP_XdError	Transducer Error	ENUM8	Dynamic	1		
	TRDDISP_BlockErrDesc_1	Block error description	BIT_ENUM32	Dynamic	4		
	STD_LockingState	Locking status	BIT_ENUM16	Dynamic	2		
	DISP_BackupStatus	Backup state	ENUM16	Dynamic	2	AUTO	
	TRDDISP_View2	View -2-	VIEW2	Static	62		
	TRDDISP_StRev	Static Revision	UINT16	Static	2		
	TRDDISP_TransducerType	Transducer Type	ENUM16	Static	2		
	DISP_UserLevel	Access status display	ENUM16	Static	2		
	DISP_AccessCode	Enter access code	UINT16	Static	2	AUTO	X
	DISP_PrivateCode	Define access code	UINT16	Static	2	AUTO	X
	DISP_Language	Language	ENUM16	Static	2	AUTO	X
	DISP_MainMeasFormat	Format display	ENUM16	Static	2	AUTO	X
	DISP_AlternatingTime	Display interval	FLOAT	Static	4	AUTO	X
	DISP_DampingTime	Display damping	FLOAT	Static	4	AUTO	X
	DISP_MainMeasDesignation	Header	ENUM16	Static	2	AUTO	X
	DISP_FreeText	Header text	STRING	Static	12	AUTO	X
	DISP_SeparationCharacter	Separator	ENUM16	Static	2	AUTO	X
	DISP_VisuFormat		ENUM16	Static	2	AUTO	X
	DISP_Contrast	Contrast display	FLOAT	Static	4	AUTO	X
	DISP_BackLight	Backlight	ENUM16	Static	2	AUTO	X
	DISP_BackupAction	Configuration management	ENUM16	Static	2	AUTO	X
	DISP_StateOfCompDisplayAndDevice	Comparison result	ENUM16	Static	2	AUTO	
	DISP_IsBacklightAvailable	Backlight	ENUM16	Static	2	AUTO	
	DISP_IsCloneAvailable	Is clone available	UINT8	Static	1	AUTO	X
	DISP_IsRestoreAvailable	Is restore available	UINT8	Static	1	AUTO	X
	DISP_FixDisplayedInput		ENUM16	Static	2	AUTO	X
	STD_LanguagesSupported	Languages supported	BIT_ENUM32	Static	4		
	MDI_ModuleID	Module ID	UINT16	Static	2	AUTO	
	TRDDISP_View3	View -3-	VIEW3	Dynamic	31		
	TRDDISP_StRev	Static Revision	UINT16	Static	2		
	TRDDISP_BlockErr	Block Error	BIT_ENUM16	Dynamic	2		
	TRDDISP_TransducerType	Transducer Type	ENUM16	Static	2		
	TRDDISP_XdError	Transducer Error	ENUM8	Dynamic	1		
	TRDDISP_BlockErrDesc_1	Block error description	BIT_ENUM32	Dynamic	4		
	STD_LockingState	Locking status	BIT_ENUM16	Dynamic	2		
	SPV_OperationHours	Operating time	STRING	Dynamic	14		

Relative Index	Name	Label	Data type	Storage Class	Size (Bytes)	MODE_BLK	Writability
	TRDDISP_View4	View -4-	VIEW4	Static	90		
	TRDDISP_StRev	Static Revision	UINT16	Static	2		
	TRDDISP_Strategy	Strategy	UINT16	Static	2	AUTO	X
	TRDDISP_AlertKey	Alert Key	UINT8	Static	1	AUTO	X
	TRDDISP_TransducerType	Transducer Type	ENUM16	Static	2		
	STD_UserLevel	Access status tooling	ENUM16	Static	2		
	DISP_LockingState	Locking status	ENUM16	Static	2		
	DISP_InputSelector01	Value 1 display	ENUM16	Static	2	AUTO	X
	DISP_DecimalPlaces01	Decimal places 1	ENUM16	Static	2	AUTO	X
	DISP_InputSelector02	Value 2 display	ENUM16	Static	2	AUTO	X
	DISP_DecimalPlaces02	Decimal places 2	ENUM16	Static	2	AUTO	X
	DISP_InputSelector03	Value 3 display	ENUM16	Static	2	AUTO	X
	DISP_DecimalPlaces03	Decimal places 3	ENUM16	Static	2	AUTO	X
	DISP_InputSelector04	Value 4 display	ENUM16	Static	2	AUTO	X
	DISP_DecimalPlaces04	Decimal places 4	ENUM16	Static	2	AUTO	X
	DISP_DeviceDateTimestamp	Last backup	STRING	Static	14	AUTO	
	STD_SWOptionActiveOverview	Software option overview	BIT_ENUM32	Static	4		
	MDI_ModuleAvailable	Resource available	UINT8	Static	1		
	MDI_ModuleFirmwareRevision	Software revision	UINT32	Static	4		
	DISP_Value01_0Percent	0% bargraph value 1	FLOAT	Static	4	AUTO	X
	DISP_Value01_100Percent	100% bargraph value 1	FLOAT	Static	4	AUTO	X
	DISP_Value03_0Percent	0% bargraph value 3	FLOAT	Static	4	AUTO	X
	DISP_Value03_100Percent	100% bargraph value 3	FLOAT	Static	4	AUTO	X
	SU_VolumeFlow	Volume flow unit	ENUM16	Static	2	AUTO	X
	SU_MassFlow	Mass flow unit	ENUM16	Static	2	AUTO	X
	SU_CorrVolumeFlow	Corrected volume flow unit	ENUM16	Static	2	AUTO	X
	SU_Density	Density unit	ENUM16	Static	2	AUTO	X
	SU_EnergyFlow	Energy flow unit	ENUM16	Static	2	AUTO	X
	SU_Temperature	Temperature unit	ENUM16	Static	2	AUTO	X
	SU_DynamicViscosity	Dynamic viscosity unit	ENUM16	Static	2	AUTO	X
	SU_Pressure	Pressure unit	ENUM16	Static	2	AUTO	X
	SU_Velocity	Velocity unit	ENUM16	Static	2	AUTO	X
	TIC_TotUnit	Unit totalizer	ENUM16	Static	2	AUTO	X
	TIC_TotUnit	Unit totalizer	ENUM16	Static	2	AUTO	X
	TIC_TotUnit	Unit totalizer	ENUM16	Static	2	AUTO	X

17.1.5 Transducer Block Expert

Relative Index	Name	Label	Data type	Storage Class	Size (Bytes)	MODE_BLK	Writability
11	TRDEXP_TransducerTypeVer		UINT16	Static	2		
12	TRDEXP_XdError	Transducer Error	ENUM8	Dynamic	1		
13	TRDEXP_CollectionDirectory	Collection Directory	UINT32	Static	4		
14	TRDEXP_BlockErrDesc_1	Block error description	BIT_ENUM32	Dynamic	4		
15	TRDEXP_STD_AccessCode_1	Enter access code	UINT16	Static	2	AUTO	
16	TRDEXP_STD_UserLevel_1	Access status tooling	ENUM16	Static	2		
17	TRDEXP_STD_LockingState_1	Locking status	BIT_ENUM16	Dynamic	2		
18	TRDEXP_STD_LicenseCode_1	Activate SW option	UINT32	Static	4	AUTO	X
19	TRDEXP_STD_SWOptionActiveOverview_1	Software option overview	BIT_ENUM32	Static	4		
20	TRDEXP_FLOW_PositivZeroReturn_1	Flow override	ENUM16	Static	2	AUTO	X
21	TRDEXP_SU_Temperature_1	Temperature unit	ENUM16	Static	2	AUTO	X
22	TRDEXP_VTX_DSCTemp1Max_1	Maximum value	FLOAT	Dynamic	4		
23	TRDEXP_VTX_DSCTemp1Min_1	Minimum value	FLOAT	Dynamic	4		
24	TRDEXP_VTX_DSCTemp2Max_1	Maximum value	FLOAT	Dynamic	4		
25	TRDEXP_VTX_DSCTemp2Min_1	Minimum value	FLOAT	Dynamic	4		
26	TRDEXP_VTX_ExternalPressureMax_1	Maximum value	FLOAT	Dynamic	4		
27	TRDEXP_VTX_FlowVelocityMax_1	Maximum value	FLOAT	Dynamic	4		
28	TRDEXP_VTX_GapCapacityDeltaMax_1	Maximum value	FLOAT	Dynamic	4		
29	TRDEXP_VTX_GapCapacityDeltaMin_1	Minimum value	FLOAT	Dynamic	4		
30	TRDEXP_VTX_GapCapacityMax_1	Maximum value	FLOAT	Dynamic	4		
31	TRDEXP_VTX_GapCapacityMin_1	Minimum value	FLOAT	Dynamic	4		
32	TRDEXP_VTX_MediumTemperatureMax_1	Maximum value	FLOAT	Dynamic	4		
33	TRDEXP_VTX_MediumTemperatureMin_1	Minimum value	FLOAT	Dynamic	4		
34	TRDEXP_VTX_ResetMinMaxRecords_1	Reset min/max values	ENUM16	Static	2	AUTO	X
35	TRDEXP_VTX_VortexFrequencyMax_1	Maximum value	FLOAT	Dynamic	4		
36	TRDEXP_VTX_VPATempMax_1	Maximum value	FLOAT	Dynamic	4		
37	TRDEXP_VTX_VPATempMin_1	Minimum value	FLOAT	Dynamic	4		
38	TRDEXP_FLOW_In1DampingTime_1	Flow damping	FLOAT	Static	4	AUTO	X
39	TRDEXP_VTX_ExternalInputSelector_1	External value	ENUM16	Static	2	AUTO	X
40	TRDEXP_VTX_Package_1	Sensor version	ENUM16	Static	2	AUTO	X
41	TRDEXP_SU_Pressure_1	Pressure unit	ENUM16	Static	2	AUTO	X
42	TRDEXP_SU_Velocity_1	Velocity unit	ENUM16	Static	2	AUTO	X
43	TRDEXP_SPV_ClampingVoltagePointerMax_1	Maximum value	FLOAT	Static	4	AUTO	
44	TRDEXP_SPV_TemperaturePointerMin_1	Minimum value	FLOAT	Static	4	AUTO	
45	TRDEXP_SPV_ClampingVoltagePointerMin_1	Minimum value	FLOAT	Static	4	AUTO	
46	TRDEXP_SPV_TemperaturePointerMax_1	Maximum value	FLOAT	Static	4	AUTO	
47	TRDEXP_SPV_TemperaturPointerAverage_1	Average value	FLOAT	Dynamic	4		

Relative Index	Name	Label	Data type	Storage Class	Size (Bytes)	MODE_BLK	Writability
48	TRDEXP_SPV_ClampingVoltagePointerAverage_1	Average value	FLOAT	Dynamic	4		
	TRDEXP_View1	View -1-	VIEW1	Dynamic	17		
	TRDEXP_StRev	Static Revision	UINT16	Static	2		
	TRDEXP_BlockErr	Block Error	BIT_ENUM16	Dynamic	2		
	TRDEXP_TransducerType	Transducer Type	ENUM16	Static	2		
	TRDEXP_XdError	Transducer Error	ENUM8	Dynamic	1		
	TRDEXP_BlockErrDesc_1	Block error description	BIT_ENUM32	Dynamic	4		
	STD_LockingState	Locking status	BIT_ENUM16	Dynamic	2		
	TRDEXP_View2	View -2-	VIEW2	Static	28		
	TRDEXP_StRev	Static Revision	UINT16	Static	2		
	TRDEXP_TransducerType	Transducer Type	ENUM16	Static	2		
	SU_Temperature	Temperature unit	ENUM16	Static	2	AUTO	X
	VTX_ResetMinMaxRecords	Reset min/max values	ENUM16	Static	2	AUTO	X
	VTX_ExternalInputSelector	External value	ENUM16	Static	2	AUTO	X
	VTX_Package	Sensor version	ENUM16	Static	2	AUTO	X
	SPV_ClampingVoltagePointerMax	Maximum value	FLOAT	Static	4	AUTO	
	SPV_TemperaturePointerMin	Minimum value	FLOAT	Static	4	AUTO	
	SPV_ClampingVoltagePointerMin	Minimum value	FLOAT	Static	4	AUTO	
	SPV_TemperaturePointerMax	Maximum value	FLOAT	Static	4	AUTO	
	TRDEXP_View3	View -3-	VIEW3	Dynamic	81		
	TRDEXP_StRev	Static Revision	UINT16	Static	2		
	TRDEXP_BlockErr	Block Error	BIT_ENUM16	Dynamic	2		
	TRDEXP_TransducerType	Transducer Type	ENUM16	Static	2		
	TRDEXP_XdError	Transducer Error	ENUM8	Dynamic	1		
	STD_LockingState	Locking status	BIT_ENUM16	Dynamic	2		
	VTX_DSCTemp1Max	Maximum value	FLOAT	Dynamic	4		
	VTX_DSCTemp1Min	Minimum value	FLOAT	Dynamic	4		
	VTX_DSCTemp2Max	Maximum value	FLOAT	Dynamic	4		
	VTX_DSCTemp2Min	Minimum value	FLOAT	Dynamic	4		
	VTX_ExternalPressureMax	Maximum value	FLOAT	Dynamic	4		
	VTX_FlowVelocityMax	Maximum value	FLOAT	Dynamic	4		
	VTX_GapCapacityDeltaMax	Maximum value	FLOAT	Dynamic	4		
	VTX_GapCapacityDeltaMin	Minimum value	FLOAT	Dynamic	4		
	VTX_GapCapacityMax	Maximum value	FLOAT	Dynamic	4		
	VTX_GapCapacityMin	Minimum value	FLOAT	Dynamic	4		
	VTX_MediumTemperatureMax	Maximum value	FLOAT	Dynamic	4		
	VTX_MediumTemperatureMin	Minimum value	FLOAT	Dynamic	4		
	VTX_VortexFrequencyMax	Maximum value	FLOAT	Dynamic	4		
	VTX_VPATempMax	Maximum value	FLOAT	Dynamic	4		
	VTX_VPATempMin	Minimum value	FLOAT	Dynamic	4		
	SPV_TemperaturPointerAverage	Average value	FLOAT	Dynamic	4		

Relative Index	Name	Label	Data type	Storage Class	Size (Bytes)	MODE_BLK	Writability
	SPV_ClampingVoltagePointerAverage	Average value	FLOAT	Dynamic	4		
	TRDEXP_View4	View -4-	VIEW4	Static	13		
	TRDEXP_StRev	Static Revision	UINT16	Static	2		
	TRDEXP_Strategy	Strategy	UINT16	Static	2	AUTO	X
	TRDEXP_AlertKey	Alert Key	UINT8	Static	1	AUTO	X
	TRDEXP_TransducerType	Transducer Type	ENUM16	Static	2		
	FLOW_PositivZeroReturn	Flow override	ENUM16	Static	2	AUTO	X
	FLOW_In1DampingTime	Flow damping	FLOAT	Static	4	AUTO	X

17.1.6 Transducer Block Expert Info

Relative Index	Name	Label	Data type	Storage Class	Size (Bytes)	MODE_BLK	Writability
11	TRDEXPIN_TransducerTypeVer		UINT16	Static	2		
12	TRDEXPIN_XdError	Transducer Error	ENUM8	Dynamic	1		
13	TRDEXPIN_CollectionDirectory	Collection Directory	UINT32	Static	4		
14	TRDEXPIN_BlockErrDesc_1	Block error description	BIT_ENUM32	Dynamic	4		
15	TRDEXPIN_STD_UserLevel_1	Access status tooling	ENUM16	Static	2		
16	TRDEXPIN_STD_LockingState_1	Locking status	BIT_ENUM16	Dynamic	2		
17	TRDEXPIN_STD_LicenseCode_1	Activate SW option	UINT32	Static	4	AUTO	X
18	TRDEXPIN_STD_SWOptionActiveOverview_1	Software option overview	BIT_ENUM32	Static	4		
19	TRDEXPIN_STD_GeniXMLBuildNumber_1	XML build number	UINT32	Static	4		
20	TRDEXPIN_VTX_EmergencyModeValidity_1		ENUM16	Static	2		
21	TRDEXPIN_VTX_SteamQualitySelector_1	Steam quality	ENUM16	Static	2	AUTO	X
22	TRDEXPIN_VTX_FluidSelectorSteam_1	Select steam type	ENUM16	Static	2	AUTO	X
23	TRDEXPIN_VTX_MediumSelector_1	Select medium	ENUM16	Static	2	AUTO	X
24	TRDEXPIN_VTX_FluidSelectorGas_1	Select gas type	ENUM16	Static	2	AUTO	X
25	TRDEXPIN_VTX_FluidSelectorLiquid_1	Select liquid type	ENUM16	Static	2	AUTO	X
26	TRDEXPIN_VTX_LimitReynoldsnumber_1	Reynolds number limit	FLOAT	Static	4	AUTO	X
27	TRDEXPIN_VTX_SensorEmergencyMode_1	Activate sensor emergency mode	ENUM16	Static	2	AUTO	X
28	TRDEXPIN_VTX_SteamQualityLimit_1	Steam quality limit	FLOAT	Static	4	AUTO	X
29	TRDEXPIN_VTX_ElectronicsTemperature_1	Electronic temperature	FLOAT	Dynamic	4	AUTO	X
30	TRDEXPIN_SU_Temperature_1	Temperature unit	ENUM16	Static	2	AUTO	X
31	TRDEXPIN_VTX_Voltages_1	Measured voltage 0	FLOAT	Static	4		
35	TRDEXPIN_SPV_PowerOnCounter_1	Power on	UINT32	Static	4	AUTO	
	TRDEXPIN_View1	View -1-	VIEW1	Dynamic	17		
	TRDEXPIN_StRev	Static Revision	UINT16	Static	2		
	TRDEXPIN_BlockErr	Block Error	BIT_ENUM16	Dynamic	2		
	TRDEXPIN_TransducerType	Transducer Type	ENUM16	Static	2		

Relative Index	Name	Label	Data type	Storage Class	Size (Bytes)	MODE_BLK	Writability
	TRDEXPIN_XdError	Transducer Error	ENUM8	Dynamic	1		
	TRDEXPIN_BlockErrDesc_1	Block error description	BIT_ENUM32	Dynamic	4		
	STD_LockingState	Locking status	BIT_ENUM16	Dynamic	2		
	TRDEXPIN_View2	View -2-	VIEW2	Static	46		
	TRDEXPIN_StRev	Static Revision	UINT16	Static	2		
	TRDEXPIN_TransducerType	Transducer Type	ENUM16	Static	2		
	STD_UserLevel	Access status tooling	ENUM16	Static	2		
	STD_LicenseCode	Activate SW option	UINT32	Static	4	AUTO	X
	STD_SWOptionActiveOverview	Software option overview	BIT_ENUM32	Static	4		
	STD_GeniXMLBuildNumber	XML build number	UINT32	Static	4		
	VTX_EmergencyModeValidity		ENUM16	Static	2		
	VTX_SteamQualitySelector	Steam quality	ENUM16	Static	2	AUTO	X
	VTX_FluidSelectorSteam	Select steam type	ENUM16	Static	2	AUTO	X
	VTX_MediumSelector	Select medium	ENUM16	Static	2	AUTO	X
	VTX_FluidSelectorGas	Select gas type	ENUM16	Static	2	AUTO	X
	VTX_FluidSelectorLiquid	Select liquid type	ENUM16	Static	2	AUTO	X
	VTX_LimitReynoldsnumber	Reynolds number limit	FLOAT	Static	4	AUTO	X
	VTX_SensorEmergencyMode	Activate sensor emergency mode	ENUM16	Static	2	AUTO	X
	VTX_SteamQualityLimit	Steam quality limit	FLOAT	Static	4	AUTO	X
	SU_Temperature	Temperature unit	ENUM16	Static	2	AUTO	X
	SPV_PowerOnCounter	Power on	UINT32	Static	4	AUTO	
	TRDEXPIN_View3	View -3-	VIEW3	Dynamic	21		
	TRDEXPIN_StRev	Static Revision	UINT16	Static	2		
	TRDEXPIN_BlockErr	Block Error	BIT_ENUM16	Dynamic	2		
	TRDEXPIN_TransducerType	Transducer Type	ENUM16	Static	2		
	TRDEXPIN_XdError	Transducer Error	ENUM8	Dynamic	1		
	TRDEXPIN_BlockErrDesc_1	Block error description	BIT_ENUM32	Dynamic	4		
	STD_LockingState	Locking status	BIT_ENUM16	Dynamic	2		
	VTX_ElectronicsTemperature	Electronic temperature	FLOAT	Dynamic	4	AUTO	X
	TRDEXPIN_View4	View -4-	VIEW4	Static	7		
	TRDEXPIN_StRev	Static Revision	UINT16	Static	2		
	TRDEXPIN_Strategy	Strategy	UINT16	Static	2	AUTO	X
	TRDEXPIN_AlertKey	Alert Key	UINT8	Static	1	AUTO	X
	TRDEXPIN_TransducerType	Transducer Type	ENUM16	Static	2		

17.1.7 Transducer Block Heartbeat

Relative Index	Name	Label	Data type	Storage Class	Size (Bytes)	MODE_BLK	Writability
11	TRDHBT_TransducerTypeVer		UINT16	Static	2		
12	TRDHBT_XdError	Transducer Error	ENUM8	Dynamic	1		
13	TRDHBT_CollectionDirectory	Collection Directory	UINT32	Static	4		
14	TRDHBT_BlockErrDesc_1	Block error description	BIT_ENUM32	Dynamic	4		
15	TRDHBT_STD_UserLevel_1	Access status tooling	ENUM16	Static	2		
16	TRDHBT_STD_LockingState_1	Locking status	BIT_ENUM16	Dynamic	2		
17	TRDHBT_STD_SWOptionActiveOverview_1	Software option overview	BIT_ENUM32	Static	4		
18	TRDHBT_HBT_VerificationVersion_1	Verification version	UINT8	Static	1		
19	TRDHBT_HBT_PerformVerification_1	Start verification	ENUM16	Static	2	AUTO	X
20	TRDHBT_HBT_VerificationDateTime_1	Date/time	STRING	Static	20		
21	TRDHBT_HBT_VerificationCounter_1	Verification ID	UINT16	Static	2	AUTO	
22	TRDHBT_HBT_VerificationOverallResult_1	Overall result	ENUM16	Static	2		
23	TRDHBT_HBT_VerificationSensorResult_1	Sensor	ENUM16	Static	2		
24	TRDHBT_HBT_VerificationSensElectronicResult_1	Pre-amplifier module	ENUM16	Static	2		
25	TRDHBT_HBT_VerificationInputOutputResult_1	I/O module	ENUM16	Static	2		
26	TRDHBT_HBT_OperationHours_1	Operating time	STRING	Static	14		
27	TRDHBT_HBT_VerificationStatus_1	Status	ENUM16	Dynamic	2		
28	TRDHBT_HBT_ExternalDeviceInfo_1	External device information	STRING	Static	32	AUTO	X
29	TRDHBT_HBT_VerificationMode_1	Verification mode	ENUM16	Static	2	AUTO	X
30	TRDHBT_HBT_MeasuredValueOut_1	Measured values	FLOAT	Static	4	AUTO	X
31	TRDHBT_HBT_SetValueOut_1	Output values	FLOAT	Static	4		
32	TRDHBT_Dev_CustomerName_1	Plant operator	STRING	Static	32	AUTO	X
33	TRDHBT_Dev_PlantSection_1	Location	STRING	Static	32	AUTO	X
34	TRDHBT_SU_MassFlow_1	Mass flow unit	ENUM16	Static	2	AUTO	X
35	TRDHBT_SU_Temperature_1	Temperature unit	ENUM16	Static	2	AUTO	X
36	TRDHBT_SU_VolumeFlow_1	Volume flow unit	ENUM16	Static	2	AUTO	X
37	TRDHBT_HBT_VerificationMainElectronicResult_1	Main electronic module	ENUM16	Static	2		
	TRDHBT_View1	View -1-	VIEW1	Dynamic	19		
	TRDHBT_StRev	Static Revision	UINT16	Static	2		
	TRDHBT_BlockErr	Block Error	BIT_ENUM16	Dynamic	2		
	TRDHBT_TransducerType	Transducer Type	ENUM16	Static	2		
	TRDHBT_XdError	Transducer Error	ENUM8	Dynamic	1		
	TRDHBT_BlockErrDesc_1	Block error description	BIT_ENUM32	Dynamic	4		
	STD_LockingState	Locking status	BIT_ENUM16	Dynamic	2		

Relative Index	Name	Label	Data type	Storage Class	Size (Bytes)	MODE_BLK	Writability
	HBT_VerificationStatus	Status	ENUM16	Dynamic	2		
	TRDHBT_View2	View -2-	VIEW2	Static	75		
	TRDHBT_StRev	Static Revision	UINT16	Static	2		
	TRDHBT_TransducerType	Transducer Type	ENUM16	Static	2		
	STD_UserLevel	Access status tooling	ENUM16	Static	2		
	STD_SWOptionActiveOverview	Software option overview	BIT_ENUM32	Static	4		
	HBT_VerificationVersion	Verification version	UINT8	Static	1		
	HBT_PerformVerification	Start verification	ENUM16	Static	2	AUTO	X
	HBT_VerificationDateTime	Date/time	STRING	Static	20		
	HBT_VerificationCounter	Verification ID	UINT16	Static	2	AUTO	
	HBT_VerificationOverallResult	Overall result	ENUM16	Static	2		
	HBT_VerificationSensorResult	Sensor	ENUM16	Static	2		
	HBT_VerificationSensElectronicResult	Pre-amplifier module	ENUM16	Static	2		
	HBT_VerificationInputOutputResult	I/O module	ENUM16	Static	2		
	HBT_OperationHours	Operating time	STRING	Static	14		
	HBT_VerificationMode	Verification mode	ENUM16	Static	2	AUTO	X
	HBT_MeasuredValueOut	Measured values	FLOAT	Static	4	AUTO	X
	HBT_SetValueOut	Output values	FLOAT	Static	4		
	SU_MassFlow	Mass flow unit	ENUM16	Static	2	AUTO	X
	SU_Temperature	Temperature unit	ENUM16	Static	2	AUTO	X
	SU_VolumeFlow	Volume flow unit	ENUM16	Static	2	AUTO	X
	HBT_VerificationMainElectronicResult	Main electronic module	ENUM16	Static	2		
	TRDHBT_View3	View -3-	VIEW3	Dynamic	11		
	TRDHBT_StRev	Static Revision	UINT16	Static	2		
	TRDHBT_BlockErr	Block Error	BIT_ENUM16	Dynamic	2		
	TRDHBT_TransducerType	Transducer Type	ENUM16	Static	2		
	TRDHBT_XdError	Transducer Error	ENUM8	Dynamic	1		
	TRDHBT_View4	View -4-	VIEW4	Static	103		
	TRDHBT_StRev	Static Revision	UINT16	Static	2		
	TRDHBT_Strategy	Strategy	UINT16	Static	2	AUTO	X
	TRDHBT_AlertKey	Alert Key	UINT8	Static	1	AUTO	X
	TRDHBT_TransducerType	Transducer Type	ENUM16	Static	2		
	HBT_ExternalDeviceInfo	External device information	STRING	Static	32	AUTO	X
	Dev_CustomerName	Plant operator	STRING	Static	32	AUTO	X
	Dev_PlantSection	Location	STRING	Static	32	AUTO	X

17.1.8 Transducer Block Heartbeat Results 1

Relative Index	Name	Label	Data type	Storage Class	Size (Bytes)	MODE_BLK	Writability
11	TRDHBTR1_TransducerTypeVer		UINT16	Static	2		
12	TRDHBTR1_XdError	Transducer Error	ENUM8	Dynamic	1		
13	TRDHBTR1_CollectionDirectory	Collection Directory	UINT32	Static	4		
14	TRDHBTR1_BlockErrDesc_1	Block error description	BIT_ENUM32	Dynamic	4		
15	TRDHBTR1_HBTR_VerificationDateTime_1	Date/time	STRING	Static	20		
16	TRDHBTR1_HBTR_VerificationCounter_1	Verification ID	UINT16	Static	2		
17	TRDHBTR1_HBTR_OperationHours_1	Operating time	STRING	Static	14		
18	TRDHBTR1_HBTR_VerificationOverallResult_1	Overall result	ENUM16	Static	2		
19	TRDHBTR1_HBTR_VerificationSensorResult_1	Sensor	ENUM16	Static	2		
20	TRDHBTR1_HBTR_VerificationSensElectronicResult_1	Pre-amplifier module	ENUM16	Static	2		
21	TRDHBTR1_HBTR_VerificationInputOutputResult_1	I/O module	ENUM16	Static	2		
22	TRDHBTR1_HBTR_VerificationSupplyVoltageResult_1	Supply voltage	ENUM16	Static	2		
23	TRDHBTR1_HBTR_ExternalDeviceInfo_1	External device information	STRING	Static	32		
24	TRDHBTR1_HBTR_InputOutputSlot2Type_1	Slot 2 Modul Type	ENUM16	Static	2		
25	TRDHBTR1_HBTR_InputOutputSlot2Data1Value_1	Output 2 actual value 1	FLOAT	Static	4		
26	TRDHBTR1_HBTR_InputOutputSlot2Data1Result_1	Output 2	ENUM16	Static	2		
27	TRDHBTR1_HBTR_ExternVerificationFlags_1	External verification flags	BIT_ENUM32	Static	4		
28	TRDHBTR1_HBTR_VerificationDateTime_2	Date/time	STRING	Static	20		
29	TRDHBTR1_HBTR_VerificationCounter_2	Verification ID	UINT16	Static	2		
30	TRDHBTR1_HBTR_OperationHours_2	Operating time	STRING	Static	14		
31	TRDHBTR1_HBTR_VerificationOverallResult_2	Overall result	ENUM16	Static	2		
32	TRDHBTR1_HBTR_VerificationSensorResult_2	Sensor	ENUM16	Static	2		
33	TRDHBTR1_HBTR_VerificationSensElectronicResult_2	Pre-amplifier module	ENUM16	Static	2		
34	TRDHBTR1_HBTR_VerificationInputOutputResult_2	I/O module	ENUM16	Static	2		
35	TRDHBTR1_HBTR_VerificationSupplyVoltageResult_2	Supply voltage	ENUM16	Static	2		
36	TRDHBTR1_HBTR_ExternalDeviceInfo_2	External device information	STRING	Static	32		
37	TRDHBTR1_HBTR_InputOutputSlot2Type_2	Slot 2 Modul Type	ENUM16	Static	2		
38	TRDHBTR1_HBTR_InputOutputSlot2Data1Value_2	Output 2 actual value 1	FLOAT	Static	4		
39	TRDHBTR1_HBTR_InputOutputSlot2Data1Result_2	Output 2	ENUM16	Static	2		
40	TRDHBTR1_HBTR_ExternVerificationFlags_2	External verification flags	BIT_ENUM32	Static	4		
41	TRDHBTR1_STD_LockingState_1	Locking status	BIT_ENUM16	Dynamic	2		

Relative Index	Name	Label	Data type	Storage Class	Size (Bytes)	MODE_BLK	Writability
42	TRDHBTR1_STD_UserLevel_1	Access status tooling	ENUM16	Static	2		
43	TRDHBTR1_SU_VolumeFlow_1	Volume flow unit	ENUM16	Static	2	AUTO	X
44	TRDHBTR1_SU_MassFlow_1	Mass flow unit	ENUM16	Static	2	AUTO	X
45	TRDHBTR1_SU_Density_1	Density unit	ENUM16	Static	2	AUTO	X
46	TRDHBTR1_SU_Temperature_1	Temperature unit	ENUM16	Static	2	AUTO	X
47	TRDHBTR1_STD_SWOptionActiveOverview_1	Software option overview	BIT_ENUM32	Static	4		
48	TRDHBTR1_HBTR_DSCLeakageC0_2	Sensor leakage current	FLOAT	Static	4		
49	TRDHBTR1_HBTR_DSCLeakageC0_1	Sensor leakage current	FLOAT	Static	4		
50	TRDHBTR1_HBTR_DSCTemperaturePT1_1	DSC sensor temperature PT1	FLOAT	Static	4		
51	TRDHBTR1_HBTR_DSCTemperaturePT2_1	DSC sensor temperature PT2	FLOAT	Static	4		
52	TRDHBTR1_HBTR_FrequencyReferenceDrift_1	Quartz reference frequency drift	FLOAT	Static	4		
53	TRDHBTR1_HBTR_GapCapacity_1	Gap capacity	FLOAT	Static	4		
54	TRDHBTR1_HBTR_GapCapacityDelta_1	Gap capacity difference	FLOAT	Static	4		
55	TRDHBTR1_HBTR_OverallRefCapacity_1	DSC sensor reference capacity	FLOAT	Static	4		
56	TRDHBTR1_HBTR_Package_1	Sensor version	ENUM16	Static	2		
57	TRDHBTR1_HBTR_TemperatureRefPT1_1	Temperature reference 1	FLOAT	Static	4		
58	TRDHBTR1_HBTR_TemperatureRefPT2_1	Temperature reference 2	FLOAT	Static	4		
59	TRDHBTR1_HBTR_VerificationDSCMeasResult_1	DSC sensor measuring path	ENUM16	Static	2		
60	TRDHBTR1_HBTR_VerificationDSCReferenceResult_1	DSC sensor reference	ENUM16	Static	2		
61	TRDHBTR1_HBTR_VerificationDSCSensorResult_1	DSC sensor	ENUM16	Static	2		
62	TRDHBTR1_HBTR_VerificationFreqRefDriftResult_1	Reference frequency drift	ENUM16	Static	2		
63	TRDHBTR1_HBTR_VerificationPTSensorResult_1	Temperature sensor	ENUM16	Static	2		
64	TRDHBTR1_HBTR_VerificationTempMeasResult_1	Temperature measuring path	ENUM16	Static	2		
65	TRDHBTR1_HBTR_DSCTemperaturePT1_2	DSC sensor temperature PT1	FLOAT	Static	4		
66	TRDHBTR1_HBTR_DSCTemperaturePT2_2	DSC sensor temperature PT2	FLOAT	Static	4		

Relative Index	Name	Label	Data type	Storage Class	Size (Bytes)	MODE_BLK	Writability
67	TRDHBTR1_HBTR_FrequencyReferenceDrift_2	Quartz reference frequency drift	FLOAT	Static	4		
68	TRDHBTR1_HBTR_GapCapacity_2	Gap capacity	FLOAT	Static	4		
69	TRDHBTR1_HBTR_GapCapacityDelta_2	Gap capacity difference	FLOAT	Static	4		
70	TRDHBTR1_HBTR_OverallRefCapacity_2	DSC sensor reference capacity	FLOAT	Static	4		
71	TRDHBTR1_HBTR_Package_2	Sensor version	ENUM16	Static	2		
72	TRDHBTR1_HBTR_TemperatureRefPT1_2	Temperature reference 1	FLOAT	Static	4		
73	TRDHBTR1_HBTR_TemperatureRefPT2_2	Temperature reference 2	FLOAT	Static	4		
74	TRDHBTR1_HBTR_VerificationDSCMeasResult_2	DSC sensor measuring path	ENUM16	Static	2		
75	TRDHBTR1_HBTR_VerificationDSCReferenceResult_2	DSC sensor reference	ENUM16	Static	2		
76	TRDHBTR1_HBTR_VerificationDSCSensorResult_2	DSC sensor	ENUM16	Static	2		
77	TRDHBTR1_HBTR_VerificationFreqRefDriftResult_2	Reference frequency drift	ENUM16	Static	2		
78	TRDHBTR1_HBTR_VerificationPTSensorResult_2	Temperature sensor	ENUM16	Static	2		
79	TRDHBTR1_HBTR_VerificationTempMeasResult_2	Temperature measuring path	ENUM16	Static	2		
	TRDHBTR1_View1	View -1-	VIEW1	Dynamic	17		
	TRDHBTR1_StRev	Static Revision	UINT16	Static	2		
	TRDHBTR1_BlockErr	Block Error	BIT_ENUM16	Dynamic	2		
	TRDHBTR1_TransducerType	Transducer Type	ENUM16	Static	2		
	TRDHBTR1_XdError	Transducer Error	ENUM8	Dynamic	1		
	TRDHBTR1_BlockErrDesc_1	Block error description	BIT_ENUM32	Dynamic	4		
	STD_LockingState	Locking status	BIT_ENUM16	Dynamic	2		
	TRDHBTR1_View2	View -2-	VIEW2	Static	112		
	TRDHBTR1_StRev	Static Revision	UINT16	Static	2		
	TRDHBTR1_TransducerType	Transducer Type	ENUM16	Static	2		
	HBTR_VerificationDateTime	Date/time	STRING	Static	20		
	HBTR_VerificationCounter	Verification ID	UINT16	Static	2		
	HBTR_OperationHours	Operating time	STRING	Static	14		
	HBTR_VerificationOverallResult	Overall result	ENUM16	Static	2		
	HBTR_VerificationSensorResult	Sensor	ENUM16	Static	2		
	HBTR_VerificationSensElectronicResult	Pre-amplifier module	ENUM16	Static	2		
	HBTR_VerificationInputOutputResult	I/O module	ENUM16	Static	2		
	HBTR_VerificationSupplyVoltageResult	Supply voltage	ENUM16	Static	2		

Relative Index	Name	Label	Data type	Storage Class	Size (Bytes)	MODE_BLK	Writability
	HBTR_ExternVerificationFlags	External verification flags	BIT_ENUM32	Static	4		
	HBTR_VerificationDateTime	Date/time	STRING	Static	20		
	HBTR_VerificationCounter	Verification ID	UINT16	Static	2		
	HBTR_OperationHours	Operating time	STRING	Static	14		
	HBTR_VerificationOverallResult	Overall result	ENUM16	Static	2		
	HBTR_VerificationSensorResult	Sensor	ENUM16	Static	2		
	HBTR_VerificationSensElectronicResult	Pre-amplifier module	ENUM16	Static	2		
	HBTR_VerificationInputOutputResult	I/O module	ENUM16	Static	2		
	HBTR_VerificationSupplyVoltageResult	Supply voltage	ENUM16	Static	2		
	HBTR_ExternVerificationFlags	External verification flags	BIT_ENUM32	Static	4		
	HBTR_VerificationDSCMeasResult	DSC sensor measuring path	ENUM16	Static	2		
	HBTR_VerificationDSCReferenceResult	DSC sensor reference	ENUM16	Static	2		
	HBTR_VerificationDSCMeasResult	DSC sensor measuring path	ENUM16	Static	2		
	HBTR_VerificationDSCReferenceResult	DSC sensor reference	ENUM16	Static	2		
	TRDHBTR1_View3	View -3-	VIEW3	Dynamic	13		
	TRDHBTR1_StRev	Static Revision	UINT16	Static	2		
	TRDHBTR1_BlockErr	Block Error	BIT_ENUM16	Dynamic	2		
	TRDHBTR1_TransducerType	Transducer Type	ENUM16	Static	2		
	TRDHBTR1_XdError	Transducer Error	ENUM8	Dynamic	1		
	STD_LockingState	Locking status	BIT_ENUM16	Dynamic	2		
	TRDHBTR1_View4	View -4-	VIEW4	Static	95		
	TRDHBTR1_StRev	Static Revision	UINT16	Static	2		
	TRDHBTR1_Strategy	Strategy	UINT16	Static	2	AUTO	X
	TRDHBTR1_AlertKey	Alert Key	UINT8	Static	1	AUTO	X
	TRDHBTR1_TransducerType	Transducer Type	ENUM16	Static	2		
	HBTR_ExternalDeviceInfo	External device information	STRING	Static	32		
	HBTR_InputOutputSlot2Type	Slot 2 Modul Type	ENUM16	Static	2		
	HBTR_InputOutputSlot2Data1Value	Output 2 actual value 1	FLOAT	Static	4		
	HBTR_InputOutputSlot2Data1Result	Output 2	ENUM16	Static	2		
	HBTR_ExternalDeviceInfo	External device information	STRING	Static	32		
	HBTR_InputOutputSlot2Type	Slot 2 Modul Type	ENUM16	Static	2		

Relative Index	Name	Label	Data type	Storage Class	Size (Bytes)	MODE_BLK	Writability
	HBTR_InputOutputSlot2Data1Value	Output 2 actual value 1	FLOAT	Static	4		
	HBTR_InputOutputSlot2Data1Result	Output 2	ENUM16	Static	2		
	STD_UserLevel	Access status tooling	ENUM16	Static	2		
	SU_Temperature	Temperature unit	ENUM16	Static	2	AUTO	X
	STD_SWOptionActiveOverview	Software option overview	BIT_ENUM32	Static	4		
	TRDHBTR1_View4_2	View -4-1	VIEW4	Static	94		
	TRDHBTR1_StRev	Static Revision	UINT16	Static	2		
	HBTR_DSCLeakageC0	Sensor leakage current	FLOAT	Static	4		
	HBTR_DSCLeakageC0	Sensor leakage current	FLOAT	Static	4		
	HBTR_DSCTemperaturePT1	DSC sensor temperature PT1	FLOAT	Static	4		
	HBTR_DSCTemperaturePT2	DSC sensor temperature PT2	FLOAT	Static	4		
	HBTR_FrequencyReferenceDrift	Quartz reference frequency drift	FLOAT	Static	4		
	HBTR_GapCapacity	Gap capacity	FLOAT	Static	4		
	HBTR_GapCapacityDelta	Gap capacity difference	FLOAT	Static	4		
	HBTR_OverallRefCapacity	DSC sensor reference capacity	FLOAT	Static	4		
	HBTR_Package	Sensor version	ENUM16	Static	2		
	HBTR_TemperatureRefPT1	Temperature reference 1	FLOAT	Static	4		
	HBTR_TemperatureRefPT2	Temperature reference 2	FLOAT	Static	4		
	HBTR_VerificationDSCSensorResult	DSC sensor	ENUM16	Static	2		
	HBTR_VerificationFreqRefDriftResult	Reference frequency drift	ENUM16	Static	2		
	HBTR_VerificationPTSensorResult	Temperature sensor	ENUM16	Static	2		
	HBTR_VerificationTempMeasResult	Temperature measuring path	ENUM16	Static	2		
	HBTR_DSCTemperaturePT1	DSC sensor temperature PT1	FLOAT	Static	4		
	HBTR_DSCTemperaturePT2	DSC sensor temperature PT2	FLOAT	Static	4		
	HBTR_FrequencyReferenceDrift	Quartz reference frequency drift	FLOAT	Static	4		
	HBTR_GapCapacity	Gap capacity	FLOAT	Static	4		

Relative Index	Name	Label	Data type	Storage Class	Size (Bytes)	MODE_BLK	Writability
	HBTR_GapCapacityDelta	Gap capacity difference	FLOAT	Static	4		
	HBTR_OverallRefCapacity	DSC sensor reference capacity	FLOAT	Static	4		
	HBTR_Package	Sensor version	ENUM16	Static	2		
	HBTR_TemperatureRefPT1	Temperature reference 1	FLOAT	Static	4		
	HBTR_TemperatureRefPT2	Temperature reference 2	FLOAT	Static	4		
	HBTR_VerificationDSCSensorResult	DSC sensor	ENUM16	Static	2		
	HBTR_VerificationFreqRefDriftResult	Reference frequency drift	ENUM16	Static	2		
	HBTR_VerificationPTSensorResult	Temperature sensor	ENUM16	Static	2		
	HBTR_VerificationTempMeasResult	Temperature measuring path	ENUM16	Static	2		

17.1.9 Transducer Block Heartbeat Results 2

Relative Index	Name	Label	Data type	Storage Class	Size (Bytes)	MODE_BLK	Writability
11	TRDHBTR2_TransducerTypeVer		UINT16	Static	2		
12	TRDHBTR2_XdError	Transducer Error	ENUM8	Dynamic	1		
13	TRDHBTR2_CollectionDirectory	Collection Directory	UINT32	Static	4		
14	TRDHBTR2_BlockErrDesc_1	Block error description	BIT_ENUM32	Dynamic	4		
15	TRDHBTR2_HBTR_VerificationDateTime_3	Date/time	STRING	Static	20		
16	TRDHBTR2_HBTR_VerificationCounter_3	Verification ID	UINT16	Static	2		
17	TRDHBTR2_HBTR_OperationHours_3	Operating time	STRING	Static	14		
18	TRDHBTR2_HBTR_VerificationOverallResult_3	Overall result	ENUM16	Static	2		
19	TRDHBTR2_HBTR_VerificationSensorResult_3	Sensor	ENUM16	Static	2		
20	TRDHBTR2_HBTR_VerificationSensElectronicResult_3	Pre-amplifier module	ENUM16	Static	2		
21	TRDHBTR2_HBTR_VerificationInputOutputResult_3	I/O module	ENUM16	Static	2		
22	TRDHBTR2_HBTR_VerificationSupplyVoltageResult_3	Supply voltage	ENUM16	Static	2		
23	TRDHBTR2_HBTR_ExternalDeviceInfo_3	External device information	STRING	Static	32		
24	TRDHBTR2_HBTR_InputOutputSlot2Type_3	Slot 2 Modul Type	ENUM16	Static	2		
25	TRDHBTR2_HBTR_InputOutputSlot2Data1Value_3	Output 2 actual value 1	FLOAT	Static	4		
26	TRDHBTR2_HBTR_InputOutputSlot2Data1Result_3	Output 2	ENUM16	Static	2		
27	TRDHBTR2_HBTR_ExternVerificationFlags_3	External verification flags	BIT_ENUM32	Static	4		
28	TRDHBTR2_HBTR_VerificationDateTime_4	Date/time	STRING	Static	20		

Relative Index	Name	Label	Data type	Storage Class	Size (Bytes)	MODE_BLK	Writability
29	TRDHBTR2_HBTR_VerificationCounter_4	Verification ID	UINT16	Static	2		
30	TRDHBTR2_HBTR_OperationHours_4	Operating time	STRING	Static	14		
31	TRDHBTR2_HBTR_VerificationOverallResult_4	Overall result	ENUM16	Static	2		
32	TRDHBTR2_HBTR_VerificationSensorResult_4	Sensor	ENUM16	Static	2		
33	TRDHBTR2_HBTR_VerificationSensElectronicResult_4	Pre-amplifier module	ENUM16	Static	2		
34	TRDHBTR2_HBTR_VerificationInputOutputResult_4	I/O module	ENUM16	Static	2		
35	TRDHBTR2_HBTR_VerificationSupplyVoltageResult_4	Supply voltage	ENUM16	Static	2		
36	TRDHBTR2_HBTR_ExternalDeviceInfo_4	External device information	STRING	Static	32		
37	TRDHBTR2_HBTR_InputOutputSlot2Type_4	Slot 2 Modul Type	ENUM16	Static	2		
38	TRDHBTR2_HBTR_InputOutputSlot2Data1Value_4	Output 2 actual value 1	FLOAT	Static	4		
39	TRDHBTR2_HBTR_InputOutputSlot2Data1Result_4	Output 2	ENUM16	Static	2		
40	TRDHBTR2_HBTR_ExternVerificationFlags_4	External verification flags	BIT_ENUM32	Static	4		
41	TRDHBTR2_STD_LockingState_1	Locking status	BIT_ENUM16	Dynamic	2		
42	TRDHBTR2_STD_UserLevel_1	Access status tooling	ENUM16	Static	2		
43	TRDHBTR2_SU_VolumeFlow_1	Volume flow unit	ENUM16	Static	2	AUTO	X
44	TRDHBTR2_SU_MassFlow_1	Mass flow unit	ENUM16	Static	2	AUTO	X
45	TRDHBTR2_SU_Density_1	Density unit	ENUM16	Static	2	AUTO	X
46	TRDHBTR2_SU_Temperature_1	Temperature unit	ENUM16	Static	2	AUTO	X
47	TRDHBTR2_STD_SWOptionActiveOverview_1	Software option overview	BIT_ENUM32	Static	4		
48	TRDHBTR2_HBTR_DSCLeakageC0_3	Sensor leakage current	FLOAT	Static	4		
49	TRDHBTR2_HBTR_DSCTemperaturePT1_3	DSC sensor temperature PT1	FLOAT	Static	4		
50	TRDHBTR2_HBTR_DSCTemperaturePT2_3	DSC sensor temperature PT2	FLOAT	Static	4		
51	TRDHBTR2_HBTR_FrequencyReferenceDrift_3	Quartz reference frequency drift	FLOAT	Static	4		
52	TRDHBTR2_HBTR_GapCapacity_3	Gap capacity	FLOAT	Static	4		
53	TRDHBTR2_HBTR_GapCapacityDelta_3	Gap capacity difference	FLOAT	Static	4		
54	TRDHBTR2_HBTR_OverallRefCapacity_3	DSC sensor reference capacity	FLOAT	Static	4		
55	TRDHBTR2_HBTR_Package_3	Sensor version	ENUM16	Static	2		
56	TRDHBTR2_HBTR_TemperatureRefPT1_3	Temperature reference 1	FLOAT	Static	4		

Relative Index	Name	Label	Data type	Storage Class	Size (Bytes)	MODE_BLK	Writability
57	TRDHBTR2_HBTR_TemperatureRefPT2_3	Temperature reference 2	FLOAT	Static	4		
58	TRDHBTR2_HBTR_VerificationDSCMeasResult_3	DSC sensor measuring path	ENUM16	Static	2		
59	TRDHBTR2_HBTR_VerificationDSCReferenceResult_3	DSC sensor reference	ENUM16	Static	2		
60	TRDHBTR2_HBTR_VerificationDSCSensorResult_3	DSC sensor	ENUM16	Static	2		
61	TRDHBTR2_HBTR_VerificationFreqRefDriftResult_3	Reference frequency drift	ENUM16	Static	2		
62	TRDHBTR2_HBTR_VerificationPTSensorResult_3	Temperature sensor	ENUM16	Static	2		
63	TRDHBTR2_HBTR_VerificationTempMeasResult_3	Temperature measuring path	ENUM16	Static	2		
64	TRDHBTR2_HBTR_DSCLeakageCO_4	Sensor leakage current	FLOAT	Static	4		
65	TRDHBTR2_HBTR_DSCTemperaturePT1_4	DSC sensor temperature PT1	FLOAT	Static	4		
66	TRDHBTR2_HBTR_DSCTemperaturePT2_4	DSC sensor temperature PT2	FLOAT	Static	4		
67	TRDHBTR2_HBTR_FrequencyReferenceDrift_4	Quartz reference frequency drift	FLOAT	Static	4		
68	TRDHBTR2_HBTR_GapCapacity_4	Gap capacity	FLOAT	Static	4		
69	TRDHBTR2_HBTR_GapCapacityDelta_4	Gap capacity difference	FLOAT	Static	4		
70	TRDHBTR2_HBTR_OverallRefCapacity_4	DSC sensor reference capacity	FLOAT	Static	4		
71	TRDHBTR2_HBTR_Package_4	Sensor version	ENUM16	Static	2		
72	TRDHBTR2_HBTR_TemperatureRefPT1_4	Temperature reference 1	FLOAT	Static	4		
73	TRDHBTR2_HBTR_TemperatureRefPT2_4	Temperature reference 2	FLOAT	Static	4		
74	TRDHBTR2_HBTR_VerificationDSCMeasResult_4	DSC sensor measuring path	ENUM16	Static	2		
75	TRDHBTR2_HBTR_VerificationDSCReferenceResult_4	DSC sensor reference	ENUM16	Static	2		
76	TRDHBTR2_HBTR_VerificationDSCSensorResult_4	DSC sensor	ENUM16	Static	2		
77	TRDHBTR2_HBTR_VerificationFreqRefDriftResult_4	Reference frequency drift	ENUM16	Static	2		
78	TRDHBTR2_HBTR_VerificationPTSensorResult_4	Temperature sensor	ENUM16	Static	2		
79	TRDHBTR2_HBTR_VerificationTempMeasResult_4	Temperature measuring path	ENUM16	Static	2		
	TRDHBTR2_View1	View -1-	VIEW1	Dynamic	17		
	TRDHBTR2_StRev	Static Revision	UINT16	Static	2		
	TRDHBTR2_BlockErr	Block Error	BIT_ENUM16	Dynamic	2		
	TRDHBTR2_TransducerType	Transducer Type	ENUM16	Static	2		

Relative Index	Name	Label	Data type	Storage Class	Size (Bytes)	MODE_BLK	Writability
	TRDHBTR2_XdError	Transducer Error	ENUM8	Dynamic	1		
	TRDHBTR2_BlockErrDesc_1	Block error description	BIT_ENUM32	Dynamic	4		
	STD_LockingState	Locking status	BIT_ENUM16	Dynamic	2		
	TRDHBTR2_View2	View -2-	VIEW2	Static	112		
	TRDHBTR2_StRev	Static Revision	UINT16	Static	2		
	TRDHBTR2_TransducerType	Transducer Type	ENUM16	Static	2		
	HBTR_VerificationDateTime	Date/time	STRING	Static	20		
	HBTR_VerificationCounter	Verification ID	UINT16	Static	2		
	HBTR_OperationHours	Operating time	STRING	Static	14		
	HBTR_VerificationOverallResult	Overall result	ENUM16	Static	2		
	HBTR_VerificationSensorResult	Sensor	ENUM16	Static	2		
	HBTR_VerificationSensElectronicResult	Pre-amplifier module	ENUM16	Static	2		
	HBTR_VerificationInputOutputResult	I/O module	ENUM16	Static	2		
	HBTR_VerificationSupplyVoltageResult	Supply voltage	ENUM16	Static	2		
	HBTR_ExternVerificationFlags	External verification flags	BIT_ENUM32	Static	4		
	HBTR_VerificationDateTime	Date/time	STRING	Static	20		
	HBTR_VerificationCounter	Verification ID	UINT16	Static	2		
	HBTR_OperationHours	Operating time	STRING	Static	14		
	HBTR_VerificationOverallResult	Overall result	ENUM16	Static	2		
	HBTR_VerificationSensorResult	Sensor	ENUM16	Static	2		
	HBTR_VerificationSensElectronicResult	Pre-amplifier module	ENUM16	Static	2		
	HBTR_VerificationInputOutputResult	I/O module	ENUM16	Static	2		
	HBTR_VerificationSupplyVoltageResult	Supply voltage	ENUM16	Static	2		
	HBTR_ExternVerificationFlags	External verification flags	BIT_ENUM32	Static	4		
	HBTR_VerificationDSCMeasResult	DSC sensor measuring path	ENUM16	Static	2		
	HBTR_VerificationDSCReferenceResult	DSC sensor reference	ENUM16	Static	2		
	HBTR_VerificationDSCMeasResult	DSC sensor measuring path	ENUM16	Static	2		
	HBTR_VerificationDSCReferenceResult	DSC sensor reference	ENUM16	Static	2		
	TRDHBTR2_View3	View -3-	VIEW3	Dynamic	13		
	TRDHBTR2_StRev	Static Revision	UINT16	Static	2		
	TRDHBTR2_BlockErr	Block Error	BIT_ENUM16	Dynamic	2		
	TRDHBTR2_TransducerType	Transducer Type	ENUM16	Static	2		
	TRDHBTR2_XdError	Transducer Error	ENUM8	Dynamic	1		

Relative Index	Name	Label	Data type	Storage Class	Size (Bytes)	MODE_BLK	Writability
	STD_LockingState	Locking status	BIT_ENUM16	Dynamic	2		
	TRDHBTR2_View4	View -4-	VIEW4	Static	95		
	TRDHBTR2_StRev	Static Revision	UINT16	Static	2		
	TRDHBTR2_Strategy	Strategy	UINT16	Static	2	AUTO	X
	TRDHBTR2_AlertKey	Alert Key	UINT8	Static	1	AUTO	X
	TRDHBTR2_TransducerType	Transducer Type	ENUM16	Static	2		
	HBTR_ExternalDeviceInfo	External device information	STRING	Static	32		
	HBTR_InputOutputSlot2Type	Slot 2 Modul Type	ENUM16	Static	2		
	HBTR_InputOutputSlot2Data1Value	Output 2 actual value 1	FLOAT	Static	4		
	HBTR_InputOutputSlot2Data1Result	Output 2	ENUM16	Static	2		
	HBTR_ExternalDeviceInfo	External device information	STRING	Static	32		
	HBTR_InputOutputSlot2Type	Slot 2 Modul Type	ENUM16	Static	2		
	HBTR_InputOutputSlot2Data1Value	Output 2 actual value 1	FLOAT	Static	4		
	HBTR_InputOutputSlot2Data1Result	Output 2	ENUM16	Static	2		
	STD_UserLevel	Access status tooling	ENUM16	Static	2		
	SU_Temperature	Temperature unit	ENUM16	Static	2	AUTO	X
	STD_SWOptionActiveOverview	Software option overview	BIT_ENUM32	Static	4		
	TRDHBTR2_View4_2	View -4-1	VIEW4	Static	94		
	TRDHBTR2_StRev	Static Revision	UINT16	Static	2		
	HBTR_DSCLeakageC0	Sensor leakage current	FLOAT	Static	4		
	HBTR_DSCTemperaturePT1	DSC sensor temperature PT1	FLOAT	Static	4		
	HBTR_DSCTemperaturePT2	DSC sensor temperature PT2	FLOAT	Static	4		
	HBTR_FrequencyReferenceDrift	Quartz reference frequency drift	FLOAT	Static	4		
	HBTR_GapCapacity	Gap capacity	FLOAT	Static	4		
	HBTR_GapCapacityDelta	Gap capacity difference	FLOAT	Static	4		
	HBTR_OverallRefCapacity	DSC sensor reference capacity	FLOAT	Static	4		
	HBTR_Package	Sensor version	ENUM16	Static	2		
	HBTR_TemperatureRefPT1	Temperature reference 1	FLOAT	Static	4		

Relative Index	Name	Label	Data type	Storage Class	Size (Bytes)	MODE_BLK	Writability
	HBTR_TemperatureRefPT2	Temperature reference 2	FLOAT	Static	4		
	HBTR_VerificationDSCSensorResult	DSC sensor	ENUM16	Static	2		
	HBTR_VerificationFreqRefDriftResult	Reference frequency drift	ENUM16	Static	2		
	HBTR_VerificationPTSensorResult	Temperature sensor	ENUM16	Static	2		
	HBTR_VerificationTempMeasResult	Temperature measuring path	ENUM16	Static	2		
	HBTR_DSCLeakageC0	Sensor leakage current	FLOAT	Static	4		
	HBTR_DSCTemperaturePT1	DSC sensor temperature PT1	FLOAT	Static	4		
	HBTR_DSCTemperaturePT2	DSC sensor temperature PT2	FLOAT	Static	4		
	HBTR_FrequencyReferenceDrift	Quartz reference frequency drift	FLOAT	Static	4		
	HBTR_GapCapacity	Gap capacity	FLOAT	Static	4		
	HBTR_GapCapacityDelta	Gap capacity difference	FLOAT	Static	4		
	HBTR_OverallRefCapacity	DSC sensor reference capacity	FLOAT	Static	4		
	HBTR_Package	Sensor version	ENUM16	Static	2		
	HBTR_TemperatureRefPT1	Temperature reference 1	FLOAT	Static	4		
	HBTR_TemperatureRefPT2	Temperature reference 2	FLOAT	Static	4		
	HBTR_VerificationDSCSensorResult	DSC sensor	ENUM16	Static	2		
	HBTR_VerificationFreqRefDriftResult	Reference frequency drift	ENUM16	Static	2		
	HBTR_VerificationPTSensorResult	Temperature sensor	ENUM16	Static	2		
	HBTR_VerificationTempMeasResult	Temperature measuring path	ENUM16	Static	2		

17.1.10 Transducer Block Heartbeat Results 3

Relative Index	Name	Label	Data type	Storage Class	Size (Bytes)	MODE_BLK	Writability
11	TRDHBTR3_TransducerTypeVer		UINT16	Static	2		
12	TRDHBTR3_XdError	Transducer Error	ENUM8	Dynamic	1		
13	TRDHBTR3_CollectionDirectory	Collection Directory	UINT32	Static	4		
14	TRDHBTR3_BlockErrDesc_1	Block error description	BIT_ENUM32	Dynamic	4		
15	TRDHBTR3_HBTR_VerificationDateTime_5	Date/time	STRING	Static	20		

Relative Index	Name	Label	Data type	Storage Class	Size (Bytes)	MODE_BLK	Writability
16	TRDHBTR3_HBTR_VerificationCounter_5	Verification ID	UINT16	Static	2		
17	TRDHBTR3_HBTR_OperationHours_5	Operating time	STRING	Static	14		
18	TRDHBTR3_HBTR_VerificationOverallResult_5	Overall result	ENUM16	Static	2		
19	TRDHBTR3_HBTR_VerificationSensorResult_5	Sensor	ENUM16	Static	2		
20	TRDHBTR3_HBTR_VerificationSensElectronicResult_5	Pre-amplifier module	ENUM16	Static	2		
21	TRDHBTR3_HBTR_VerificationInputOutputResult_5	I/O module	ENUM16	Static	2		
22	TRDHBTR3_HBTR_VerificationSupplyVoltageResult_5	Supply voltage	ENUM16	Static	2		
23	TRDHBTR3_HBTR_ExternalDeviceInfo_5	External device information	STRING	Static	32		
24	TRDHBTR3_HBTR_InputOutputSlot2Type_5	Slot 2 Modul Type	ENUM16	Static	2		
25	TRDHBTR3_HBTR_InputOutputSlot2Data1Value_5	Output 2 actual value 1	FLOAT	Static	4		
26	TRDHBTR3_HBTR_InputOutputSlot2Data1Result_5	Output 2	ENUM16	Static	2		
27	TRDHBTR3_HBTR_ExternVerificationFlags_5	External verification flags	BIT_ENUM32	Static	4		
28	TRDHBTR3_HBTR_VerificationDateTime_6	Date/time	STRING	Static	20		
29	TRDHBTR3_HBTR_VerificationCounter_6	Verification ID	UINT16	Static	2		
30	TRDHBTR3_HBTR_OperationHours_6	Operating time	STRING	Static	14		
31	TRDHBTR3_HBTR_VerificationOverallResult_6	Overall result	ENUM16	Static	2		
32	TRDHBTR3_HBTR_VerificationSensorResult_6	Sensor	ENUM16	Static	2		
33	TRDHBTR3_HBTR_VerificationSensElectronicResult_6	Pre-amplifier module	ENUM16	Static	2		
34	TRDHBTR3_HBTR_VerificationInputOutputResult_6	I/O module	ENUM16	Static	2		
35	TRDHBTR3_HBTR_VerificationSupplyVoltageResult_6	Supply voltage	ENUM16	Static	2		
36	TRDHBTR3_HBTR_ExternalDeviceInfo_6	External device information	STRING	Static	32		
37	TRDHBTR3_HBTR_InputOutputSlot2Type_6	Slot 2 Modul Type	ENUM16	Static	2		
38	TRDHBTR3_HBTR_InputOutputSlot2Data1Value_6	Output 2 actual value 1	FLOAT	Static	4		
39	TRDHBTR3_HBTR_InputOutputSlot2Data1Result_6	Output 2	ENUM16	Static	2		
40	TRDHBTR3_HBTR_ExternVerificationFlags_6	External verification flags	BIT_ENUM32	Static	4		
41	TRDHBTR3_STD_LockingState_1	Locking status	BIT_ENUM16	Dynamic	2		
42	TRDHBTR3_STD_UserLevel_1	Access status tooling	ENUM16	Static	2		
43	TRDHBTR3_SU_VolumeFlow_1	Volume flow unit	ENUM16	Static	2	AUTO	X
44	TRDHBTR3_SU_MassFlow_1	Mass flow unit	ENUM16	Static	2	AUTO	X
45	TRDHBTR3_SU_Density_1	Density unit	ENUM16	Static	2	AUTO	X
46	TRDHBTR3_SU_Temperature_1	Temperature unit	ENUM16	Static	2	AUTO	X
47	TRDHBTR3_STD_SWOptionActiveOverview_1	Software option overview	BIT_ENUM32	Static	4		

Relative Index	Name	Label	Data type	Storage Class	Size (Bytes)	MODE_BLK	Writability
48	TRDHBTR3_HBTR_DSCLeakageC0_5	Sensor leakage current	FLOAT	Static	4		
49	TRDHBTR3_HBTR_DSCTemperaturePT1_5	DSC sensor temperature PT1	FLOAT	Static	4		
50	TRDHBTR3_HBTR_DSCTemperaturePT2_5	DSC sensor temperature PT2	FLOAT	Static	4		
51	TRDHBTR3_HBTR_FrequencyReferenceDrift_5	Quartz reference frequency drift	FLOAT	Static	4		
52	TRDHBTR3_HBTR_GapCapacity_5	Gap capacity	FLOAT	Static	4		
53	TRDHBTR3_HBTR_GapCapacityDelta_5	Gap capacity difference	FLOAT	Static	4		
54	TRDHBTR3_HBTR_OverallRefCapacity_5	DSC sensor reference capacity	FLOAT	Static	4		
55	TRDHBTR3_HBTR_Package_5	Sensor version	ENUM16	Static	2		
56	TRDHBTR3_HBTR_TemperatureRefPT1_5	Temperature reference 1	FLOAT	Static	4		
57	TRDHBTR3_HBTR_TemperatureRefPT2_5	Temperature reference 2	FLOAT	Static	4		
58	TRDHBTR3_HBTR_VerificationDSCMeasResult_5	DSC sensor measuring path	ENUM16	Static	2		
59	TRDHBTR3_HBTR_VerificationDSCReferenceResult_5	DSC sensor reference	ENUM16	Static	2		
60	TRDHBTR3_HBTR_VerificationDSCSensorResult_5	DSC sensor	ENUM16	Static	2		
61	TRDHBTR3_HBTR_VerificationFreqRefDriftResult_5	Reference frequency drift	ENUM16	Static	2		
62	TRDHBTR3_HBTR_VerificationPTSensorResult_5	Temperature sensor	ENUM16	Static	2		
63	TRDHBTR3_HBTR_VerificationTempMeasResult_5	Temperature measuring path	ENUM16	Static	2		
64	TRDHBTR3_HBTR_DSCLeakageC0_6	Sensor leakage current	FLOAT	Static	4		
65	TRDHBTR3_HBTR_DSCTemperaturePT1_6	DSC sensor temperature PT1	FLOAT	Static	4		
66	TRDHBTR3_HBTR_DSCTemperaturePT2_6	DSC sensor temperature PT2	FLOAT	Static	4		
67	TRDHBTR3_HBTR_FrequencyReferenceDrift_6	Quartz reference frequency drift	FLOAT	Static	4		
68	TRDHBTR3_HBTR_GapCapacity_6	Gap capacity	FLOAT	Static	4		
69	TRDHBTR3_HBTR_GapCapacityDelta_6	Gap capacity difference	FLOAT	Static	4		
70	TRDHBTR3_HBTR_OverallRefCapacity_6	DSC sensor reference capacity	FLOAT	Static	4		
71	TRDHBTR3_HBTR_Package_6	Sensor version	ENUM16	Static	2		
72	TRDHBTR3_HBTR_TemperatureRefPT1_6	Temperature reference 1	FLOAT	Static	4		

Relative Index	Name	Label	Data type	Storage Class	Size (Bytes)	MODE_BLK	Writability
73	TRDHBTR3_HBTR_TemperatureRefPT2_6	Temperature reference 2	FLOAT	Static	4		
74	TRDHBTR3_HBTR_VerificationDSCMeasResult_6	DSC sensor measuring path	ENUM16	Static	2		
75	TRDHBTR3_HBTR_VerificationDSCReferenceResult_6	DSC sensor reference	ENUM16	Static	2		
76	TRDHBTR3_HBTR_VerificationDSCSensorResult_6	DSC sensor	ENUM16	Static	2		
77	TRDHBTR3_HBTR_VerificationFreqRefDriftResult_6	Reference frequency drift	ENUM16	Static	2		
78	TRDHBTR3_HBTR_VerificationPTSensorResult_6	Temperature sensor	ENUM16	Static	2		
79	TRDHBTR3_HBTR_VerificationTempMeasResult_6	Temperature measuring path	ENUM16	Static	2		
	TRDHBTR3_View1	View -1-	VIEW1	Dynamic	17		
	TRDHBTR3_StRev	Static Revision	UINT16	Static	2		
	TRDHBTR3_BlockErr	Block Error	BIT_ENUM16	Dynamic	2		
	TRDHBTR3_TransducerType	Transducer Type	ENUM16	Static	2		
	TRDHBTR3_XdError	Transducer Error	ENUM8	Dynamic	1		
	TRDHBTR3_BlockErrDesc_1	Block error description	BIT_ENUM32	Dynamic	4		
	STD_LockingState	Locking status	BIT_ENUM16	Dynamic	2		
	TRDHBTR3_View2	View -2-	VIEW2	Static	112		
	TRDHBTR3_StRev	Static Revision	UINT16	Static	2		
	TRDHBTR3_TransducerType	Transducer Type	ENUM16	Static	2		
	HBTR_VerificationDateTime	Date/time	STRING	Static	20		
	HBTR_VerificationCounter	Verification ID	UINT16	Static	2		
	HBTR_OperationHours	Operating time	STRING	Static	14		
	HBTR_VerificationOverallResult	Overall result	ENUM16	Static	2		
	HBTR_VerificationSensorResult	Sensor	ENUM16	Static	2		
	HBTR_VerificationSensElectronicResult	Pre-amplifier module	ENUM16	Static	2		
	HBTR_VerificationInputOutputResult	I/O module	ENUM16	Static	2		
	HBTR_VerificationSupplyVoltageResult	Supply voltage	ENUM16	Static	2		
	HBTR_ExternVerificationFlags	External verification flags	BIT_ENUM32	Static	4		
	HBTR_VerificationDateTime	Date/time	STRING	Static	20		
	HBTR_VerificationCounter	Verification ID	UINT16	Static	2		
	HBTR_OperationHours	Operating time	STRING	Static	14		
	HBTR_VerificationOverallResult	Overall result	ENUM16	Static	2		
	HBTR_VerificationSensorResult	Sensor	ENUM16	Static	2		
	HBTR_VerificationSensElectronicResult	Pre-amplifier module	ENUM16	Static	2		
	HBTR_VerificationInputOutputResult	I/O module	ENUM16	Static	2		

Relative Index	Name	Label	Data type	Storage Class	Size (Bytes)	MODE_BLK	Writability
	HBTR_VerificationSupplyVoltageResult	Supply voltage	ENUM16	Static	2		
	HBTR_ExternVerificationFlags	External verification flags	BIT_ENUM32	Static	4		
	HBTR_VerificationDSCMeasResult	DSC sensor measuring path	ENUM16	Static	2		
	HBTR_VerificationDSCReferenceResult	DSC sensor reference	ENUM16	Static	2		
	HBTR_VerificationDSCMeasResult	DSC sensor measuring path	ENUM16	Static	2		
	HBTR_VerificationDSCReferenceResult	DSC sensor reference	ENUM16	Static	2		
	TRDHBTR3_View3	View -3-	VIEW3	Dynamic	13		
	TRDHBTR3_StRev	Static Revision	UINT16	Static	2		
	TRDHBTR3_BlockErr	Block Error	BIT_ENUM16	Dynamic	2		
	TRDHBTR3_TransducerType	Transducer Type	ENUM16	Static	2		
	TRDHBTR3_XdError	Transducer Error	ENUM8	Dynamic	1		
	STD_LockingState	Locking status	BIT_ENUM16	Dynamic	2		
	TRDHBTR3_View4	View -4-	VIEW4	Static	95		
	TRDHBTR3_StRev	Static Revision	UINT16	Static	2		
	TRDHBTR3_Strategy	Strategy	UINT16	Static	2	AUTO	X
	TRDHBTR3_AlertKey	Alert Key	UINT8	Static	1	AUTO	X
	TRDHBTR3_TransducerType	Transducer Type	ENUM16	Static	2		
	HBTR_ExternalDeviceInfo	External device information	STRING	Static	32		
	HBTR_InputOutputSlot2Type	Slot 2 Modul Type	ENUM16	Static	2		
	HBTR_InputOutputSlot2Data1Value	Output 2 actual value 1	FLOAT	Static	4		
	HBTR_InputOutputSlot2Data1Result	Output 2	ENUM16	Static	2		
	HBTR_ExternalDeviceInfo	External device information	STRING	Static	32		
	HBTR_InputOutputSlot2Type	Slot 2 Modul Type	ENUM16	Static	2		
	HBTR_InputOutputSlot2Data1Value	Output 2 actual value 1	FLOAT	Static	4		
	HBTR_InputOutputSlot2Data1Result	Output 2	ENUM16	Static	2		
	STD_UserLevel	Access status tooling	ENUM16	Static	2		
	SU_Temperature	Temperature unit	ENUM16	Static	2	AUTO	X
	STD_SWOptionActiveOverview	Software option overview	BIT_ENUM32	Static	4		
	TRDHBTR3_View4_2	View -4-1	VIEW4	Static	94		
	TRDHBTR3_StRev	Static Revision	UINT16	Static	2		

Relative Index	Name	Label	Data type	Storage Class	Size (Bytes)	MODE_BLK	Writability
	HBTR_DSCLeakageC0	Sensor leakage current	FLOAT	Static	4		
	HBTR_DSCTemperaturePT1	DSC sensor temperature PT1	FLOAT	Static	4		
	HBTR_DSCTemperaturePT2	DSC sensor temperature PT2	FLOAT	Static	4		
	HBTR_FrequencyReferenceDrift	Quartz reference frequency drift	FLOAT	Static	4		
	HBTR_GapCapacity	Gap capacity	FLOAT	Static	4		
	HBTR_GapCapacityDelta	Gap capacity difference	FLOAT	Static	4		
	HBTR_OverallRefCapacity	DSC sensor reference capacity	FLOAT	Static	4		
	HBTR_Package	Sensor version	ENUM16	Static	2		
	HBTR_TemperatureRefPT1	Temperature reference 1	FLOAT	Static	4		
	HBTR_TemperatureRefPT2	Temperature reference 2	FLOAT	Static	4		
	HBTR_VerificationDSCSensorResult	DSC sensor	ENUM16	Static	2		
	HBTR_VerificationFreqRefDriftResult	Reference frequency drift	ENUM16	Static	2		
	HBTR_VerificationPTSensorResult	Temperature sensor	ENUM16	Static	2		
	HBTR_VerificationTempMeasResult	Temperature measuring path	ENUM16	Static	2		
	HBTR_DSCLeakageC0	Sensor leakage current	FLOAT	Static	4		
	HBTR_DSCTemperaturePT1	DSC sensor temperature PT1	FLOAT	Static	4		
	HBTR_DSCTemperaturePT2	DSC sensor temperature PT2	FLOAT	Static	4		
	HBTR_FrequencyReferenceDrift	Quartz reference frequency drift	FLOAT	Static	4		
	HBTR_GapCapacity	Gap capacity	FLOAT	Static	4		
	HBTR_GapCapacityDelta	Gap capacity difference	FLOAT	Static	4		
	HBTR_OverallRefCapacity	DSC sensor reference capacity	FLOAT	Static	4		
	HBTR_Package	Sensor version	ENUM16	Static	2		
	HBTR_TemperatureRefPT1	Temperature reference 1	FLOAT	Static	4		
	HBTR_TemperatureRefPT2	Temperature reference 2	FLOAT	Static	4		
	HBTR_VerificationDSCSensorResult	DSC sensor	ENUM16	Static	2		

Relative Index	Name	Label	Data type	Storage Class	Size (Bytes)	MODE_BLK	Writability
	HBTR_VerificationFreqRefDriftResult	Reference frequency drift	ENUM16	Static	2		
	HBTR_VerificationPTSensorResult	Temperature sensor	ENUM16	Static	2		
	HBTR_VerificationTempMeasResult	Temperature measuring path	ENUM16	Static	2		

17.1.11 Transducer Block Heartbeat Results 4

Relative Index	Name	Label	Data type	Storage Class	Size (Bytes)	MODE_BLK	Writability
11	TRDHBTR4_TransducerTypeVer		UINT16	Static	2		
12	TRDHBTR4_XdError	Transducer Error	ENUM8	Dynamic	1		
13	TRDHBTR4_CollectionDirectory	Collection Directory	UINT32	Static	4		
14	TRDHBTR4_BlockErrDesc_1	Block error description	BIT_ENUM32	Dynamic	4		
15	TRDHBTR4_HBTR_VerificationDateTime_7	Date/time	STRING	Static	20		
16	TRDHBTR4_HBTR_VerificationCounter_7	Verification ID	UINT16	Static	2		
17	TRDHBTR4_HBTR_OperationHours_7	Operating time	STRING	Static	14		
18	TRDHBTR4_HBTR_VerificationOverallResult_7	Overall result	ENUM16	Static	2		
19	TRDHBTR4_HBTR_VerificationSensorResult_7	Sensor	ENUM16	Static	2		
20	TRDHBTR4_HBTR_VerificationSensElectronicResult_7	Pre-amplifier module	ENUM16	Static	2		
21	TRDHBTR4_HBTR_VerificationInputOutputResult_7	I/O module	ENUM16	Static	2		
22	TRDHBTR4_HBTR_VerificationSupplyVoltageResult_7	Supply voltage	ENUM16	Static	2		
23	TRDHBTR4_HBTR_ExternalDeviceInfo_7	External device information	STRING	Static	32		
24	TRDHBTR4_HBTR_InputOutputSlot2Type_7	Slot 2 Modul Type	ENUM16	Static	2		
25	TRDHBTR4_HBTR_InputOutputSlot2Data1Value_7	Output 2 actual value 1	FLOAT	Static	4		
26	TRDHBTR4_HBTR_InputOutputSlot2Data1Result_7	Output 2	ENUM16	Static	2		
27	TRDHBTR4_HBTR_ExternVerificationFlags_7	External verification flags	BIT_ENUM32	Static	4		
28	TRDHBTR4_HBTR_VerificationDateTime_8	Date/time	STRING	Static	20		
29	TRDHBTR4_HBTR_VerificationCounter_8	Verification ID	UINT16	Static	2		
30	TRDHBTR4_HBTR_OperationHours_8	Operating time	STRING	Static	14		
31	TRDHBTR4_HBTR_VerificationOverallResult_8	Overall result	ENUM16	Static	2		
32	TRDHBTR4_HBTR_VerificationSensorResult_8	Sensor	ENUM16	Static	2		
33	TRDHBTR4_HBTR_VerificationSensElectronicResult_8	Pre-amplifier module	ENUM16	Static	2		
34	TRDHBTR4_HBTR_VerificationInputOutputResult_8	I/O module	ENUM16	Static	2		
35	TRDHBTR4_HBTR_VerificationSupplyVoltageResult_8	Supply voltage	ENUM16	Static	2		
36	TRDHBTR4_HBTR_ExternalDeviceInfo_8	External device information	STRING	Static	32		

Relative Index	Name	Label	Data type	Storage Class	Size (Bytes)	MODE_BLK	Writability
37	TRDHBTR4_HBTR_InputOutputSlot2Type_8	Slot 2 Modul Type	ENUM16	Static	2		
38	TRDHBTR4_HBTR_InputOutputSlot2Data1Value_8	Output 2 actual value 1	FLOAT	Static	4		
39	TRDHBTR4_HBTR_InputOutputSlot2Data1Result_8	Output 2	ENUM16	Static	2		
40	TRDHBTR4_HBTR_ExternVerificationFlags_8	External verification flags	BIT_ENUM32	Static	4		
41	TRDHBTR4_STD_LockingState_1	Locking status	BIT_ENUM16	Dynamic	2		
42	TRDHBTR4_STD_UserLevel_1	Access status tooling	ENUM16	Static	2		
43	TRDHBTR4_SU_VolumeFlow_1	Volume flow unit	ENUM16	Static	2	AUTO	X
44	TRDHBTR4_SU_MassFlow_1	Mass flow unit	ENUM16	Static	2	AUTO	X
45	TRDHBTR4_SU_Density_1	Density unit	ENUM16	Static	2	AUTO	X
46	TRDHBTR4_SU_Temperature_1	Temperature unit	ENUM16	Static	2	AUTO	X
47	TRDHBTR4_STD_SWOptionActiveOverview_1	Software option overview	BIT_ENUM32	Static	4		
48	TRDHBTR4_HBTR_DSCLeakageC0_7	Sensor leakage current	FLOAT	Static	4		
49	TRDHBTR4_HBTR_DSCTemperaturePT1_7	DSC sensor temperature PT1	FLOAT	Static	4		
50	TRDHBTR4_HBTR_DSCTemperaturePT2_7	DSC sensor temperature PT2	FLOAT	Static	4		
51	TRDHBTR4_HBTR_FrequencyReferenceDrift_7	Quartz reference frequency drift	FLOAT	Static	4		
52	TRDHBTR4_HBTR_GapCapacity_7	Gap capacity	FLOAT	Static	4		
53	TRDHBTR4_HBTR_GapCapacityDelta_7	Gap capacity difference	FLOAT	Static	4		
54	TRDHBTR4_HBTR_OverallRefCapacity_7	DSC sensor reference capacity	FLOAT	Static	4		
55	TRDHBTR4_HBTR_Package_7	Sensor version	ENUM16	Static	2		
56	TRDHBTR4_HBTR_TemperatureRefPT1_7	Temperature reference 1	FLOAT	Static	4		
57	TRDHBTR4_HBTR_TemperatureRefPT2_7	Temperature reference 2	FLOAT	Static	4		
58	TRDHBTR4_HBTR_VerificationDSCMeasResult_7	DSC sensor measuring path	ENUM16	Static	2		
59	TRDHBTR4_HBTR_VerificationDSCReferenceResult_7	DSC sensor reference	ENUM16	Static	2		
60	TRDHBTR4_HBTR_VerificationDSCSensorResult_7	DSC sensor	ENUM16	Static	2		
61	TRDHBTR4_HBTR_VerificationFreqRefDriftResult_7	Reference frequency drift	ENUM16	Static	2		
62	TRDHBTR4_HBTR_VerificationPTSensorResult_7	Temperature sensor	ENUM16	Static	2		
63	TRDHBTR4_HBTR_VerificationTempMeasResult_7	Temperature measuring path	ENUM16	Static	2		

Relative Index	Name	Label	Data type	Storage Class	Size (Bytes)	MODE_BLK	Writability
64	TRDHBTR4_HBTR_DSCLeakageC0_8	Sensor leakage current	FLOAT	Static	4		
65	TRDHBTR4_HBTR_DSCTemperaturePT1_8	DSC sensor temperature PT1	FLOAT	Static	4		
66	TRDHBTR4_HBTR_DSCTemperaturePT2_8	DSC sensor temperature PT2	FLOAT	Static	4		
67	TRDHBTR4_HBTR_FrequencyReferenceDrift_8	Quartz reference frequency drift	FLOAT	Static	4		
68	TRDHBTR4_HBTR_GapCapacity_8	Gap capacity	FLOAT	Static	4		
69	TRDHBTR4_HBTR_GapCapacityDelta_8	Gap capacity difference	FLOAT	Static	4		
70	TRDHBTR4_HBTR_OverallRefCapacity_8	DSC sensor reference capacity	FLOAT	Static	4		
71	TRDHBTR4_HBTR_Package_8	Sensor version	ENUM16	Static	2		
72	TRDHBTR4_HBTR_TemperatureRefPT1_8	Temperature reference 1	FLOAT	Static	4		
73	TRDHBTR4_HBTR_TemperatureRefPT2_8	Temperature reference 2	FLOAT	Static	4		
74	TRDHBTR4_HBTR_VerificationDSCMeasResult_8	DSC sensor measuring path	ENUM16	Static	2		
75	TRDHBTR4_HBTR_VerificationDSCReferenceResult_8	DSC sensor reference	ENUM16	Static	2		
76	TRDHBTR4_HBTR_VerificationDSCSensorResult_8	DSC sensor	ENUM16	Static	2		
77	TRDHBTR4_HBTR_VerificationFreqRefDriftResult_8	Reference frequency drift	ENUM16	Static	2		
78	TRDHBTR4_HBTR_VerificationPTSensorResult_8	Temperature sensor	ENUM16	Static	2		
79	TRDHBTR4_HBTR_VerificationTempMeasResult_8	Temperature measuring path	ENUM16	Static	2		
	TRDHBTR4_View1	View -1-	VIEW1	Dynamic	17		
	TRDHBTR4_StRev	Static Revision	UINT16	Static	2		
	TRDHBTR4_BlockErr	Block Error	BIT_ENUM16	Dynamic	2		
	TRDHBTR4_TransducerType	Transducer Type	ENUM16	Static	2		
	TRDHBTR4_XdError	Transducer Error	ENUM8	Dynamic	1		
	TRDHBTR4_BlockErrDesc_1	Block error description	BIT_ENUM32	Dynamic	4		
	STD_LockingState	Locking status	BIT_ENUM16	Dynamic	2		
	TRDHBTR4_View2	View -2-	VIEW2	Static	112		
	TRDHBTR4_StRev	Static Revision	UINT16	Static	2		
	TRDHBTR4_TransducerType	Transducer Type	ENUM16	Static	2		
	HBTR_VerificationDateTime	Date/time	STRING	Static	20		
	HBTR_VerificationCounter	Verification ID	UINT16	Static	2		
	HBTR_OperationHours	Operating time	STRING	Static	14		

Relative Index	Name	Label	Data type	Storage Class	Size (Bytes)	MODE_BLK	Writability
	HBTR_VerificationOverallResult	Overall result	ENUM16	Static	2		
	HBTR_VerificationSensorResult	Sensor	ENUM16	Static	2		
	HBTR_VerificationSensElectronicResult	Pre-amplifier module	ENUM16	Static	2		
	HBTR_VerificationInputOutputResult	I/O module	ENUM16	Static	2		
	HBTR_VerificationSupplyVoltageResult	Supply voltage	ENUM16	Static	2		
	HBTR_ExternVerificationFlags	External verification flags	BIT_ENUM32	Static	4		
	HBTR_VerificationDateTime	Date/time	STRING	Static	20		
	HBTR_VerificationCounter	Verification ID	UINT16	Static	2		
	HBTR_OperationHours	Operating time	STRING	Static	14		
	HBTR_VerificationOverallResult	Overall result	ENUM16	Static	2		
	HBTR_VerificationSensorResult	Sensor	ENUM16	Static	2		
	HBTR_VerificationSensElectronicResult	Pre-amplifier module	ENUM16	Static	2		
	HBTR_VerificationInputOutputResult	I/O module	ENUM16	Static	2		
	HBTR_VerificationSupplyVoltageResult	Supply voltage	ENUM16	Static	2		
	HBTR_ExternVerificationFlags	External verification flags	BIT_ENUM32	Static	4		
	HBTR_VerificationDSCMeasResult	DSC sensor measuring path	ENUM16	Static	2		
	HBTR_VerificationDSCReferenceResult	DSC sensor reference	ENUM16	Static	2		
	HBTR_VerificationDSCMeasResult	DSC sensor measuring path	ENUM16	Static	2		
	HBTR_VerificationDSCReferenceResult	DSC sensor reference	ENUM16	Static	2		
	TRDHBTR4_View3	View -3-	VIEW3	Dynamic	13		
	TRDHBTR4_StRev	Static Revision	UINT16	Static	2		
	TRDHBTR4_BlockErr	Block Error	BIT_ENUM16	Dynamic	2		
	TRDHBTR4_TransducerType	Transducer Type	ENUM16	Static	2		
	TRDHBTR4_XdError	Transducer Error	ENUM8	Dynamic	1		
	STD_LockingState	Locking status	BIT_ENUM16	Dynamic	2		
	TRDHBTR4_View4	View -4-	VIEW4	Static	95		
	TRDHBTR4_StRev	Static Revision	UINT16	Static	2		
	TRDHBTR4_Strategy	Strategy	UINT16	Static	2	AUTO	X
	TRDHBTR4_AlertKey	Alert Key	UINT8	Static	1	AUTO	X
	TRDHBTR4_TransducerType	Transducer Type	ENUM16	Static	2		
	HBTR_ExternalDeviceInfo	External device information	STRING	Static	32		
	HBTR_InputOutputSlot2Type	Slot 2 Modul Type	ENUM16	Static	2		

Relative Index	Name	Label	Data type	Storage Class	Size (Bytes)	MODE_BLK	Writability
	HBTR_InputOutputSlot2Data1Value	Output 2 actual value 1	FLOAT	Static	4		
	HBTR_InputOutputSlot2Data1Result	Output 2	ENUM16	Static	2		
	HBTR_ExternalDeviceInfo	External device information	STRING	Static	32		
	HBTR_InputOutputSlot2Type	Slot 2 Modul Type	ENUM16	Static	2		
	HBTR_InputOutputSlot2Data1Value	Output 2 actual value 1	FLOAT	Static	4		
	HBTR_InputOutputSlot2Data1Result	Output 2	ENUM16	Static	2		
	STD_UserLevel	Access status tooling	ENUM16	Static	2		
	SU_Temperature	Temperature unit	ENUM16	Static	2	AUTO	X
	STD_SWOptionActiveOverview	Software option overview	BIT_ENUM32	Static	4		
	TRDHBTR4_View4_2	View -4-1	VIEW4	Static	94		
	TRDHBTR4_StRev	Static Revision	UINT16	Static	2		
	HBTR_DSCLeakageC0	Sensor leakage current	FLOAT	Static	4		
	HBTR_DSCTemperaturePT1	DSC sensor temperature PT1	FLOAT	Static	4		
	HBTR_DSCTemperaturePT2	DSC sensor temperature PT2	FLOAT	Static	4		
	HBTR_FrequencyReferenceDrift	Quartz reference frequency drift	FLOAT	Static	4		
	HBTR_GapCapacity	Gap capacity	FLOAT	Static	4		
	HBTR_GapCapacityDelta	Gap capacity difference	FLOAT	Static	4		
	HBTR_OverallRefCapacity	DSC sensor reference capacity	FLOAT	Static	4		
	HBTR_Package	Sensor version	ENUM16	Static	2		
	HBTR_TemperatureRefPT1	Temperature reference 1	FLOAT	Static	4		
	HBTR_TemperatureRefPT2	Temperature reference 2	FLOAT	Static	4		
	HBTR_VerificationDSCSensorResult	DSC sensor	ENUM16	Static	2		
	HBTR_VerificationFreqRefDriftResult	Reference frequency drift	ENUM16	Static	2		
	HBTR_VerificationPTSensorResult	Temperature sensor	ENUM16	Static	2		
	HBTR_VerificationTempMeasResult	Temperature measuring path	ENUM16	Static	2		
	HBTR_DSCLeakageC0	Sensor leakage current	FLOAT	Static	4		
	HBTR_DSCTemperaturePT1	DSC sensor temperature PT1	FLOAT	Static	4		

Relative Index	Name	Label	Data type	Storage Class	Size (Bytes)	MODE_BLK	Writability
	HBTR_DSCTemperaturePT2	DSC sensor temperature PT2	FLOAT	Static	4		
	HBTR_FrequencyReferenceDrift	Quartz reference frequency drift	FLOAT	Static	4		
	HBTR_GapCapacity	Gap capacity	FLOAT	Static	4		
	HBTR_GapCapacityDelta	Gap capacity difference	FLOAT	Static	4		
	HBTR_OverallRefCapacity	DSC sensor reference capacity	FLOAT	Static	4		
	HBTR_Package	Sensor version	ENUM16	Static	2		
	HBTR_TemperatureRefPT1	Temperature reference 1	FLOAT	Static	4		
	HBTR_TemperatureRefPT2	Temperature reference 2	FLOAT	Static	4		
	HBTR_VerificationDSCSensorResult	DSC sensor	ENUM16	Static	2		
	HBTR_VerificationFreqRefDriftResult	Reference frequency drift	ENUM16	Static	2		
	HBTR_VerificationPTSensorResult	Temperature sensor	ENUM16	Static	2		
	HBTR_VerificationTempMeasResult	Temperature measuring path	ENUM16	Static	2		

17.1.12 Transducer Block HistoROM

Relative Index	Name	Label	Data type	Storage Class	Size (Bytes)	MODE_BLK	Writability
11	TRDHROM_TransducerTypeVer		UINT16	Static	2		
12	TRDHROM_XdError	Transducer Error	ENUM8	Dynamic	1		
13	TRDHROM_CollectionDirectory	Collection Directory	UINT32	Static	4		
14	TRDHROM_BlockErrDesc_1	Block error description	BIT_ENUM32	Dynamic	4		
15	TRDHROM_SPV_CurrentSysConditionUnion_1	Actual diagnostics	UINT32	Static	4		
16	TRDHROM_SU_EnergyFlow_1	Energy flow unit	ENUM16	Static	2	AUTO	X
17	TRDHROM_SU_Pressure_1	Pressure unit	ENUM16	Static	2	AUTO	X
18	TRDHROM_STD_SWOptionActiveOverview_1	Software option overview	BIT_ENUM32	Static	4		
19	TRDHROM_BDT_Prepare_1		BYTEARRAY	Static	25	AUTO	
20	TRDHROM_BDT_Status_1		BYTEARRAY	Static	25		
21	TRDHROM_BDT_CfgReadWrite_1		BYTEARRAY	Static	3	AUTO	
22	TRDHROM_BDT_Data_1		BYTEARRAY	Static	64	AUTO	
23	TRDHROM_BDT_DataTransferred_1		BYTEARRAY	Static	4	AUTO	
24	TRDHROM_HB_OperationHours_1		UINT32	Static	4		
25	TRDHROM_HB_TrendPackageSize_1		UINT8	Static	1	AUTO	

Relative Index	Name	Label	Data type	Storage Class	Size (Bytes)	MODE_BLK	Writability
26	TRDHROM_HB_TrendStorageTime_1	Trend storage time	UINT32	Static	4		
27	TRDHROM_HB_TrendSupportedPackageSize_1		UINT8	Static	1		
28	TRDHROM_HB_MaxTrendEntries_1		UINT16	Static	2		
29	TRDHROM_STD_CustomizedData_1	Customized	UINT8	Static	1		
30	TRDHROM_STD_DeleteCustomizedData_1	Reset ordered configuration	ENUM16	Static	2	AUTO	X
31	TRDHROM_STD_FactoryDataValid_1		UINT8	Static	1		
32	TRDHROM_SU_MassFlow_1	Mass flow unit	ENUM16	Static	2	AUTO	X
33	TRDHROM_SU_VolumeFlow_1	Volume flow unit	ENUM16	Static	2	AUTO	X
34	TRDHROM_SU_CorrVolumeFlow_1	Corrected volume flow unit	ENUM16	Static	2	AUTO	X
35	TRDHROM_SU_Density_1	Density unit	ENUM16	Static	2	AUTO	X
36	TRDHROM_STD_UserLevel_1	Access status tooling	ENUM16	Static	2		
37	TRDHROM_SU_Temperature_1	Temperature unit	ENUM16	Static	2	AUTO	X
38	TRDHROM_STD_LockingState_1	Locking status	BIT_ENUM16	Dynamic	2		
39	TRDHROM_STD_FunctionBlockTable_1		UINT32	Static	4		
42	TRDHROM_STD_FieldbusType_1	Fieldbus Type	ENUM8	Static	1		
43	TRDHROM_PrepareCtrl	BDT Prepare Ctrl	Standard	Static	52		
	TRDHROM_TransactionId	Transaction ID	UINT8	Static	1	AUTO	
	TRDHROM_Version	Version	UINT8	Static	1	AUTO	
	TRDHROM_BdtChannel	Channel	UINT8	Static	1	AUTO	
	TRDHROM_DataId	Data ID	UINT8	Static	1	AUTO	
	TRDHROM_U8Entry1	uint8Entry 1	UINT8	Static	1	AUTO	
	TRDHROM_U8Entry2	uint8Entry 2	UINT8	Static	1	AUTO	
	TRDHROM_U8Entry3	uint8Entry 3	UINT8	Static	1	AUTO	
	TRDHROM_U8Entry4	uint8Entry 4	UINT8	Static	1	AUTO	
	TRDHROM_U8Entry5	uint8Entry 5	UINT8	Static	1	AUTO	
	TRDHROM_U16Entry1	uint16Entry 1	UINT16	Static	2	AUTO	
	TRDHROM_U16Entry2	uint16Entry 2	UINT16	Static	2	AUTO	
	TRDHROM_U16Entry3	uint16Entry 3	UINT16	Static	2	AUTO	
	TRDHROM_U16Entry4	uint16Entry 4	UINT16	Static	2	AUTO	
	TRDHROM_U16Entry5	uint16Entry 5	UINT16	Static	2	AUTO	
	TRDHROM_U32Entry1	uint32Entry 1	UINT32	Static	4	AUTO	
	TRDHROM_U32Entry2	uint32Entry 2	UINT32	Static	4	AUTO	
	TRDHROM_U32Entry3	uint32Entry 3	UINT32	Static	4	AUTO	
	TRDHROM_U32Entry4	uint32Entry 4	UINT32	Static	4	AUTO	
	TRDHROM_F32Entry1	floatEntry 1	FLOAT	Static	4	AUTO	
	TRDHROM_F32Entry2	floatEntry 2	FLOAT	Static	4	AUTO	
	TRDHROM_F32Entry3	floatEntry 3	FLOAT	Static	4	AUTO	
	TRDHROM_F32Entry4	floatEntry 4	FLOAT	Static	4	AUTO	

Relative Index	Name	Label	Data type	Storage Class	Size (Bytes)	MODE_BLK	Writability
	TRDHROM_Trigger	Trigger	UINT8	Static	1	AUTO	
44	TRDHROM_StatusPrepareCtrl	Status Prepare Ctrl	Standard	Static	52		
	TRDHROM_StatusTransactionId		UINT8	Static	1		
	TRDHROM_StatusBdtVersion		UINT8	Static	1		
	TRDHROM_StatusChannel		UINT8	Static	1		
	TRDHROM_StatusDataId		UINT8	Static	1		
	TRDHROM_StatusU8Item1		UINT8	Static	1		
	TRDHROM_StatusU8Item2		UINT8	Static	1		
	TRDHROM_StatusU8Item3		UINT8	Static	1		
	TRDHROM_StatusU8Item4		UINT8	Static	1		
	TRDHROM_StatusU8Item5		UINT8	Static	1		
	TRDHROM_StatusU16Item1		UINT16	Static	2		
	TRDHROM_StatusU16Item2		UINT16	Static	2		
	TRDHROM_StatusU16Item3		UINT16	Static	2		
	TRDHROM_StatusU16Item4		UINT16	Static	2		
	TRDHROM_StatusU16Item5		UINT16	Static	2		
	TRDHROM_StatusU32Item1		UINT32	Static	4		
	TRDHROM_StatusU32Item2		UINT32	Static	4		
	TRDHROM_StatusU32Item3		UINT32	Static	4		
	TRDHROM_StatusU32Item4		UINT32	Static	4		
	TRDHROM_StatusF32Item1		FLOAT	Static	4		
	TRDHROM_StatusF32Item2		FLOAT	Static	4		
	TRDHROM_StatusF32Item3		FLOAT	Static	4		
	TRDHROM_StatusF32Item4		FLOAT	Static	4		
	TRDHROM_StatusTrigger		UINT8	Static	1		
45	TRDHROM_BDT_CfgReadWriteCtrl_1		UINT16	Static	2	AUTO	
46	TRDHROM_BDT_DataTransferredCtrl_1		UINT8	Static	1	AUTO	
47	TRDHROM_BdtDataCtrl		UINT16	Static	2	AUTO	
48	TRDHROM_BdtSampledata		FLOAT	Static	4	AUTO	
49	TRDHROM_BdtEventData		Standard	Static	95		
	TRDHROM_TimeStamp1		STRING	Static	14		
	TRDHROM_EventId1		UINT16	Static	2		
	TRDHROM_EventSpecificData1		UINT8	Static	1		
	TRDHROM_EventCategory1		UINT8	Static	1		
	TRDHROM_EventClass1		UINT8	Static	1		
	TRDHROM_TimeStamp2		STRING	Static	14		
	TRDHROM_EventId2		UINT16	Static	2		
	TRDHROM_EventSpecificData2		UINT8	Static	1		
	TRDHROM_EventCategory2		UINT8	Static	1		
	TRDHROM_EventClass2		UINT8	Static	1		
	TRDHROM_TimeStamp3		STRING	Static	14		

Relative Index	Name	Label	Data type	Storage Class	Size (Bytes)	MODE_BLK	Writability
	TRDHROM_EventId3		UINT16	Static	2		
	TRDHROM_EventSpecificData3		UINT8	Static	1		
	TRDHROM_EventCategory3		UINT8	Static	1		
	TRDHROM_EventClass3		UINT8	Static	1		
	TRDHROM_TimeStamp4		STRING	Static	14		
	TRDHROM_EventId4		UINT16	Static	2		
	TRDHROM_EventSpecificData4		UINT8	Static	1		
	TRDHROM_EventCategory4		UINT8	Static	1		
	TRDHROM_EventClass4		UINT8	Static	1		
	TRDHROM_TimeStamp5		STRING	Static	14		
	TRDHROM_EventId5		UINT16	Static	2		
	TRDHROM_EventSpecificData5		UINT8	Static	1		
	TRDHROM_EventCategory5		UINT8	Static	1		
	TRDHROM_EventClass5		UINT8	Static	1		
	TRDHROM_View1	View -1-	VIEW1	Dynamic	17		
	TRDHROM_StRev	Static Revision	UINT16	Static	2		
	TRDHROM_BlockErr	Block Error	BIT_ENUM16	Dynamic	2		
	TRDHROM_TransducerType	Transducer Type	ENUM16	Static	2		
	TRDHROM_XdError	Transducer Error	ENUM8	Dynamic	1		
	TRDHROM_BlockErrDesc_1	Block error description	BIT_ENUM32	Dynamic	4		
	STD_LockingState	Locking status	BIT_ENUM16	Dynamic	2		
	TRDHROM_View2	View -2-	VIEW2	Static	26		
	TRDHROM_StRev	Static Revision	UINT16	Static	2		
	TRDHROM_TransducerType	Transducer Type	ENUM16	Static	2		
	SU_EnergyFlow	Energy flow unit	ENUM16	Static	2	AUTO	X
	SU_Pressure	Pressure unit	ENUM16	Static	2	AUTO	X
	HB_TrendPackageSize		UINT8	Static	1	AUTO	
	HB_TrendSupportedPackageSize		UINT8	Static	1		
	HB_MaxTrendEntries		UINT16	Static	2		
	STD_CustomizedData	Customized	UINT8	Static	1		
	STD_DeleteCustomizedData	Reset ordered configuration	ENUM16	Static	2	AUTO	X
	STD_FactoryDataValid		UINT8	Static	1		
	SU_MassFlow	Mass flow unit	ENUM16	Static	2	AUTO	X
	SU_VolumeFlow	Volume flow unit	ENUM16	Static	2	AUTO	X
	SU_CorrVolumeFlow	Corrected volume flow unit	ENUM16	Static	2	AUTO	X
	SU_Density	Density unit	ENUM16	Static	2	AUTO	X
	SU_Temperature	Temperature unit	ENUM16	Static	2	AUTO	X
	TRDHROM_View3	View -3-	VIEW3	Dynamic	17		
	TRDHROM_StRev	Static Revision	UINT16	Static	2		

Relative Index	Name	Label	Data type	Storage Class	Size (Bytes)	MODE_BLK	Writability
	TRDHROM_BlockErr	Block Error	BIT_ENUM16	Dynamic	2		
	TRDHROM_TransducerType	Transducer Type	ENUM16	Static	2		
	TRDHROM_XdError	Transducer Error	ENUM8	Dynamic	1		
	TRDHROM_BlockErrDesc_1	Block error description	BIT_ENUM32	Dynamic	4		
	STD_LockingState	Locking status	BIT_ENUM16	Dynamic	2		
	TRDHROM_View3_2	View -3-1	VIEW3	Static	2		
	TRDHROM_StRev	Static Revision	UINT16	Static	2		
	TRDHROM_View4	View -4-	VIEW4	Static	53		
	TRDHROM_StRev	Static Revision	UINT16	Static	2		
	TRDHROM_Strategy	Strategy	UINT16	Static	2	AUTO	X
	TRDHROM_AlertKey	Alert Key	UINT8	Static	1	AUTO	X
	TRDHROM_TransducerType	Transducer Type	ENUM16	Static	2		
	SPV_CurrentSysConditionUnion	Actual diagnostics	UINT32	Static	4		
	STD_SWOptionActiveOverview	Software option overview	BIT_ENUM32	Static	4		
	BDT_Prepare		BYTEARRAY	Static	25	AUTO	
	HB_OperationHours		UINT32	Static	4		
	HB_TrendStorageTime	Trend storage time	UINT32	Static	4		
	STD_UserLevel	Access status tooling	ENUM16	Static	2		
	BDT_CfgReadWriteCtrl		UINT16	Static	2	AUTO	
	BDT_DataTransferredCtrl		UINT8	Static	1	AUTO	
	TRDHROM_View4_2	View -4-1	VIEW4	Static	98		
	TRDHROM_StRev	Static Revision	UINT16	Static	2		
	BDT_Status		BYTEARRAY	Static	25		
	BDT_CfgReadWrite		BYTEARRAY	Static	3	AUTO	
	BDT_Data		BYTEARRAY	Static	64	AUTO	
	BDT_DataTransferred		BYTEARRAY	Static	4	AUTO	
	TRDHROM_View4_3	View -4-2	VIEW4	Static	106		
	TRDHROM_StRev	Static Revision	UINT16	Static	2		

17.1.13 Transducer Block Service Info

Relative Index	Name	Label	Data type	Storage Class	Size (Bytes)	MODE_BLK	Writability
11	TRDSRVIF_TransducerTypeVer		UINT16	Static	2		
12	TRDSRVIF_XdError	Transducer Error	ENUM8	Dynamic	1		
13	TRDSRVIF_CollectionDirectory	Collection Directory	UINT32	Static	4		
14	TRDSRVIF_BlockErrDesc_1	Block error description	BIT_ENUM32	Dynamic	4		
15	TRDSRVIF_STD_UserLevel_1	Access status tooling	ENUM16	Static	2		

Relative Index	Name	Label	Data type	Storage Class	Size (Bytes)	MODE_BLK	Writability
16	TRDSRVIF_STD_LockingState_1	Locking status	BIT_ENUM16	Dynamic	2		
17	TRDSRVIF_STD_SWOptionActiveOverview_1	Software option overview	BIT_ENUM32	Static	4		
18	TRDSRVIF_MDI_ModuleHardwareRevision_3	Hardware revision	STRING	Static	16	AUTO	X
19	TRDSRVIF_MDI_ModuleName_3	Module name	STRING	Static	16	AUTO	X
20	TRDSRVIF_MDI_ModuleAvailable_3	Resource available	UINT8	Static	1		
21	TRDSRVIF_MDI_ModuleBootloaderRevision_2	Bootloader revision	UINT32	Static	4		
22	TRDSRVIF_MDI_ModuleFirmwareBuildNumber_2	Build no. software	UINT16	Static	2		
23	TRDSRVIF_MDI_ModuleFirmwareRevision_2	Software revision	UINT32	Static	4		
24	TRDSRVIF_MDI_ModuleHardwareRevision_4	Hardware revision	STRING	Static	16	AUTO	X
25	TRDSRVIF_MDI_ModuleName_4	Module name	STRING	Static	16	AUTO	X
26	TRDSRVIF_MDI_ModuleAvailable_4	Resource available	UINT8	Static	1		
27	TRDSRVIF_MDI_ModuleBootloaderRevision_3	Bootloader revision	UINT32	Static	4		
28	TRDSRVIF_MDI_ModuleFirmwareBuildNumber_3	Build no. software	UINT16	Static	2		
29	TRDSRVIF_MDI_ModuleFirmwareRevision_3	Software revision	UINT32	Static	4		
30	TRDSRVIF_MDI_ModuleBootloaderRevision_4	Bootloader revision	UINT32	Static	4		
31	TRDSRVIF_MDI_ModuleFirmwareBuildNumber_4	Build no. software	UINT16	Static	2		
32	TRDSRVIF_MDI_ModuleFirmwareRevision_4	Software revision	UINT32	Static	4		
33	TRDSRVIF_MDI_ModuleAvailable_1	Resource available	UINT8	Static	1		
34	TRDSRVIF_MDI_ModuleName_1	Module name	STRING	Static	16	AUTO	X
35	TRDSRVIF_MDI_ModuleSerialNumber_1	Serial number	STRING	Static	16	AUTO	X
36	TRDSRVIF_MDI_ModuleBootloaderRevision_1	Bootloader revision	UINT32	Static	4		
37	TRDSRVIF_MDI_ModuleFirmwareBuildNumber_1	Build no. software	UINT16	Static	2		
38	TRDSRVIF_MDI_ModuleFirmwareRevision_1	Software revision	UINT32	Static	4		
39	TRDSRVIF_MDI_ModuleHardwareRevision_1	Hardware revision	STRING	Static	16	AUTO	X
40	TRDSRVIF_MDI_ModuleSerialNumber_3	Serial number	STRING	Static	16	AUTO	X
41	TRDSRVIF_MDI_ModuleSerialNumber_4	Serial number	STRING	Static	16	AUTO	X
42	TRDSRVIF_MDI_ModuleSerialNumber_2	Serial number	STRING	Static	16	AUTO	X
43	TRDSRVIF_MDI_ModuleHardwareRevision_2	Hardware revision	STRING	Static	16	AUTO	X
44	TRDSRVIF_MDI_ModuleName_2	Module name	STRING	Static	16	AUTO	X

Relative Index	Name	Label	Data type	Storage Class	Size (Bytes)	MODE_BLK	Writability
45	TRDSRVIF_MDI_ModuleAvailable_2	Resource available	UINT8	Static	1		
46	TRDSRVIF_VTX_DSCID_1	DSC ID	STRING	Static	12	AUTO	X
47	TRDSRVIF_VTX_DSCSerialNumber_1	DSC sensor serial number	STRING	Static	15	AUTO	X
48	TRDSRVIF_VTX_MeterBodyID_1	Meter body ID	STRING	Static	12	AUTO	X
49	TRDSRVIF_VTX_MeterBodySerialNumber_1	Meter body serial number	STRING	Static	12	AUTO	X
	TRDSRVIF_View1	View -1-	VIEW1	Dynamic	17		
	TRDSRVIF_StRev	Static Revision	UINT16	Static	2		
	TRDSRVIF_BlockErr	Block Error	BIT_ENUM16	Dynamic	2		
	TRDSRVIF_TransducerType	Transducer Type	ENUM16	Static	2		
	TRDSRVIF_XdError	Transducer Error	ENUM8	Dynamic	1		
	TRDSRVIF_BlockErrDesc_1	Block error description	BIT_ENUM32	Dynamic	4		
	STD_LockingState	Locking status	BIT_ENUM16	Dynamic	2		
	TRDSRVIF_View2	View -2-	VIEW2	Static	94		
	TRDSRVIF_StRev	Static Revision	UINT16	Static	2		
	TRDSRVIF_TransducerType	Transducer Type	ENUM16	Static	2		
	STD_SWOptionActiveOverview	Software option overview	BIT_ENUM32	Static	4		
	MDI_ModuleBootloaderRevision	Bootloader revision	UINT32	Static	4		
	MDI_ModuleFirmwareBuildNumber	Build no. software	UINT16	Static	2		
	MDI_ModuleFirmwareRevision	Software revision	UINT32	Static	4		
	MDI_ModuleAvailable	Resource available	UINT8	Static	1		
	MDI_ModuleName	Module name	STRING	Static	16	AUTO	X
	MDI_ModuleSerialNumber	Serial number	STRING	Static	16	AUTO	X
	MDI_ModuleBootloaderRevision	Bootloader revision	UINT32	Static	4		
	MDI_ModuleFirmwareBuildNumber	Build no. software	UINT16	Static	2		
	MDI_ModuleFirmwareRevision	Software revision	UINT32	Static	4		
	MDI_ModuleHardwareRevision	Hardware revision	STRING	Static	16	AUTO	X
	MDI_ModuleName	Module name	STRING	Static	16	AUTO	X
	MDI_ModuleAvailable	Resource available	UINT8	Static	1		
	TRDSRVIF_View3	View -3-	VIEW3	Dynamic	17		
	TRDSRVIF_StRev	Static Revision	UINT16	Static	2		
	TRDSRVIF_BlockErr	Block Error	BIT_ENUM16	Dynamic	2		
	TRDSRVIF_TransducerType	Transducer Type	ENUM16	Static	2		
	TRDSRVIF_XdError	Transducer Error	ENUM8	Dynamic	1		

Relative Index	Name	Label	Data type	Storage Class	Size (Bytes)	MODE_BLK	Writability
	TRDSRVIF_BlockErrDesc_1	Block error description	BIT_ENUM32	Dynamic	4		
	STD_LockingState	Locking status	BIT_ENUM16	Dynamic	2		
	TRDSRVIF_View4	View -4-	VIEW4	Static	102		
	TRDSRVIF_StRev	Static Revision	UINT16	Static	2		
	TRDSRVIF_Strategy	Strategy	UINT16	Static	2	AUTO	X
	TRDSRVIF_AlertKey	Alert Key	UINT8	Static	1	AUTO	X
	TRDSRVIF_TransducerType	Transducer Type	ENUM16	Static	2		
	STD_SWOptionActiveOverview	Software option overview	BIT_ENUM32	Static	4		
	MDI_ModuleHardwareRevision	Hardware revision	STRING	Static	16	AUTO	X
	MDI_ModuleName	Module name	STRING	Static	16	AUTO	X
	MDI_ModuleAvailable	Resource available	UINT8	Static	1		
	MDI_ModuleBootloaderRevision	Bootloader revision	UINT32	Static	4		
	MDI_ModuleFirmwareBuildNumber	Build no. software	UINT16	Static	2		
	MDI_ModuleFirmwareRevision	Software revision	UINT32	Static	4		
	MDI_ModuleSerialNumber	Serial number	STRING	Static	16	AUTO	X
	MDI_ModuleSerialNumber	Serial number	STRING	Static	16	AUTO	X
	MDI_ModuleHardwareRevision	Hardware revision	STRING	Static	16	AUTO	X
	TRDSRVIF_View4_2	View -4-1	VIEW4	Static	114		
	TRDSRVIF_StRev	Static Revision	UINT16	Static	2		
	STD_UserLevel	Access status tooling	ENUM16	Static	2		
	MDI_ModuleHardwareRevision	Hardware revision	STRING	Static	16	AUTO	X
	MDI_ModuleName	Module name	STRING	Static	16	AUTO	X
	MDI_ModuleAvailable	Resource available	UINT8	Static	1		
	MDI_ModuleBootloaderRevision	Bootloader revision	UINT32	Static	4		
	MDI_ModuleFirmwareBuildNumber	Build no. software	UINT16	Static	2		
	MDI_ModuleFirmwareRevision	Software revision	UINT32	Static	4		
	MDI_ModuleSerialNumber	Serial number	STRING	Static	16	AUTO	X
	VTX_DSCID	DSC ID	STRING	Static	12	AUTO	X
	VTX_DSCSerialNumber	DSC sensor serial number	STRING	Static	15	AUTO	X
	VTX_MeterBodyID	Meter body ID	STRING	Static	12	AUTO	X
	VTX_MeterBodySerialNumber	Meter body serial number	STRING	Static	12	AUTO	X

17.1.14 Transducer Block Service Sensor

Relative Index	Name	Label	Data type	Storage Class	Size (Bytes)	MODE_BLK	Writability
11	TRDSRVSB_TransducerTypeVer		UINT16	Static	2		
12	TRDSRVSB_XdError	Transducer Error	ENUM8	Dynamic	1		
13	TRDSRVSB_CollectionDirectory	Collection Directory	UINT32	Static	4		
14	TRDSRVSB_BlockErrDesc_1	Block error description	BIT_ENUM32	Dynamic	4		
15	TRDSRVSB_STD_UserLevel_1	Access status tooling	ENUM16	Static	2		
16	TRDSRVSB_STD_LockingState_1	Locking status	BIT_ENUM16	Dynamic	2		
17	TRDSRVSB_STD_SWOptionActiveOverview_1	Software option overview	BIT_ENUM32	Static	4		
18	TRDSRVSB_Dev_DateTimeFormat_1	Date/time format	ENUM16	Static	2	AUTO	X
19	TRDSRVSB_VTX_Amplitude_1	Vortex amplitude	FLOAT	Static	4		
20	TRDSRVSB_VTX_DSCLeakageC0_1	Sensor leakage current	FLOAT	Static	4		
21	TRDSRVSB_VTX_DSCTemperaturePT1_1	DSC sensor temperature PT1	FLOAT	Static	4		
22	TRDSRVSB_VTX_DSCTemperaturePT2_1	DSC sensor temperature PT2	FLOAT	Static	4		
23	TRDSRVSB_VTX_GapCapacity_1	Gap capacity	FLOAT	Static	4		
24	TRDSRVSB_VTX_GapCapacityDelta_1	Gap capacity difference	FLOAT	Dynamic	4		
25	TRDSRVSB_Dev_CalTimeMinute_1	Minute	UINT8	Static	1	AUTO	X
26	TRDSRVSB_Dev_CalTimeHour_1	Hour	UINT8	Static	1	AUTO	X
27	TRDSRVSB_Dev_CalTimeDay_1	Day	UINT8	Static	1	AUTO	X
28	TRDSRVSB_Dev_CalTimeMonth_1	Month	ENUM16	Static	2	AUTO	X
29	TRDSRVSB_Dev_CalTimeYear_1	Year	UINT8	Static	1	AUTO	X
30	TRDSRVSB_Dev_CalHistoryCounter_1	Calibration counter	UINT32	Static	4	AUTO	X
31	TRDSRVSB_Dev_MapCalFactor_1	Calibration factor	FLOAT	Static	4	AUTO	X
32	TRDSRVSB_Dev_CalTimeString_1	Calibration date/ time	STRING	Static	20	AUTO	X
33	TRDSRVSB_Dev_CalHistoryEntryNum_1	Select calibration log entry	UINT8	Static	1	AUTO	
34	TRDSRVSB_Dev_CalTimeSelectedEntry_1	Timestamp	STRING	Static	20		
35	TRDSRVSB_Dev_CalFactorSelectedEntry_1	Calibration factor	FLOAT	Static	4		
36	TRDSRVSB_Dev_ConfirmCalibration_1	Confirm settings	ENUM16	Static	2	AUTO	X
37	TRDSRVSB_Dev_CalTimeAmPm_1	AM/PM	ENUM16	Static	2	AUTO	X
38	TRDSRVSB_Dev_CalHiLimitDays_1		UINT8	Static	1		
39	TRDSRVSB_Dev_CalLoLimitHours_1		UINT8	Static	1		
40	TRDSRVSB_Dev_CalHiLimitHours_1		UINT8	Static	1		
41	TRDSRVSB_VTX_CalibrationFactor_1	Calibration factor	FLOAT	Static	4	AUTO	X
42	TRDSRVSB_VTX_DSCAdjustment_1	Sensor adjustment	ENUM16	Static	2	AUTO	X
43	TRDSRVSB_VTX_DSPMode_1	DSP mode	BIT_ENUM32	Static	4	AUTO	X

Relative Index	Name	Label	Data type	Storage Class	Size (Bytes)	MODE_BLK	Writability
44	TRDSRVSB_VTX_FrequencyReferenceDrift_1	Reference frequency drift	FLOAT	Static	4		
45	TRDSRVSB_VTX_InnerDiameter_1	Tube inner diameter	FLOAT	Static	4	AUTO	X
46	TRDSRVSB_VTX_Kurtosis_1	Vortex kurtosis	FLOAT	Static	4		
47	TRDSRVSB_VTX_MaxVortexFrequencyGas_1	Max. vortex frequency gas	FLOAT	Static	4	AUTO	X
48	TRDSRVSB_VTX_MaxVortexFrequencyLiquid_1	Max. vortex frequency liquid	FLOAT	Static	4	AUTO	X
49	TRDSRVSB_VTX_MeterBodyProperties_1	Meter body properties	STRING	Static	32	AUTO	X
50	TRDSRVSB_VTX_MinVortexFrequencyGas_1	Min. vortex frequency gas	FLOAT	Static	4	AUTO	X
51	TRDSRVSB_VTX_MinVortexFrequencyLiquid_1	Min. vortex frequency liquid	FLOAT	Static	4	AUTO	X
52	TRDSRVSB_VTX_OverallRefCapacity_1	Overall reference capacity	FLOAT	Dynamic	4		
53	TRDSRVSB_VTX_ProcessResonanceFreq_1	Resonance frequency	FLOAT	Dynamic	4		
54	TRDSRVSB_VTX_SensorDiameter_1	Sensor diameter	FLOAT	Static	4	AUTO	X
55	TRDSRVSB_VTX_TemperatureCalcMode_1	Temperature calculation mode	ENUM16	Static	2	AUTO	X
56	TRDSRVSB_VTX_TemperatureRefPT1_1	Temperature reference 1	FLOAT	Static	4		
57	TRDSRVSB_VTX_TemperatureRefPT2_1	Temperature reference 2	FLOAT	Static	4		
58	TRDSRVSB_VTX_VortexMinFlowCoeff_1	Min. flow coefficient	FLOAT	Static	4	AUTO	X
59	TRDSRVSB_VTX_VPATemperature_1	Pre-amplifier temperature	FLOAT	Static	4		
60	TRDSRVSB_VTX_MediumSelector_1	Select medium	ENUM16	Static	2	AUTO	X
61	TRDSRVSB_VTX_Package_1	Sensor version	ENUM16	Static	2	AUTO	X
62	TRDSRVSB_HBT_VerificationStatus_1	Status	ENUM16	Dynamic	2		
63	TRDSRVSB_STD_FieldbusType_1	Fieldbus Type	ENUM8	Static	1		
64	TRDSRVSB_SU_Temperature_1	Temperature unit	ENUM16	Static	2	AUTO	X
	TRDSRVSB_View1	View -1-	VIEW1	Dynamic	19		
	TRDSRVSB_StRev	Static Revision	UINT16	Static	2		
	TRDSRVSB_BlockErr	Block Error	BIT_ENUM16	Dynamic	2		
	TRDSRVSB_TransducerType	Transducer Type	ENUM16	Static	2		
	TRDSRVSB_XdError	Transducer Error	ENUM8	Dynamic	1		
	TRDSRVSB_BlockErrDesc_1	Block error description	BIT_ENUM32	Dynamic	4		
	STD_LockingState	Locking status	BIT_ENUM16	Dynamic	2		
	HBT_VerificationStatus	Status	ENUM16	Dynamic	2		
	TRDSRVSB_View2	View -2-	VIEW2	Static	108		
	TRDSRVSB_StRev	Static Revision	UINT16	Static	2		
	TRDSRVSB_TransducerType	Transducer Type	ENUM16	Static	2		

Relative Index	Name	Label	Data type	Storage Class	Size (Bytes)	MODE_BLK	Writability
	STD_SWOptionActiveOverview	Software option overview	BIT_ENUM32	Static	4		
	Dev_DateTimeFormat	Date/time format	ENUM16	Static	2	AUTO	X
	VTX_Amplitude	Vortex amplitude	FLOAT	Static	4		
	VTX_DSCLeakageC0	Sensor leakage current	FLOAT	Static	4		
	VTX_DSCTemperaturePT1	DSC sensor temperature PT1	FLOAT	Static	4		
	VTX_DSCTemperaturePT2	DSC sensor temperature PT2	FLOAT	Static	4		
	Dev_CalTimeMinute	Minute	UINT8	Static	1	AUTO	X
	Dev_CalTimeHour	Hour	UINT8	Static	1	AUTO	X
	Dev_CalTimeDay	Day	UINT8	Static	1	AUTO	X
	Dev_CalTimeMonth	Month	ENUM16	Static	2	AUTO	X
	Dev_CalTimeYear	Year	UINT8	Static	1	AUTO	X
	Dev_CalHistoryCounter	Calibration counter	UINT32	Static	4	AUTO	X
	Dev_MapCalFactor	Calibration factor	FLOAT	Static	4	AUTO	X
	Dev_CalTimeString	Calibration date/ time	STRING	Static	20	AUTO	X
	Dev_CalHistoryEntryNum	Select calibration log entry	UINT8	Static	1	AUTO	
	Dev_CalTimeSelectedEntry	Timestamp	STRING	Static	20		
	Dev_CalFactorSelectedEntry	Calibration factor	FLOAT	Static	4		
	Dev_ConfirmCalibration	Confirm settings	ENUM16	Static	2	AUTO	X
	Dev_CalTimeAmPm	AM/PM	ENUM16	Static	2	AUTO	X
	Dev_CalHiLimitDays		UINT8	Static	1		
	Dev_CalLoLimitHours		UINT8	Static	1		
	Dev_CalHiLimitHours		UINT8	Static	1		
	VTX_CalibrationFactor	Calibration factor	FLOAT	Static	4	AUTO	X
	VTX_DSCAdjustment	Sensor adjustment	ENUM16	Static	2	AUTO	X
	VTX_DSPMode	DSP mode	BIT_ENUM32	Static	4	AUTO	X
	VTX_FrequencyReferenceDrift	Reference frequency drift	FLOAT	Static	4		
	SU_Temperature	Temperature unit	ENUM16	Static	2	AUTO	X
	TRDSRVSB_View3	View -3-	VIEW3	Dynamic	29		
	TRDSRVSB_StRev	Static Revision	UINT16	Static	2		
	TRDSRVSB_BlockErr	Block Error	BIT_ENUM16	Dynamic	2		
	TRDSRVSB_TransducerType	Transducer Type	ENUM16	Static	2		
	TRDSRVSB_XdError	Transducer Error	ENUM8	Dynamic	1		
	TRDSRVSB_BlockErrDesc_1	Block error description	BIT_ENUM32	Dynamic	4		
	STD_LockingState	Locking status	BIT_ENUM16	Dynamic	2		
	VTX_GapCapacityDelta	Gap capacity difference	FLOAT	Dynamic	4		

Relative Index	Name	Label	Data type	Storage Class	Size (Bytes)	MODE_BLK	Writability
	VTX_OverallRefCapacity	Overall reference capacity	FLOAT	Dynamic	4		
	VTX_ProcessResonanceFreq	Resonance frequency	FLOAT	Dynamic	4		
	TRDSRVSB_View4	View -4-	VIEW4	Static	99		
	TRDSRVSB_StRev	Static Revision	UINT16	Static	2		
	TRDSRVSB_Strategy	Strategy	UINT16	Static	2	AUTO	X
	TRDSRVSB_AlertKey	Alert Key	UINT8	Static	1	AUTO	X
	TRDSRVSB_TransducerType	Transducer Type	ENUM16	Static	2		
	STD_UserLevel	Access status tooling	ENUM16	Static	2		
	STD_SWOptionActiveOverview	Software option overview	BIT_ENUM32	Static	4		
	VTX_GapCapacity	Gap capacity	FLOAT	Static	4		
	VTX_InnerDiameter	Tube inner diameter	FLOAT	Static	4	AUTO	X
	VTX_Kurtosis	Vortex kurtosis	FLOAT	Static	4		
	VTX_MaxVortexFrequencyGas	Max. vortex frequency gas	FLOAT	Static	4	AUTO	X
	VTX_MaxVortexFrequencyLiquid	Max. vortex frequency liquid	FLOAT	Static	4	AUTO	X
	VTX_MeterBodyProperties	Meter body properties	STRING	Static	32	AUTO	X
	VTX_MinVortexFrequencyGas	Min. vortex frequency gas	FLOAT	Static	4	AUTO	X
	VTX_MinVortexFrequencyLiquid	Min. vortex frequency liquid	FLOAT	Static	4	AUTO	X
	VTX_SensorDiameter	Sensor diameter	FLOAT	Static	4	AUTO	X
	VTX_TemperatureCalcMode	Temperature calculation mode	ENUM16	Static	2	AUTO	X
	VTX_TemperatureRefPT1	Temperature reference 1	FLOAT	Static	4		
	VTX_TemperatureRefPT2	Temperature reference 2	FLOAT	Static	4		
	VTX_VortexMinFlowCoeff	Min. flow coefficient	FLOAT	Static	4	AUTO	X
	VTX_VPATemperature	Pre-amplifier temperature	FLOAT	Static	4		
	VTX_MediumSelector	Select medium	ENUM16	Static	2	AUTO	X
	VTX_Package	Sensor version	ENUM16	Static	2	AUTO	X

17.1.15 Transducer Block Setup

Relative Index	Name	Label	Data type	Storage Class	Size (Bytes)	MODE_BLK	Writability
11	TRDSUP_TransducerTypeVer		UINT16	Static	2		
12	TRDSUP_XdError	Transducer Error	ENUM8	Dynamic	1		
13	TRDSUP_CollectionDirectory	Collection Directory	UINT32	Static	4		

Relative Index	Name	Label	Data type	Storage Class	Size (Bytes)	MODE_BLK	Writability
14	TRDSUP_BlockErrDesc_1	Block error description	BIT_ENUM32	Dynamic	4		
15	TRDSUP_STD_UserLevel_1	Access status tooling	ENUM16	Static	2		
16	TRDSUP_STD_LockingState_1	Locking status	BIT_ENUM16	Dynamic	2		
17	TRDSUP_STD_SWOptionActiveOverview_1	Software option overview	BIT_ENUM32	Static	4		
18	TRDSUP_SU_CalorificValueMass_1	Calorific value unit	ENUM16	Static	2	AUTO	X
19	TRDSUP_SU_Energy_1	Energy unit	ENUM16	Static	2	AUTO	X
20	TRDSUP_SU_CalorificValue_1	Calorific value unit	ENUM16	Static	2	AUTO	X
21	TRDSUP_SU_Pressure_1	Pressure unit	ENUM16	Static	2	AUTO	X
22	TRDSUP_VTX_DensityCalcSelector_1	Density calculation	ENUM16	Static	2	AUTO	X
23	TRDSUP_FLOW_LowFlowHysteresis_1	Off value low flow cutoff	FLOAT	Static	4	AUTO	X
24	TRDSUP_VTX_EnthalpyCalcSelector_1	Enthalpy calculation	ENUM16	Static	2	AUTO	X
25	TRDSUP_FLOW_LowFlowLimit_1	On value low flow cutoff	FLOAT	Static	4	AUTO	X
26	TRDSUP_VTX_EnthalpyType_1	Enthalpy type	ENUM16	Static	2	AUTO	X
27	TRDSUP_VTX_FluidSelectorGas_1	Select gas type	ENUM16	Static	2	AUTO	X
28	TRDSUP_VTX_FluidSelectorLiquid_1	Select liquid type	ENUM16	Static	2	AUTO	X
29	TRDSUP_VTX_FluidSelectorSteam_1	Select steam type	ENUM16	Static	2	AUTO	X
30	TRDSUP_VTX_MediumSelector_1	Select medium	ENUM16	Static	2	AUTO	X
31	TRDSUP_VTX_SaturatedSteamCalcMode_1	Saturated steam calculation mode	ENUM16	Static	2	AUTO	X
32	TRDSUP_VTX_CalorificValueType_1	Calorific value type	ENUM16	Static	2	AUTO	X
33	TRDSUP_VTX_GasMixture_1	Gas mixture	BIT_ENUM32	Static	4	AUTO	X
34	TRDSUP_FLOW_FlowMonitoringSelector_1	Assign process variable	ENUM16	Static	2	AUTO	X
35	TRDSUP_SU_MassFlow_1	Mass flow unit	ENUM16	Static	2	AUTO	X
36	TRDSUP_SU_VolumeFlow_1	Volume flow unit	ENUM16	Static	2	AUTO	X
37	TRDSUP_SU_CorrVolumeFlow_1	Corrected volume flow unit	ENUM16	Static	2	AUTO	X
38	TRDSUP_SU_Density_1	Density unit	ENUM16	Static	2	AUTO	X
39	TRDSUP_SU_Temperature_1	Temperature unit	ENUM16	Static	2	AUTO	X
	TRDSUP_View1	View -1-	VIEW1	Dynamic	17		
	TRDSUP_StRev	Static Revision	UINT16	Static	2		
	TRDSUP_BlockErr	Block Error	BIT_ENUM16	Dynamic	2		
	TRDSUP_TransducerType	Transducer Type	ENUM16	Static	2		
	TRDSUP_XdError	Transducer Error	ENUM8	Dynamic	1		
	TRDSUP_BlockErrDesc_1	Block error description	BIT_ENUM32	Dynamic	4		
	STD_LockingState	Locking status	BIT_ENUM16	Dynamic	2		
	TRDSUP_View2	View -2-	VIEW2	Static	56		
	TRDSUP_StRev	Static Revision	UINT16	Static	2		
	TRDSUP_TransducerType	Transducer Type	ENUM16	Static	2		
	STD_UserLevel	Access status tooling	ENUM16	Static	2		

Relative Index	Name	Label	Data type	Storage Class	Size (Bytes)	MODE_BLK	Writability
	SU_CalorificValueMass	Calorific value unit	ENUM16	Static	2	AUTO	X
	SU_Energy	Energy unit	ENUM16	Static	2	AUTO	X
	SU_CalorificValue	Calorific value unit	ENUM16	Static	2	AUTO	X
	SU_Pressure	Pressure unit	ENUM16	Static	2	AUTO	X
	VTX_DensityCalcSelector	Density calculation	ENUM16	Static	2	AUTO	X
	FLOW_LowFlowHysteresis	Off value low flow cutoff	FLOAT	Static	4	AUTO	X
	VTX_EnthalpyCalcSelector	Enthalpy calculation	ENUM16	Static	2	AUTO	X
	FLOW_LowFlowLimit	On value low flow cutoff	FLOAT	Static	4	AUTO	X
	VTX_EnthalpyType	Enthalpy type	ENUM16	Static	2	AUTO	X
	VTX_FluidSelectorGas	Select gas type	ENUM16	Static	2	AUTO	X
	VTX_FluidSelectorLiquid	Select liquid type	ENUM16	Static	2	AUTO	X
	VTX_FluidSelectorSteam	Select steam type	ENUM16	Static	2	AUTO	X
	VTX_MediumSelector	Select medium	ENUM16	Static	2	AUTO	X
	VTX_SaturatedSteamCalcMode	Saturated steam calculation mode	ENUM16	Static	2	AUTO	X
	VTX_CalorificValueType	Calorific value type	ENUM16	Static	2	AUTO	X
	VTX_GasMixture	Gas mixture	BIT_ENUM32	Static	4	AUTO	X
	FLOW_FlowMonitoringSelector	Assign process variable	ENUM16	Static	2	AUTO	X
	SU_MassFlow	Mass flow unit	ENUM16	Static	2	AUTO	X
	SU_VolumeFlow	Volume flow unit	ENUM16	Static	2	AUTO	X
	SU_CorrVolumeFlow	Corrected volume flow unit	ENUM16	Static	2	AUTO	X
	SU_Density	Density unit	ENUM16	Static	2	AUTO	X
	SU_Temperature	Temperature unit	ENUM16	Static	2	AUTO	X
	TRDSUP_View3	View -3-	VIEW3	Dynamic	13		
	TRDSUP_StRev	Static Revision	UINT16	Static	2		
	TRDSUP_BlockErr	Block Error	BIT_ENUM16	Dynamic	2		
	TRDSUP_TransducerType	Transducer Type	ENUM16	Static	2		
	TRDSUP_XdError	Transducer Error	ENUM8	Dynamic	1		
	STD_LockingState	Locking status	BIT_ENUM16	Dynamic	2		
	TRDSUP_View4	View -4-	VIEW4	Static	11		
	TRDSUP_StRev	Static Revision	UINT16	Static	2		
	TRDSUP_Strategy	Strategy	UINT16	Static	2	AUTO	X
	TRDSUP_AlertKey	Alert Key	UINT8	Static	1	AUTO	X
	TRDSUP_TransducerType	Transducer Type	ENUM16	Static	2		
	STD_SWOptionActiveOverview	Software option overview	BIT_ENUM32	Static	4		

17.1.16 Transducer Block Total Inventory Counter

Relative Index	Name	Label	Data type	Storage Class	Size (Bytes)	MODE_BLK	Writability
11	TRDTIC_TransducerTypeVer		UINT16	Static	2		
12	TRDTIC_XdError	Transducer Error	ENUM8	Dynamic	1		
13	TRDTIC_CollectionDirectory	Collection Directory	UINT32	Static	4		
14	TRDTIC_BlockErrDesc_1	Block error description	BIT_ENUM32	Dynamic	4		
15	TRDTIC_TIC_Channel_1	Assign process variable	ENUM16	Static	2	AUTO	X
16	TRDTIC_TotalizerValue_1	Totalizer value 1	Standard	Dynamic	5		
	TRDTIC_StateTotalizer_1	Totalizer status	ENUM8	Dynamic	1		
	TIC_Value	Totalizer value	FLOAT	Dynamic	4	AUTO	X
17	TRDTIC_TIC_OverflowValue_1	Totalizer overflow	FLOAT	Dynamic	4	AUTO	X
18	TRDTIC_TIC_TotUnit_1	Unit totalizer	ENUM16	Static	2	AUTO	X
19	TRDTIC_TIC_Control_1	Control Totalizer	ENUM16	Static	2	AUTO	X
20	TRDTIC_TIC_PresetQuantity_1	Preset value	FLOAT	Static	4	AUTO	X
21	TRDTIC_TIC_FailsafeMode_1	Failure mode	ENUM16	Static	2	AUTO	X
22	TRDTIC_TIC_SumMode_1	Totalizer operation mode	ENUM16	Static	2	AUTO	X
23	TRDTIC_TIC_Channel_2	Assign process variable	ENUM16	Static	2	AUTO	X
24	TRDTIC_TotalizerValue_2	Totalizer value 2	Standard	Dynamic	5		
	TRDTIC_StateTotalizer_2	Totalizer status 2	ENUM8	Dynamic	1		
	TIC_Value	Totalizer value	FLOAT	Dynamic	4	AUTO	X
25	TRDTIC_TIC_OverflowValue_2	Totalizer overflow	FLOAT	Dynamic	4	AUTO	X
26	TRDTIC_TIC_TotUnit_2	Unit totalizer	ENUM16	Static	2	AUTO	X
27	TRDTIC_TIC_Control_2	Control Totalizer	ENUM16	Static	2	AUTO	X
28	TRDTIC_TIC_PresetQuantity_2	Preset value	FLOAT	Static	4	AUTO	X
29	TRDTIC_TIC_FailsafeMode_2	Failure mode	ENUM16	Static	2	AUTO	X
30	TRDTIC_TIC_SumMode_2	Totalizer operation mode	ENUM16	Static	2	AUTO	X
31	TRDTIC_TIC_Channel_3	Assign process variable	ENUM16	Static	2	AUTO	X
32	TRDTIC_TotalizerValue_3	Totalizer value 3	Standard	Dynamic	5		
	TRDTIC_StateTotalizer_3	Totalizer status 3	ENUM8	Dynamic	1		
	TIC_Value	Totalizer value	FLOAT	Dynamic	4	AUTO	X
33	TRDTIC_STD_SWOptionActiveOverview_1	Software option overview	BIT_ENUM32	Static	4		
34	TRDTIC_TIC_OverflowValue_3	Totalizer overflow	FLOAT	Dynamic	4	AUTO	X
35	TRDTIC_TIC_TotUnit_3	Unit totalizer	ENUM16	Static	2	AUTO	X
36	TRDTIC_TIC_Control_3	Control Totalizer	ENUM16	Static	2	AUTO	X
37	TRDTIC_TIC_PresetQuantity_3	Preset value	FLOAT	Static	4	AUTO	X
38	TRDTIC_TIC_FailsafeMode_3	Failure mode	ENUM16	Static	2	AUTO	X
39	TRDTIC_TIC_SumMode_3	Totalizer operation mode	ENUM16	Static	2	AUTO	X

Relative Index	Name	Label	Data type	Storage Class	Size (Bytes)	MODE_BLK	Writability
40	TRDTIC_Dev_ResetAllTotalizers_1	Reset all totalizers	ENUM16	Static	2	AUTO	X
41	TRDTIC_IC_Value_1	Totalizer value	FLOAT	Dynamic	4		
42	TRDTIC_IC_Overflow_1	Totalizer overflow	FLOAT	Dynamic	4		
43	TRDTIC_IC_TotUnit_1	Unit	ENUM16	Static	2	AUTO	
44	TRDTIC_STD_UserLevel_1	Access status tooling	ENUM16	Static	2		
45	TRDTIC_STD_LockingState_1	Locking status	BIT_ENUM16	Dynamic	2		
	TRDTIC_View1	View -1-	VIEW1	Dynamic	52		
	TRDTIC_StRev	Static Revision	UINT16	Static	2		
	TRDTIC_BlockErr	Block Error	BIT_ENUM16	Dynamic	2		
	TRDTIC_TransducerType	Transducer Type	ENUM16	Static	2		
	TRDTIC_XdError	Transducer Error	ENUM8	Dynamic	1		
	TRDTIC_BlockErrDesc_1	Block error description	BIT_ENUM32	Dynamic	4		
	TIC_OverflowValue	Totalizer overflow	FLOAT	Dynamic	4	AUTO	X
	TIC_OverflowValue	Totalizer overflow	FLOAT	Dynamic	4	AUTO	X
	TIC_OverflowValue	Totalizer overflow	FLOAT	Dynamic	4	AUTO	X
	IC_Value	Totalizer value	FLOAT	Dynamic	4		
	IC_Overflow	Totalizer overflow	FLOAT	Dynamic	4		
	STD_LockingState	Locking status	BIT_ENUM16	Dynamic	2		
	TRDTIC_View2	View -2-	VIEW2	Static	50		
	TRDTIC_StRev	Static Revision	UINT16	Static	2		
	TRDTIC_TransducerType	Transducer Type	ENUM16	Static	2		
	TIC_Channel	Assign process variable	ENUM16	Static	2	AUTO	X
	TIC_TotUnit	Unit totalizer	ENUM16	Static	2	AUTO	X
	TIC_Control	Control Totalizer	ENUM16	Static	2	AUTO	X
	TIC_PresetQuantity	Preset value	FLOAT	Static	4	AUTO	X
	TIC_FailsafeMode	Failure mode	ENUM16	Static	2	AUTO	X
	TIC_SumMode	Totalizer operation mode	ENUM16	Static	2	AUTO	X
	TIC_Channel	Assign process variable	ENUM16	Static	2	AUTO	X
	TIC_TotUnit	Unit totalizer	ENUM16	Static	2	AUTO	X
	TIC_Control	Control Totalizer	ENUM16	Static	2	AUTO	X
	TIC_PresetQuantity	Preset value	FLOAT	Static	4	AUTO	X
	TIC_FailsafeMode	Failure mode	ENUM16	Static	2	AUTO	X
	TIC_SumMode	Totalizer operation mode	ENUM16	Static	2	AUTO	X
	TIC_Channel	Assign process variable	ENUM16	Static	2	AUTO	X
	TIC_TotUnit	Unit totalizer	ENUM16	Static	2	AUTO	X
	TIC_Control	Control Totalizer	ENUM16	Static	2	AUTO	X
	TIC_PresetQuantity	Preset value	FLOAT	Static	4	AUTO	X
	TIC_FailsafeMode	Failure mode	ENUM16	Static	2	AUTO	X

Relative Index	Name	Label	Data type	Storage Class	Size (Bytes)	MODE_BLK	Writability
	TIC_SumMode	Totalizer operation mode	ENUM16	Static	2	AUTO	X
	IC_TotUnit	Unit	ENUM16	Static	2	AUTO	
	STD_UserLevel	Access status tooling	ENUM16	Static	2		
	TRDTIC_View3	View -3-	VIEW3	Dynamic	11		
	TRDTIC_StRev	Static Revision	UINT16	Static	2		
	TRDTIC_BlockErr	Block Error	BIT_ENUM16	Dynamic	2		
	TRDTIC_TransducerType	Transducer Type	ENUM16	Static	2		
	TRDTIC_XdError	Transducer Error	ENUM8	Dynamic	1		
	TRDTIC_View4	View -4-	VIEW4	Static	7		
	TRDTIC_StRev	Static Revision	UINT16	Static	2		
	TRDTIC_Strategy	Strategy	UINT16	Static	2	AUTO	X
	TRDTIC_AlertKey	Alert Key	UINT8	Static	1	AUTO	X
	TRDTIC_TransducerType	Transducer Type	ENUM16	Static	2		

17.2 Overview of the operating menu

The following tables provide an overview of the entire operating menu structure with menus and parameters. The page reference indicates where a description of the parameter can be found in the manual.

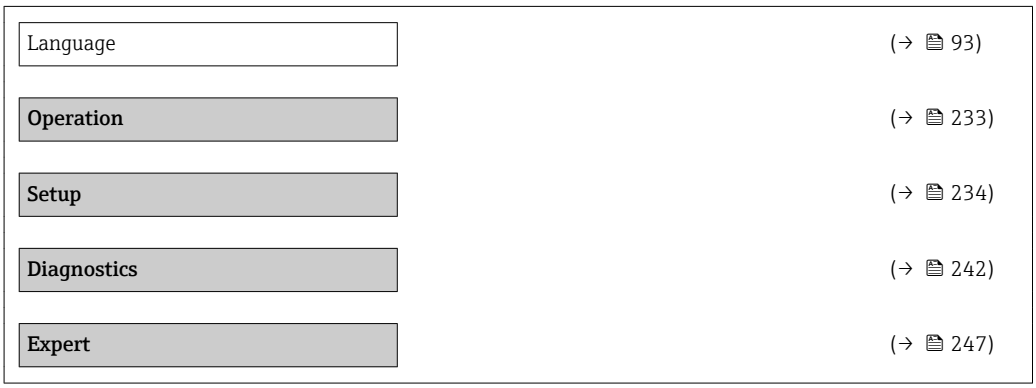

17.2.1 "Operation" menu

Navigation Operation

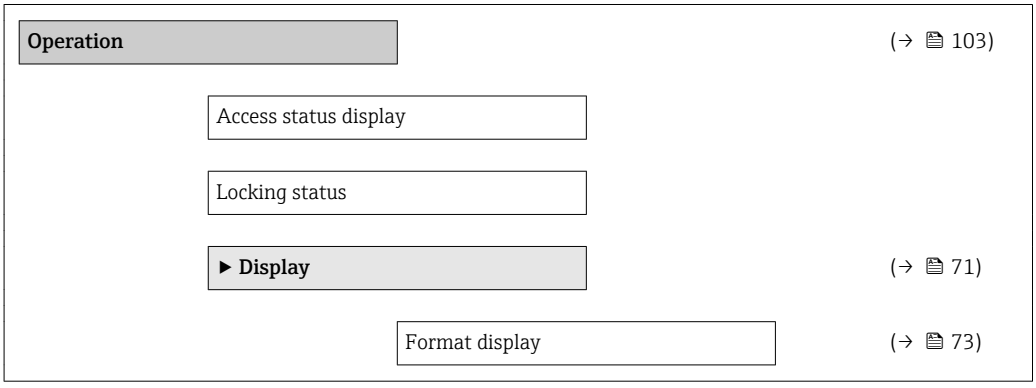

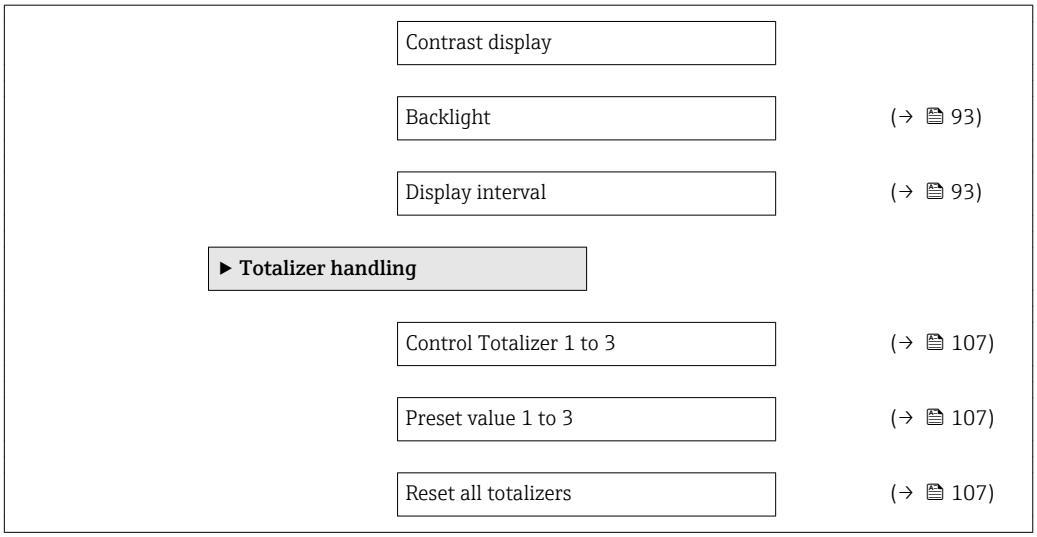

17.2.2 "Setup" menu

Navigation Setup

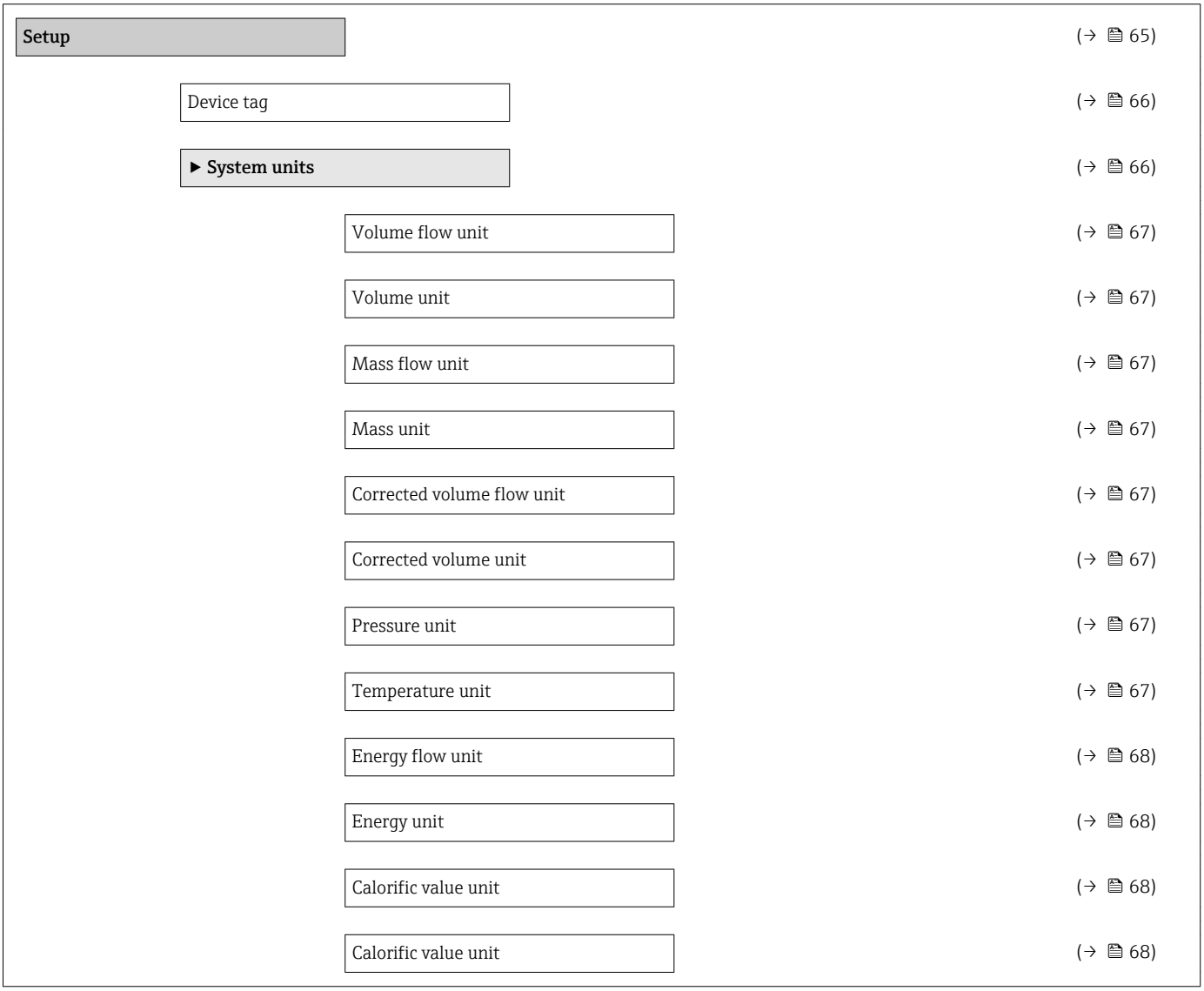

- Velocity unit (→ 68)
- Density unit (→ 68)
- Dynamic viscosity unit (→ 68)
- Length unit (→ 68)
- ▶ **Medium selection** (→ 69)
  - Select medium (→ 69)
  - Select gas type (→ 69)
  - Select liquid type (→ 70)
  - Select steam type (→ 70)
  - Enthalpy calculation (→ 70)
  - Density calculation (→ 70)
  - Enthalpy type (→ 70)
- ▶ **Analog inputs** (→ 71)
  - ▶ **Analog input 1 to 4**
    - Block tag (→ 71)
    - Channel (→ 71)
    - Process Value Filter Time (→ 71)
- ▶ **Display** (→ 71)
  - Format display (→ 73)
  - Value 1 display (→ 73)
  - 0% bargraph value 1 (→ 73)
  - 100% bargraph value 1 (→ 73)
  - Value 2 display (→ 73)
  - Value 3 display (→ 73)
  - 0% bargraph value 3 (→ 73)

- 100% bargraph value 3 (→ 73)
- Value 4 display (→ 73)
- ▶ **Low flow cut off** (→ 73)
  - Assign process variable (→ 74)
  - On value low flow cutoff (→ 74)
  - Off value low flow cutoff (→ 74)
- ▶ **Advanced setup** (→ 75)
  - Enter access code
  - ▶ **Medium properties** (→ 76)
    - Enthalpy type (→ 77)
    - Calorific value type (→ 77)
    - Reference combustion temperature (→ 77)
    - Reference density (→ 77)
    - Reference gross calorific value (→ 77)
    - Reference pressure (→ 77)
    - Reference temperature (→ 77)
    - Reference Z-factor (→ 77)
    - Linear expansion coefficient (→ 77)
    - Relative density (→ 77)
    - Specific heat capacity (→ 77)
    - Calorific value (→ 77)
    - Z-factor (→ 77)
    - Dynamic viscosity (→ 77)

Dynamic viscosity		(→ 77)
► **Gas composition**		(→ 77)
	Gas type	(→ 79)
	Gas mixture	(→ 79)
	Mol% Ar	(→ 79)
	Mol% C2H3Cl	(→ 79)
	Mol% C2H4	(→ 80)
	Mol% C2H6	(→ 80)
	Mol% C3H8	(→ 80)
	Mol% CH4	(→ 80)
	Mol% Cl2	(→ 80)
	Mol% CO	(→ 80)
	Mol% CO2	(→ 80)
	Mol% H2	(→ 80)
	Mol% H2O	(→ 80)
	Mol% H2S	(→ 80)
	Mol% HCl	(→ 80)
	Mol% He	(→ 80)
	Mol% i-C4H10	(→ 80)
	Mol% i-C5H12	(→ 80)
	Mol% Kr	(→ 80)
	Mol% N2	(→ 80)
	Mol% n-C10H22	(→ 80)
	Mol% n-C4H10	(→ 80)
	Mol% n-C5H12	(→ 80)

Mol% n-C6H14	(→ 80)
Mol% n-C7H16	(→ 80)
Mol% n-C8H18	(→ 80)
Mol% n-C9H20	(→ 80)
Mol% Ne	(→ 80)
Mol% NH3	(→ 80)
Mol% O2	(→ 81)
Mol% SO2	(→ 81)
Mol% Xe	(→ 81)
Mol% other gas	(→ 81)
Relative humidity	(→ 81)
▶ **External compensation**	(→ 81)
External value	(→ 81)
Atmospheric pressure	(→ 81)
Delta heat calculation	(→ 82)
Fixed density	(→ 82)
Fixed temperature	(→ 82)
2nd temperature delta heat	(→ 82)
Fixed process pressure	(→ 82)
Steam quality	(→ 82)
Steam quality value	(→ 82)
▶ **Sensor adjustment**	(→ 82)
Inlet configuration	(→ 82)
Inlet run	(→ 82)

	Mating pipe diameter	(→ 82)
	Installation factor	(→ 82)
▶ **Pulse/frequency/switch output**		(→ 83)
	Operating mode	(→ 83)
	Assign pulse output	(→ 83)
	Assign frequency output	(→ 86)
	Switch output function	(→ 88)
	Assign diagnostic behavior	(→ 88)
	Assign limit	(→ 89)
	Assign flow direction check	(→ 89)
	Assign status	(→ 89)
	Mass flow unit	(→ 86)
	Mass unit	(→ 84)
	Volume flow unit	(→ 86)
	Volume unit	(→ 84)
	Corrected volume flow unit	(→ 86)
	Corrected volume unit	(→ 84)
	Energy flow unit	(→ 86)
	Energy unit	(→ 84)
	Pressure unit	(→ 86)
	Velocity unit	(→ 86)
	Unit totalizer	(→ 89)
	Unit totalizer	(→ 89)
	Unit totalizer	(→ 89)
	Temperature unit	(→ 86)

	Value per pulse	(→ 84)
	Pulse width	(→ 84)
	Failure mode	(→ 84)
	Minimum frequency value	(→ 86)
	Maximum frequency value	(→ 86)
	Measuring value at minimum frequency	(→ 86)
	Measuring value at maximum frequency	(→ 87)
	Failure mode	(→ 87)
	Failure frequency	(→ 87)
	Switch-on value	(→ 90)
	Switch-off value	(→ 90)
	Switch-on delay	(→ 90)
	Switch-off delay	(→ 90)
	Failure mode	(→ 90)
	Invert output signal	(→ 84)
▶ **Totalizer 1 to 3**		(→ 90)
	Assign process variable	(→ 90)
	Unit totalizer	(→ 90)
	Failure mode	(→ 90)
▶ **Display**		(→ 71)
	Format display	(→ 73)
	Value 1 display	(→ 73)
	0% bargraph value 1	(→ 73)
	100% bargraph value 1	(→ 73)

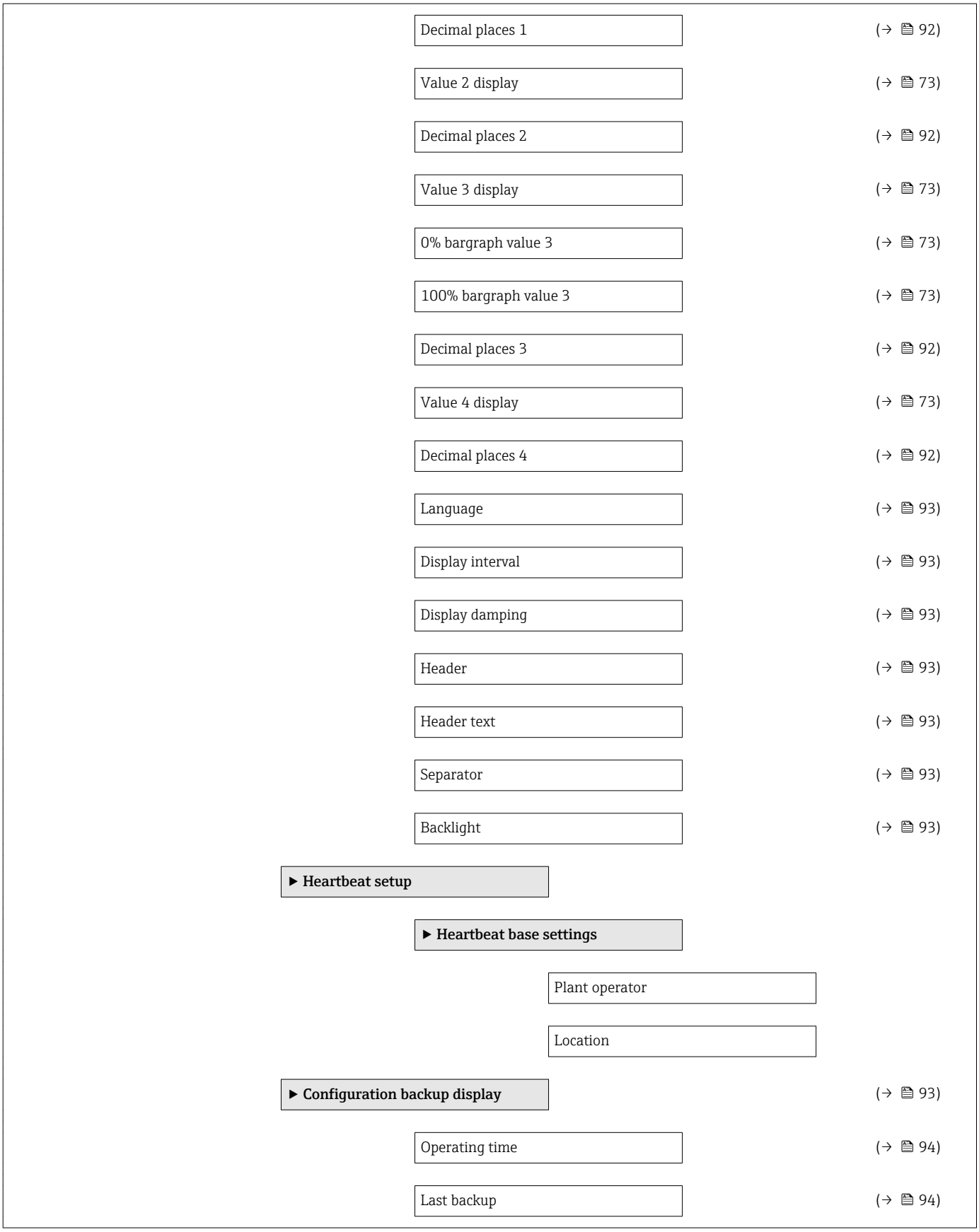
Decimal places 1
(→ 92)
Value 2 display
(→ 73)
Decimal places 2
(→ 92)
Value 3 display
(→ 73)
0% bargraph value 3
(→ 73)
100% bargraph value 3
(→ 73)
Decimal places 3
(→ 92)
Value 4 display
(→ 73)
Decimal places 4
(→ 92)
Language
(→ 93)
Display interval
(→ 93)
Display damping
(→ 93)
Header
(→ 93)
Header text
(→ 93)
Separator
(→ 93)
Backlight
(→ 93)
▶ Heartbeat setup
▶ Heartbeat base settings
Plant operator
Location
▶ Configuration backup display
(→ 93)
Operating time
(→ 94)
Last backup
(→ 94)

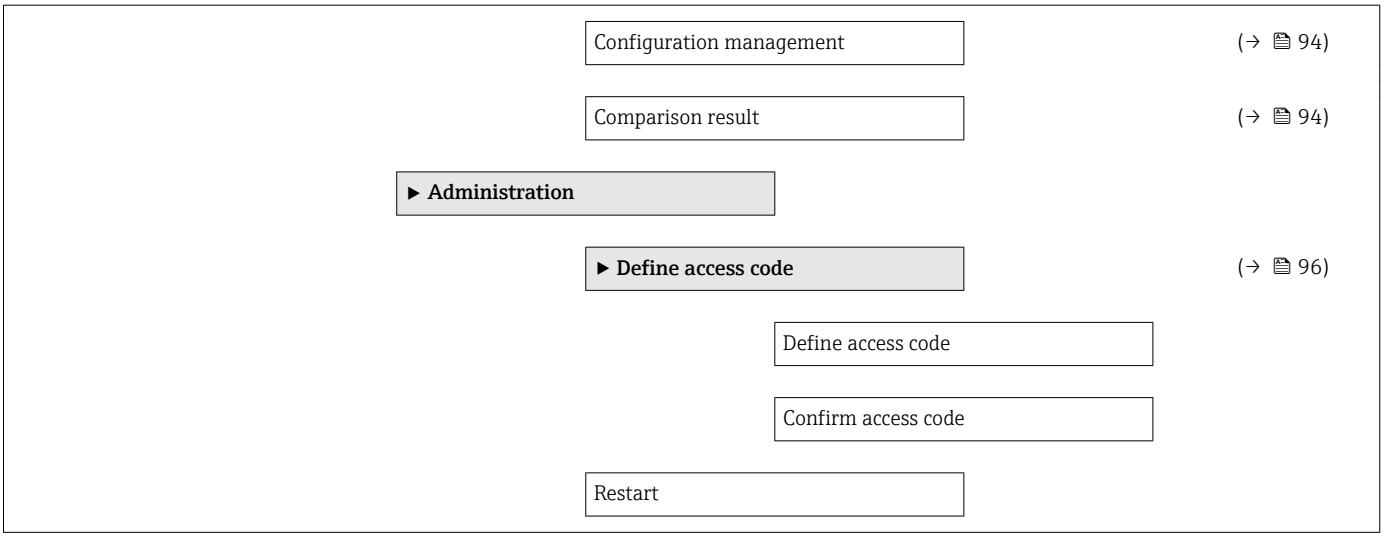

17.2.3 "Diagnostics" menu

Navigation Diagnostics

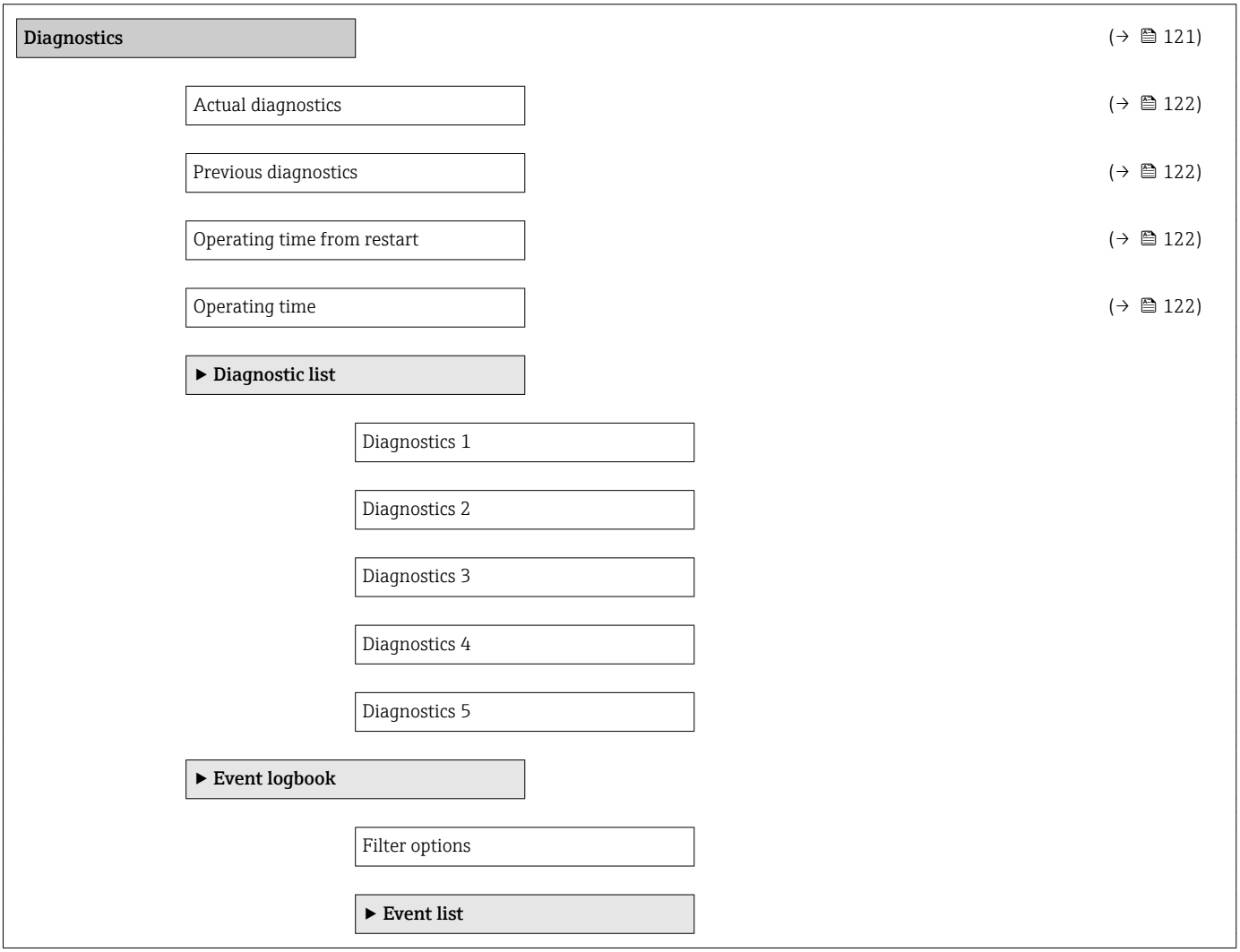

- ▶ **Device information** (→ 124)
  - Device tag (→ 125)
  - Serial number (→ 125)
  - Firmware version (→ 125)
  - Order code (→ 125)
  - Extended order code 1 (→ 125)
  - Extended order code 2 (→ 125)
  - Device Revision (→ 125)
  - Device Type (→ 125)
- ▶ **Measured values**
  - ▶ **Process variables** (→ 103)
    - Volume flow (→ 104)
    - Corrected volume flow (→ 104)
    - Mass flow (→ 104)
    - Flow velocity (→ 104)
    - Temperature (→ 104)
    - Calculated saturated steam pressure (→ 104)
    - Steam quality (→ 104)
    - Total mass flow (→ 104)
    - Condensate mass flow (→ 104)
    - Energy flow (→ 104)
    - Heat flow difference (→ 104)
    - Reynolds number (→ 104)
    - Density (→ 104)

- Pressure (→ 104)
- Compressibility factor (→ 104)
- ▶ **Totalizer** (→ 90)
  - Totalizer value 1 to 3 (→ 105)
  - Totalizer overflow 1 to 3 (→ 105)
- ▶ **Output values** (→ 105)
  - Terminal voltage 1 (→ 106)
  - Pulse output (→ 106)
  - Output frequency (→ 106)
  - Switch status (→ 106)
- ▶ **Analog inputs** (→ 71)
  - ▶ **Analog input 1 to 4**
    - Block tag (→ 71)
    - Channel (→ 71)
    - Status
    - Value
    - Units index
- ▶ **Digital inputs**
  - ▶ **Digital input 1 to 2**
    - Block tag
    - Channel
    - Status
    - Value
- ▶ **Data logging** (→ 107)
  - Assign channel 1 (→ 108)

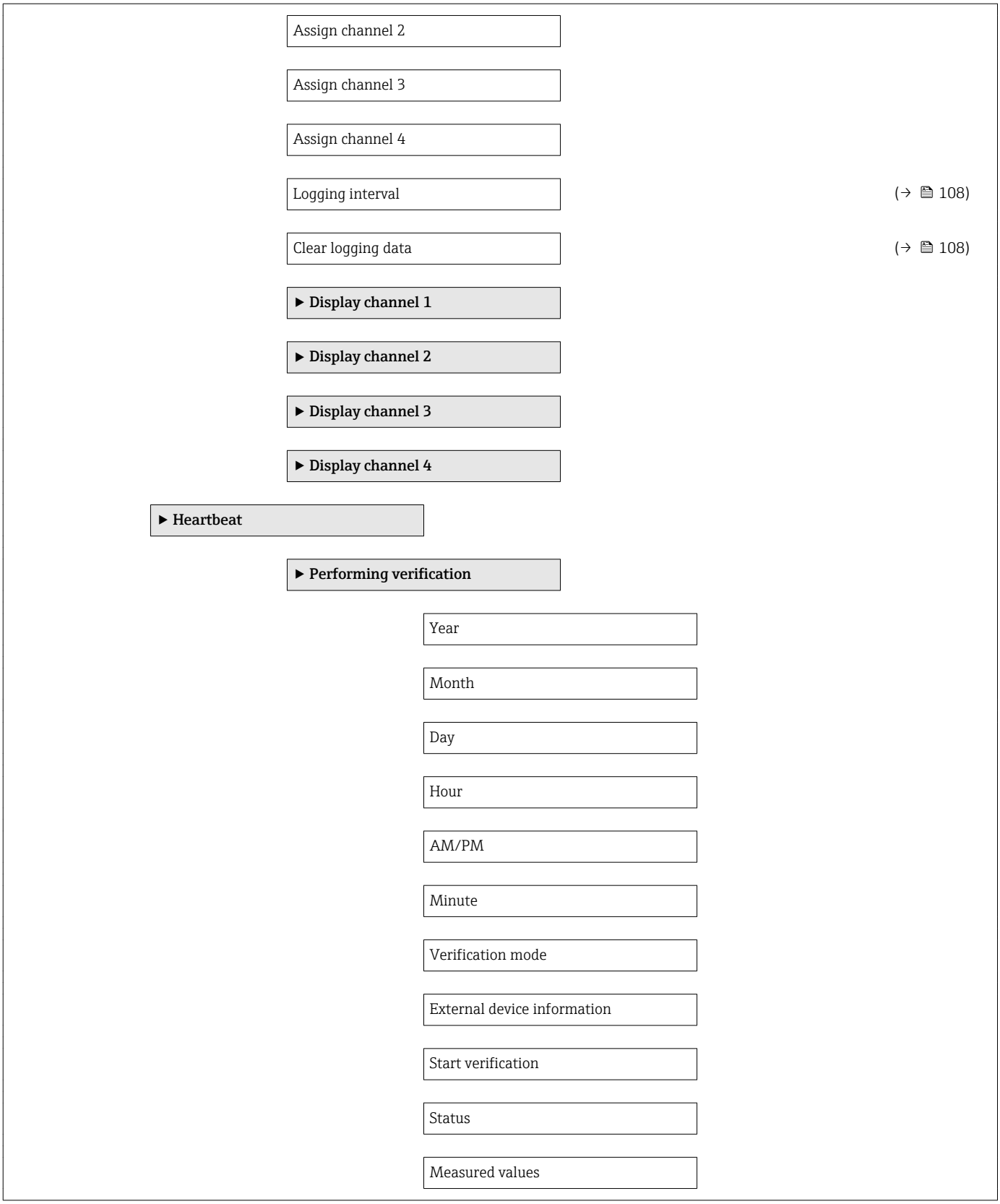
Assign channel 2
Assign channel 3
Assign channel 4
Logging interval
(→ 108)
Clear logging data
(→ 108)
▶ Display channel 1
▶ Display channel 2
▶ Display channel 3
▶ Display channel 4
▶ Heartbeat
▶ Performing verification
Year
Month
Day
Hour
AM/PM
Minute
Verification mode
External device information
Start verification
Status
Measured values

Output values

Overall result

► **Verification results**

Date/time

Verification ID

Operating time

Overall result

Sensor

Pre-amplifier module

Main electronic module

I/O module

► **Simulation** (→ 🖹 94)

Assign simulation process variable (→ 🖹 95)

Value process variable (→ 🖹 95)

Frequency simulation (→ 🖹 95)

Frequency value (→ 🖹 96)

Pulse simulation (→ 🖹 96)

Pulse value (→ 🖹 96)

Switch output simulation (→ 🖹 96)

Switch status (→ 🖹 96)

Simulation device alarm (→ 🖹 96)

Simulation diagnostic event

Diagnostic event category (→ 🖹 96)

Simulation diagnostic event (→ 🖹 0)

17.2.4 "Expert" menu

The following tables provide an overview of the **Expert** menu with its submenus and parameters. The direct access code to the parameter is given in brackets. The page reference indicates where a description of the parameter can be found in the manual.

Navigation Expert

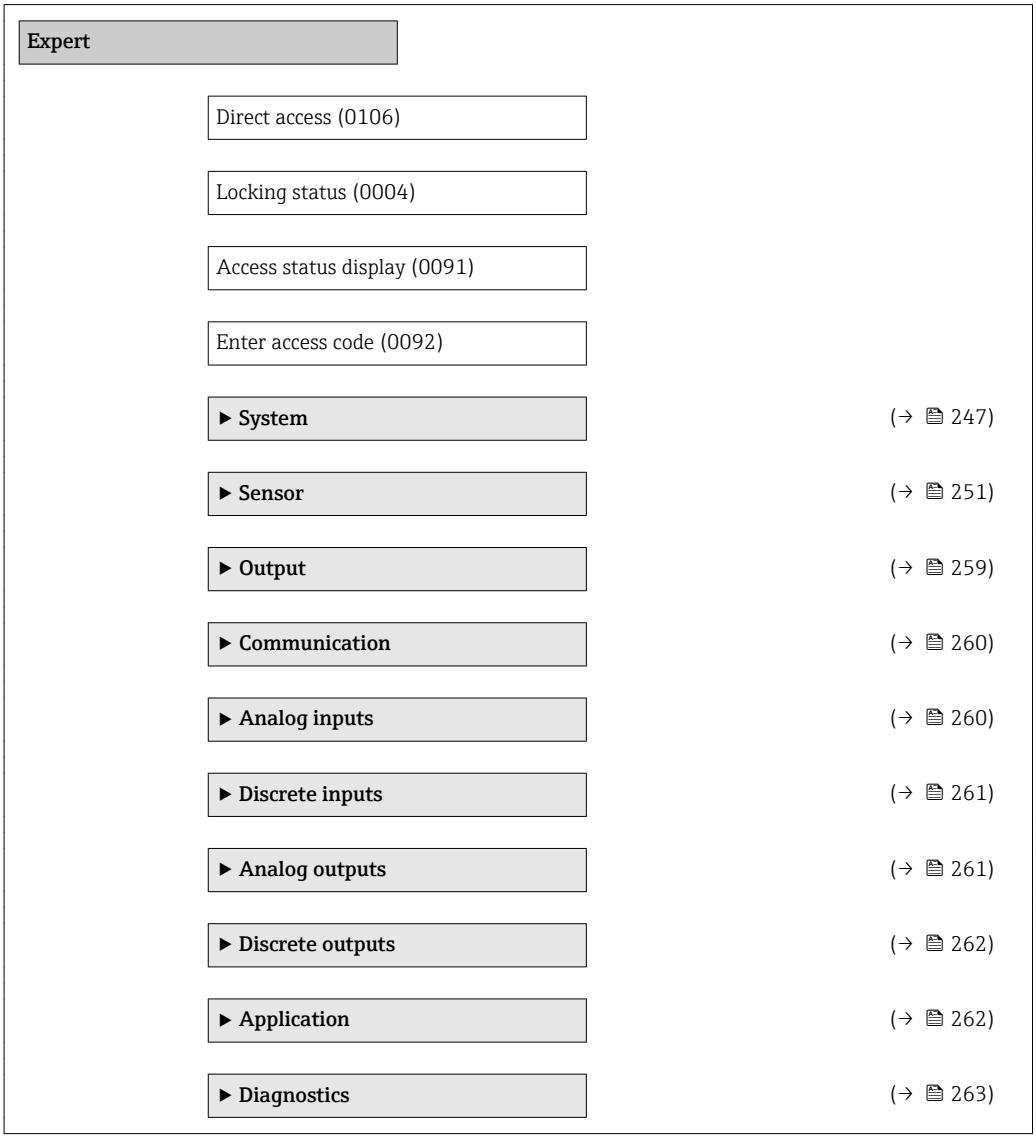

"System" submenu

Navigation Expert → System

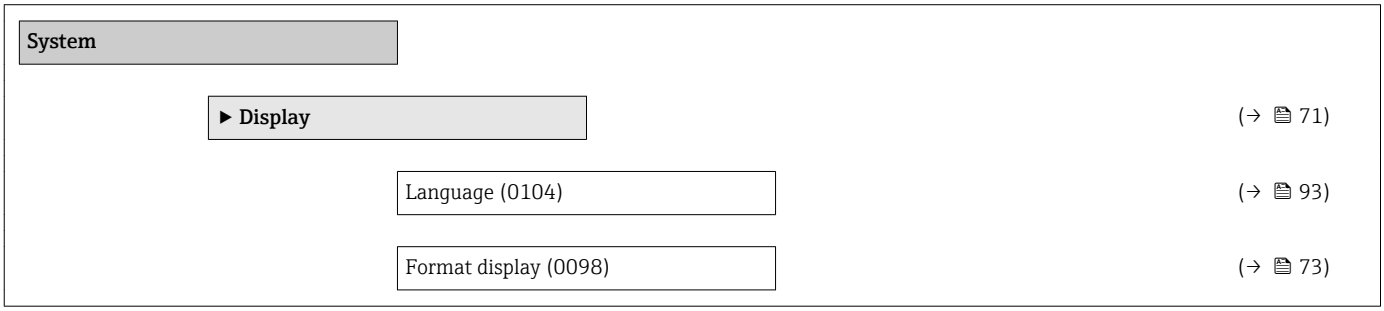

Value 1 display (0107)	(→ 73)
0% bargraph value 1 (0123)	(→ 73)
100% bargraph value 1 (0125)	(→ 73)
Decimal places 1 (0095)	(→ 92)
Value 2 display (0108)	(→ 73)
Decimal places 2 (0117)	(→ 92)
Value 3 display (0110)	(→ 73)
0% bargraph value 3 (0124)	(→ 73)
100% bargraph value 3 (0126)	(→ 73)
Decimal places 3 (0118)	(→ 92)
Value 4 display (0109)	(→ 73)
Decimal places 4 (0119)	(→ 92)
Display interval (0096)	(→ 93)
Display damping (0094)	(→ 93)
Header (0097)	(→ 93)
Header text (0112)	(→ 93)
Separator (0101)	(→ 93)
Contrast display (0105)	
Backlight (0111)	(→ 93)
Access status display (0091)	
▶ **Configuration backup display**	(→ 93)
Operating time (0652)	(→ 94)
Last backup (0102)	(→ 94)
Configuration management (0100)	(→ 94)
Comparison result (0103)	(→ 94)

► Diagnostic handling
Alarm delay (0651)
► Diagnostic behavior
Assign behavior of diagnostic no. 022 (0751)
Assign behavior of diagnostic no. 122 (0752)
Assign behavior of diagnostic no. 350 (0756)
Assign behavior of diagnostic no. 371 (0757)
Assign behavior of diagnostic no. 442 (0658)
Assign behavior of diagnostic no. 443 (0659)
Assign behavior of diagnostic no. 828 (0755)
Assign behavior of diagnostic no. 829 (0754)
Assign behavior of diagnostic no. 832 (0675)
Assign behavior of diagnostic no. 833 (0676)
Assign behavior of diagnostic no. 834 (0677)
Assign behavior of diagnostic no. 835 (0678)
Assign behavior of diagnostic no. 841 (0729)
Assign behavior of diagnostic no. 844 (0747)
Assign behavior of diagnostic no. 870 (0726)
Assign behavior of diagnostic no. 871 (0748)

Assign behavior of diagnostic no. 872 (0746)

Assign behavior of diagnostic no. 873 (0749)

Assign behavior of diagnostic no. 945 (0750)

Assign behavior of diagnostic no. 947 (0753)

Assign status of diagnostic number 022 (11041)

Assign status of diagnostic number 122 (11042)

Assign status of diagnostic number 350 (11000)

Assign status of diagnostic number 371 (11014)

Assign status of diagnostic number 828 (11015)

Assign status of diagnostic number 829 (11001)

Assign status of diagnostic number 832 (11002)

Assign status of diagnostic number 833 (11003)

Assign status of diagnostic number 834 (11004)

Assign status of diagnostic number 835 (11005)

Assign status of diagnostic number 841 (11006)

Assign status of diagnostic number 844 (11007)

Assign status of diagnostic number 870 (11008)

Assign status of diagnostic number 871 (11009)

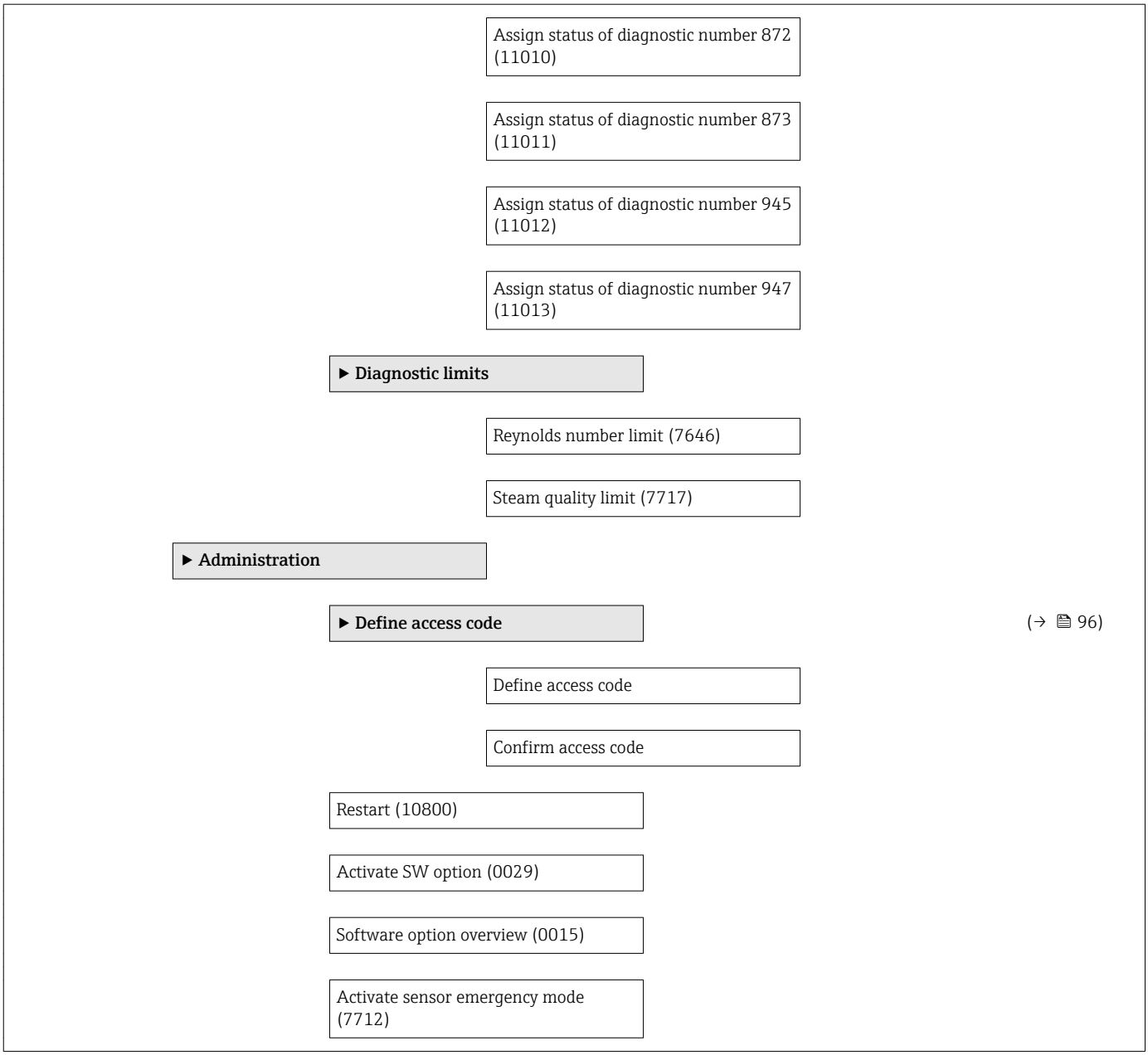

"Sensor" submenu

Navigation Expert → Sensor

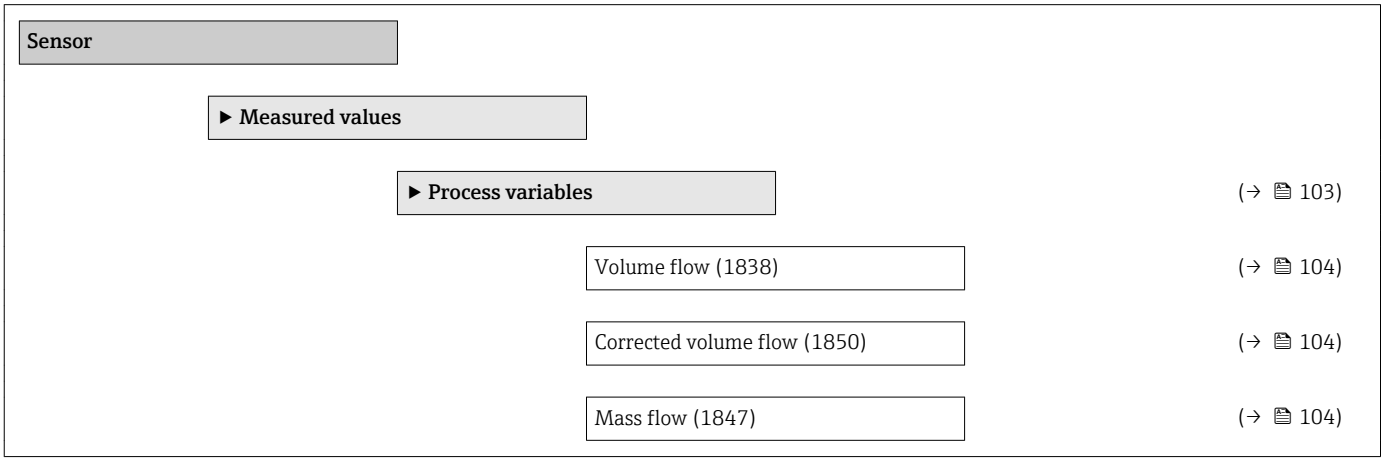

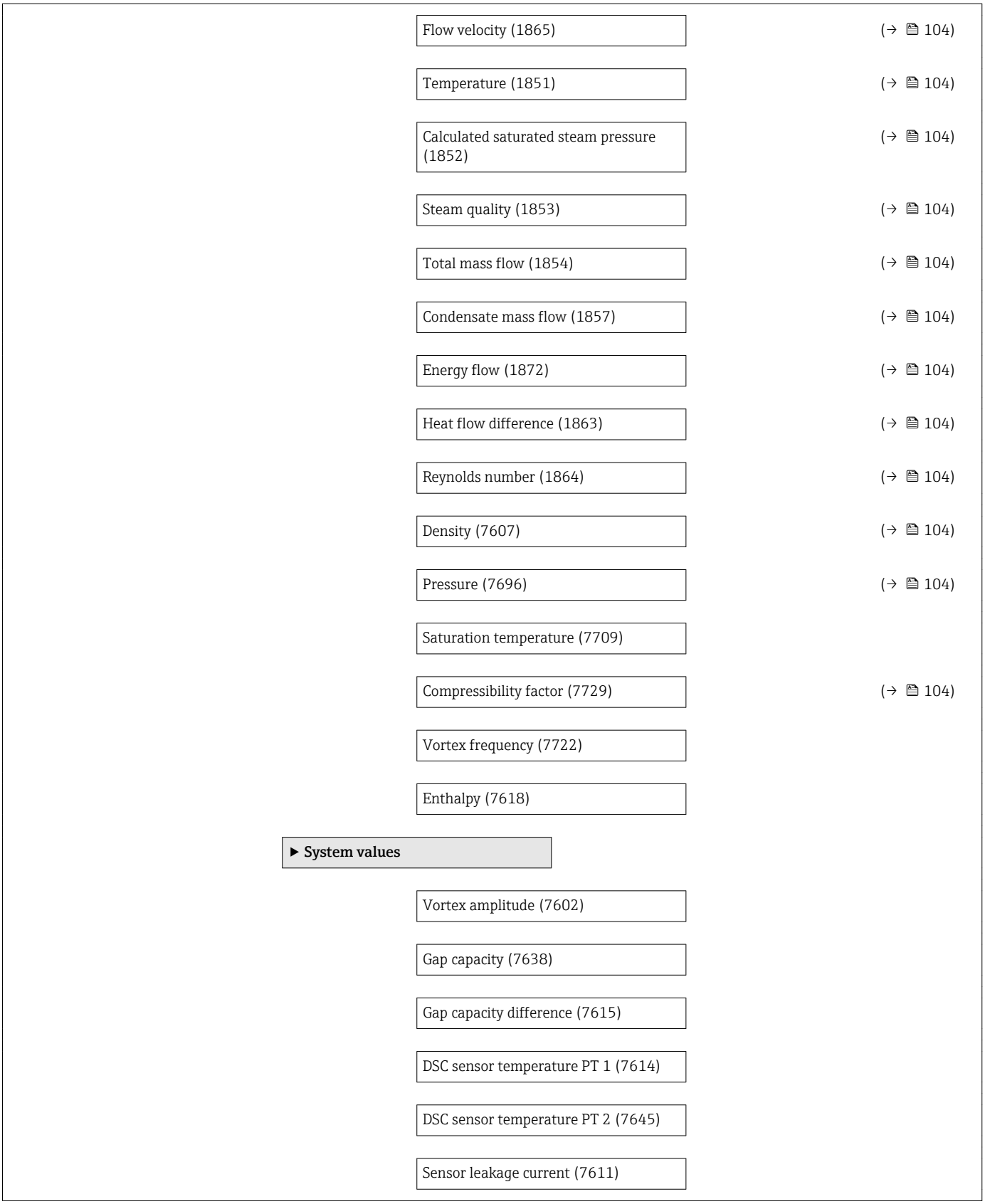
Flow velocity (1865)
(→ 104)
Temperature (1851)
(→ 104)
Calculated saturated steam pressure (1852)
(→ 104)
Steam quality (1853)
(→ 104)
Total mass flow (1854)
(→ 104)
Condensate mass flow (1857)
(→ 104)
Energy flow (1872)
(→ 104)
Heat flow difference (1863)
(→ 104)
Reynolds number (1864)
(→ 104)
Density (7607)
(→ 104)
Pressure (7696)
(→ 104)
Saturation temperature (7709)
Compressibility factor (7729)
(→ 104)
Vortex frequency (7722)
Enthalpy (7618)
▶ System values
Vortex amplitude (7602)
Gap capacity (7638)
Gap capacity difference (7615)
DSC sensor temperature PT 1 (7614)
DSC sensor temperature PT 2 (7645)
Sensor leakage current (7611)

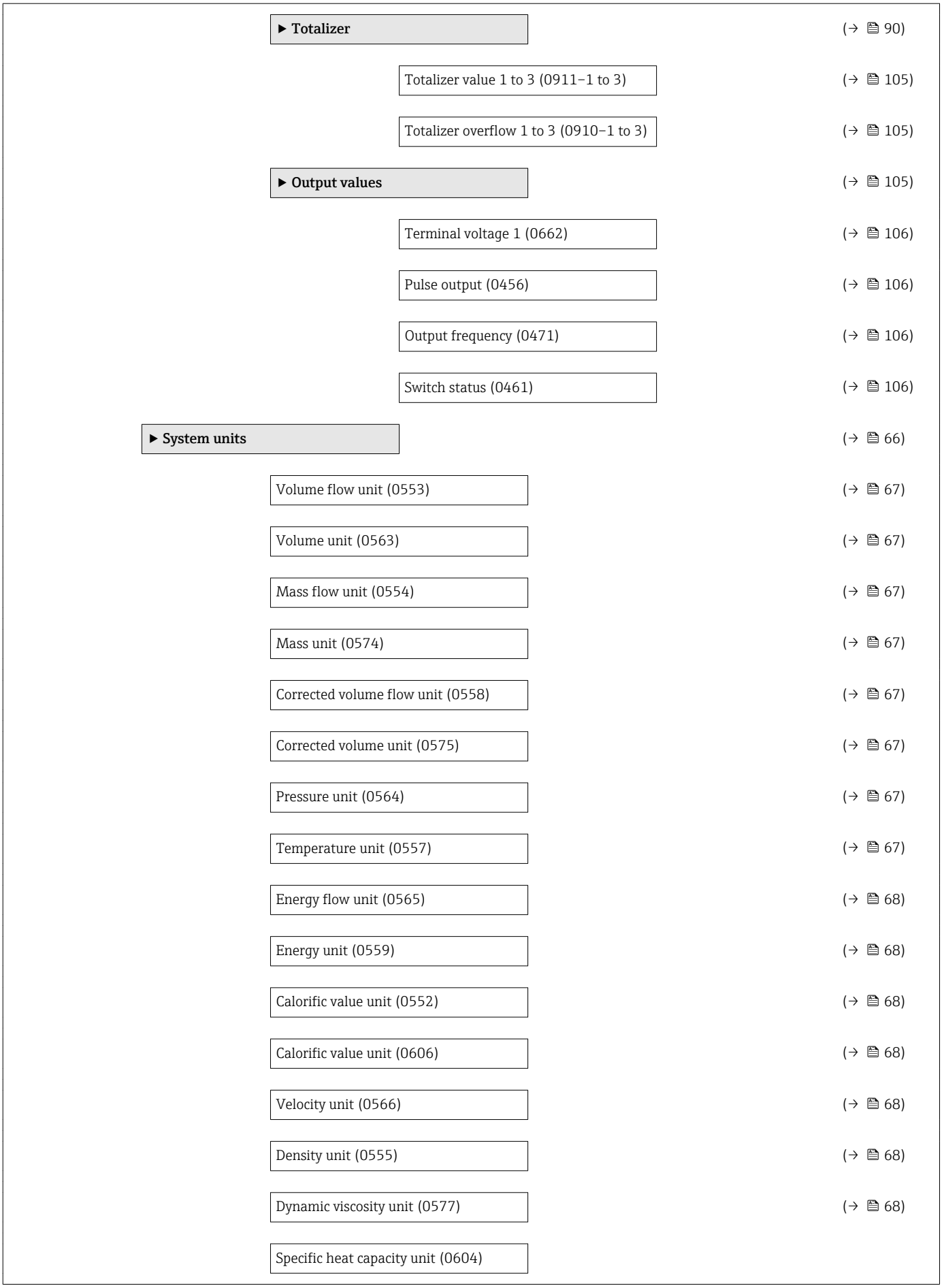
▶ Totalizer
(→ 90)
Totalizer value 1 to 3 (0911–1 to 3)
(→ 105)
Totalizer overflow 1 to 3 (0910–1 to 3)
(→ 105)
▶ Output values
(→ 105)
Terminal voltage 1 (0662)
(→ 106)
Pulse output (0456)
(→ 106)
Output frequency (0471)
(→ 106)
Switch status (0461)
(→ 106)
▶ System units
(→ 66)
Volume flow unit (0553)
(→ 67)
Volume unit (0563)
(→ 67)
Mass flow unit (0554)
(→ 67)
Mass unit (0574)
(→ 67)
Corrected volume flow unit (0558)
(→ 67)
Corrected volume unit (0575)
(→ 67)
Pressure unit (0564)
(→ 67)
Temperature unit (0557)
(→ 67)
Energy flow unit (0565)
(→ 68)
Energy unit (0559)
(→ 68)
Calorific value unit (0552)
(→ 68)
Calorific value unit (0606)
(→ 68)
Velocity unit (0566)
(→ 68)
Density unit (0555)
(→ 68)
Dynamic viscosity unit (0577)
(→ 68)
Specific heat capacity unit (0604)

Specific enthalpy unit (0607)

Length unit (0551) (→ 68)

Date/time format (2812)

▶ **Process parameters**

Flow override (1839)

Flow damping (1802)

▶ **Low flow cut off** (→ 73)

Assign process variable (1837) (→ 74)

On value low flow cutoff (1805) (→ 74)

Off value low flow cutoff (1804) (→ 74)

▶ **Measurement mode**

Select medium (7653) (→ 69)

Select gas type (7635) (→ 69)

Select liquid type (7636) (→ 70)

Select steam type (7637) (→ 70)

Density calculation (7608) (→ 70)

Enthalpy calculation (7619) (→ 70)

Saturated steam calculation mode (7708)

▶ **Medium properties** (→ 76)

Enthalpy type (7620) (→ 77)

Calorific value type (7698) (→ 77)

Reference combustion temperature (7699) (→ 77)

Reference density (7700) (→ 77)

Reference gross calorific value (7701) (→ 77)

- Reference pressure (7702) (→ 77)
- Reference temperature (7703) (→ 77)
- Reference Z-factor (7704) (→ 77)
- Linear expansion coefficient (7621) (→ 77)
- Relative density (7705) (→ 77)
- Specific heat capacity (7716) (→ 77)
- Calorific value (7626) (→ 77)
- Z-factor (7631) (→ 77)
- Dynamic viscosity (7733) (→ 77)
- Dynamic viscosity (7732) (→ 77)
- ▶ **Gas composition** (→ 77)
  - Gas type (7714) (→ 79)
  - Gas mixture (7640) (→ 79)
  - Mol% Ar (7663) (→ 79)
  - Mol% C2H3Cl (7664) (→ 79)
  - Mol% C2H4 (7665) (→ 80)
  - Mol% C2H6 (7666) (→ 80)
  - Mol% C3H8 (7667) (→ 80)
  - Mol% CH4 (7668) (→ 80)
  - Mol% Cl2 (7707) (→ 80)
  - Mol% CO (7669) (→ 80)
  - Mol% CO2 (7670) (→ 80)
  - Mol% H2 (7671) (→ 80)
  - Mol% H2O (7672) (→ 80)
  - Mol% H2S (7673) (→ 80)

	Mol% HCl (7674)	(→ 80)
	Mol% He (7675)	(→ 80)
	Mol% i-C4H10 (7676)	(→ 80)
	Mol% i-C5H12 (7677)	(→ 80)
	Mol% Kr (7678)	(→ 80)
	Mol% N2 (7679)	(→ 80)
	Mol% n-C10H22 (7680)	(→ 80)
	Mol% n-C4H10 (7681)	(→ 80)
	Mol% n-C5H12 (7682)	(→ 80)
	Mol% n-C6H14 (7683)	(→ 80)
	Mol% n-C7H16 (7684)	(→ 80)
	Mol% n-C8H18 (7685)	(→ 80)
	Mol% n-C9H20 (7686)	(→ 80)
	Mol% Ne (7687)	(→ 80)
	Mol% NH3 (7688)	(→ 80)
	Mol% O2 (7689)	(→ 81)
	Mol% SO2 (7691)	(→ 81)
	Mol% Xe (7692)	(→ 81)
	Mol% other gas (7690)	(→ 81)
	Relative humidity (7731)	(→ 81)
▶ **External compensation**		(→ 81)
External value (7622)		(→ 81)
Atmospheric pressure (7601)		(→ 81)
Delta heat calculation (7736)		(→ 82)
Fixed density (7627)		(→ 82)

Fixed temperature (7628) (→ 82)

2nd temperature delta heat (7625) (→ 82)

Fixed process pressure (7629) (→ 82)

Steam quality (7605) (→ 82)

Steam quality value (7630) (→ 82)

▶ Sensor adjustment (→ 82)

Inlet configuration (7641) (→ 82)

Inlet run (7642) (→ 82)

Mating pipe diameter (7648) (→ 82)

Installation factor (7616) (→ 82)

Temperature calculation mode (7659)

Min. flow coefficient (7662)

Min. vortex frequency liquid (7656)

Max. vortex frequency liquid (7650)

Min. vortex frequency gas (7652)

Max. vortex frequency gas (7649)

Sensor adjustment (7734)

DSP mode (7730)

▶ Calibration

Calibration factor (7604)

Meter body properties (7658)

Tube inner diameter (7643)

Sensor diameter (7711)

Calibration date/time (2822)

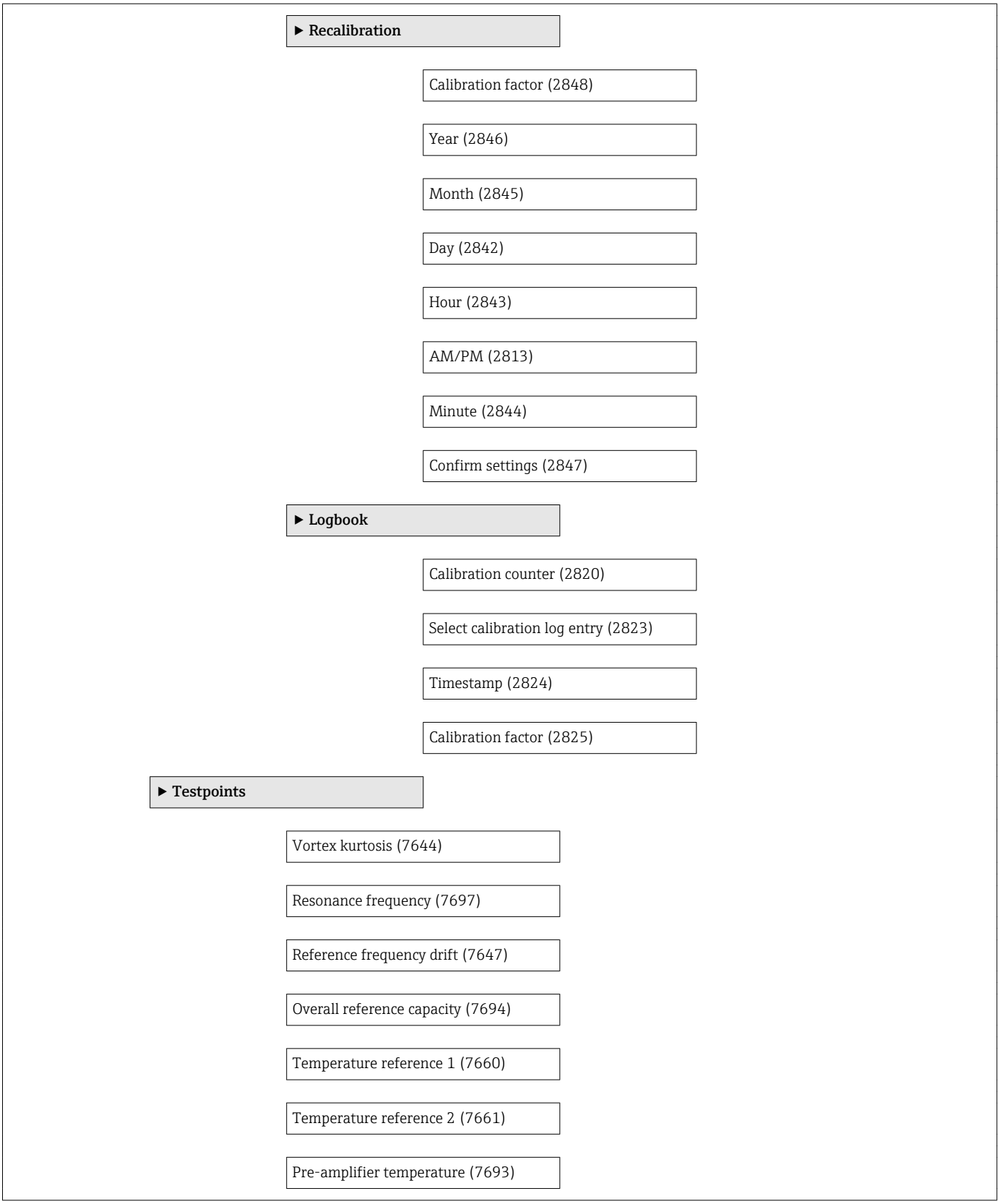
▶ Recalibration
Calibration factor (2848)
Year (2846)
Month (2845)
Day (2842)
Hour (2843)
AM/PM (2813)
Minute (2844)
Confirm settings (2847)
▶ Logbook
Calibration counter (2820)
Select calibration log entry (2823)
Timestamp (2824)
Calibration factor (2825)
▶ Testpoints
Vortex kurtosis (7644)
Resonance frequency (7697)
Reference frequency drift (7647)
Overall reference capacity (7694)
Temperature reference 1 (7660)
Temperature reference 2 (7661)
Pre-amplifier temperature (7693)

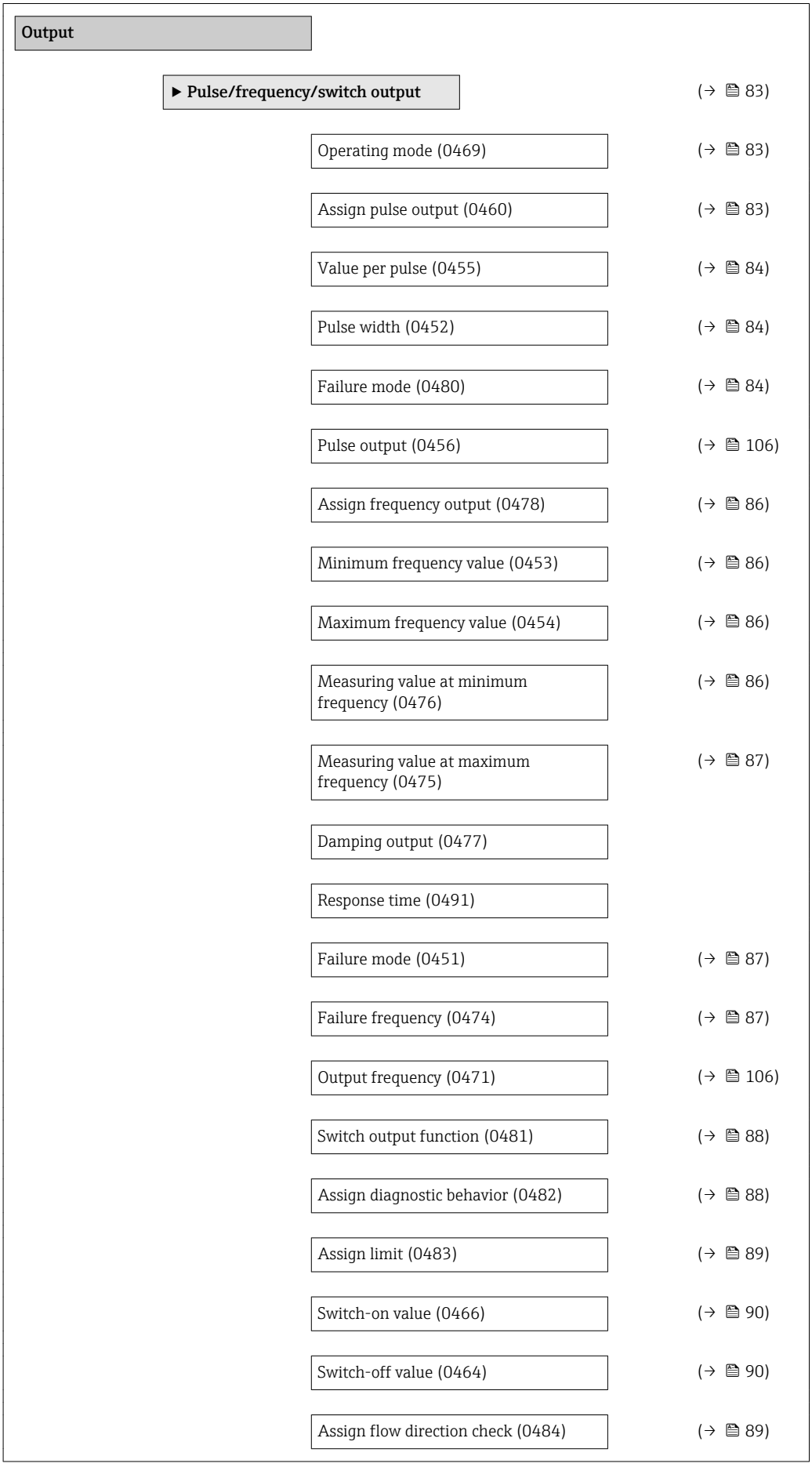
Output
▶ Pulse/frequency/switch output
(→ 83)
Operating mode (0469)
(→ 83)
Assign pulse output (0460)
(→ 83)
Value per pulse (0455)
(→ 84)
Pulse width (0452)
(→ 84)
Failure mode (0480)
(→ 84)
Pulse output (0456)
(→ 106)
Assign frequency output (0478)
(→ 86)
Minimum frequency value (0453)
(→ 86)
Maximum frequency value (0454)
(→ 86)
Measuring value at minimum frequency (0476)
(→ 86)
Measuring value at maximum frequency (0475)
(→ 87)
Damping output (0477)
Response time (0491)
Failure mode (0451)
(→ 87)
Failure frequency (0474)
(→ 87)
Output frequency (0471)
(→ 106)
Switch output function (0481)
(→ 88)
Assign diagnostic behavior (0482)
(→ 88)
Assign limit (0483)
(→ 89)
Switch-on value (0466)
(→ 90)
Switch-off value (0464)
(→ 90)
Assign flow direction check (0484)
(→ 89)

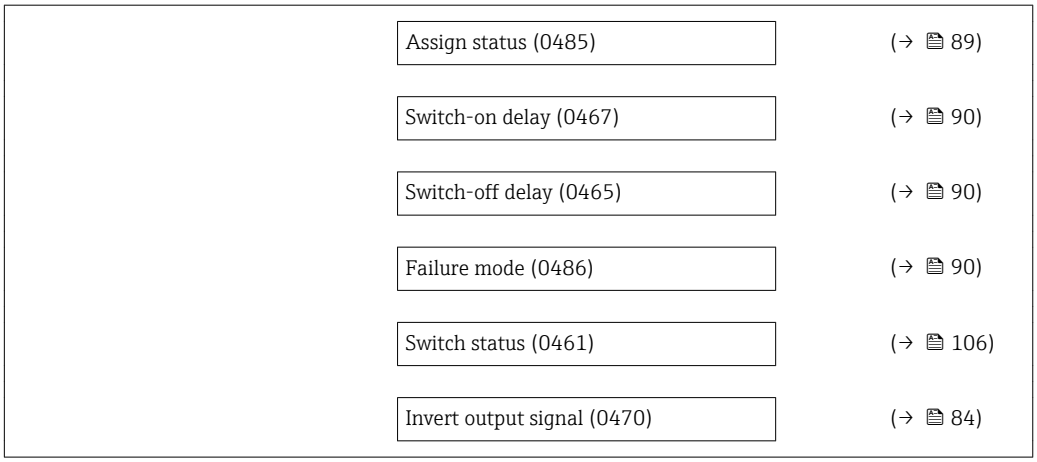
Assign status (0485)
(→ 89)
Switch-on delay (0467)
(→ 90)
Switch-off delay (0465)
(→ 90)
Failure mode (0486)
(→ 90)
Switch status (0461)
(→ 106)
Invert output signal (0470)
(→ 84)

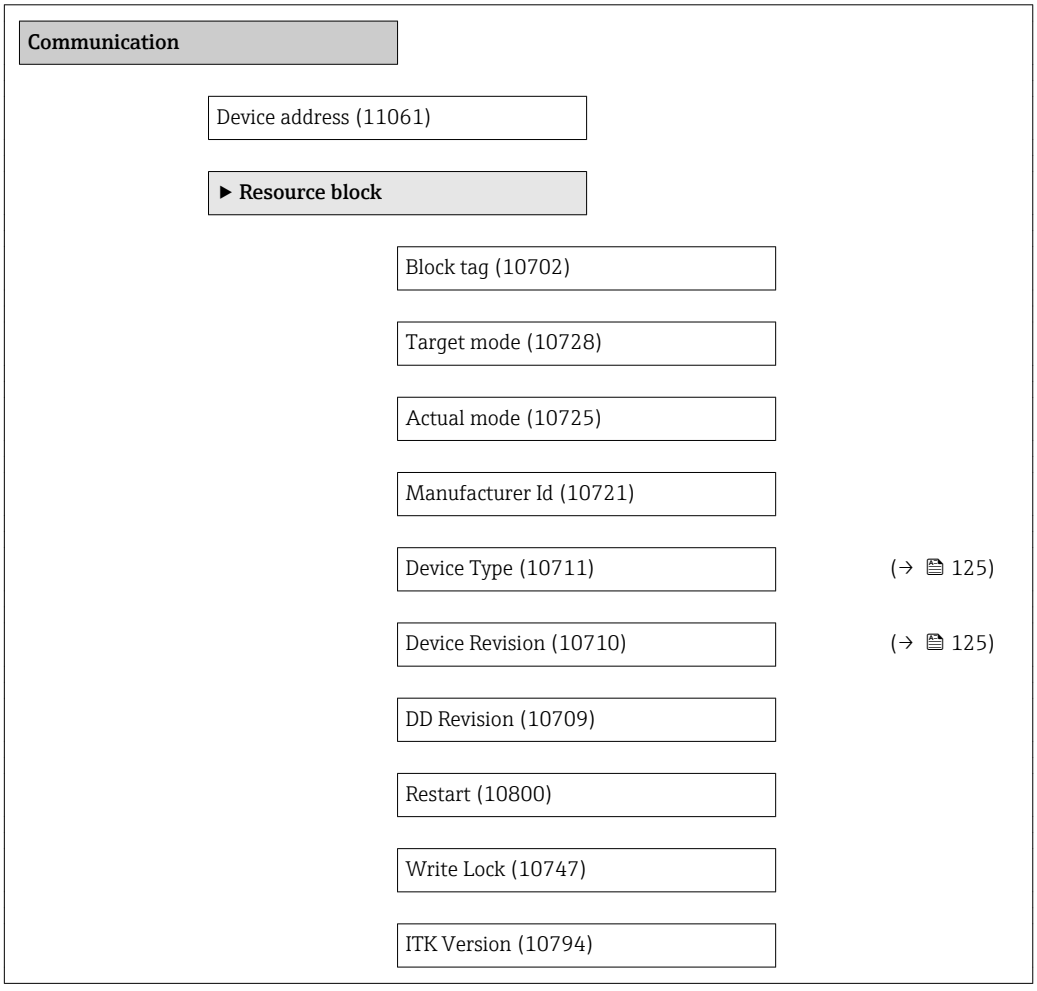
Communication
Device address (11061)
► Resource block
Block tag (10702)
Target mode (10728)
Actual mode (10725)
Manufacturer Id (10721)
Device Type (10711)
(→ 125)
Device Revision (10710)
(→ 125)
DD Revision (10709)
Restart (10800)
Write Lock (10747)
ITK Version (10794)

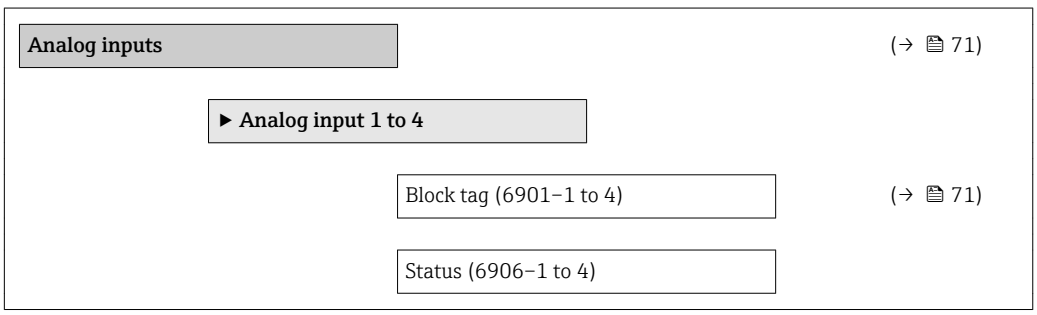
Analog inputs
(→ 71)
► Analog input 1 to 4
Block tag (6901–1 to 4)
(→ 71)
Status (6906–1 to 4)

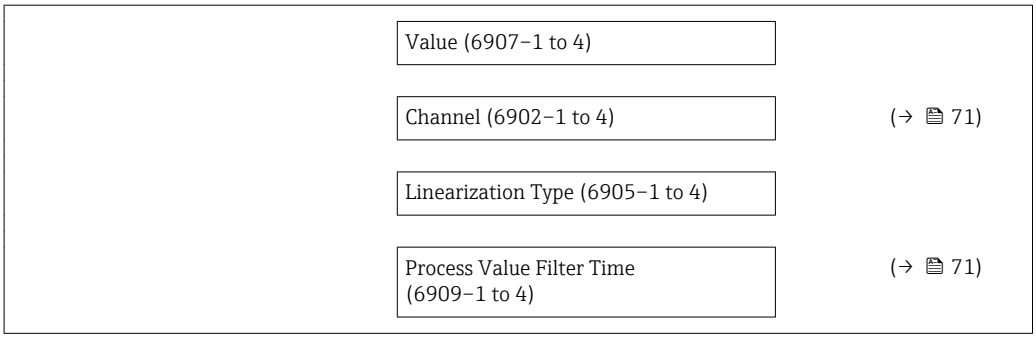
Value (6907–1 to 4)
Channel (6902–1 to 4)
(→ 71)
Linearization Type (6905–1 to 4)
Process Value Filter Time (6909–1 to 4)
(→ 71)

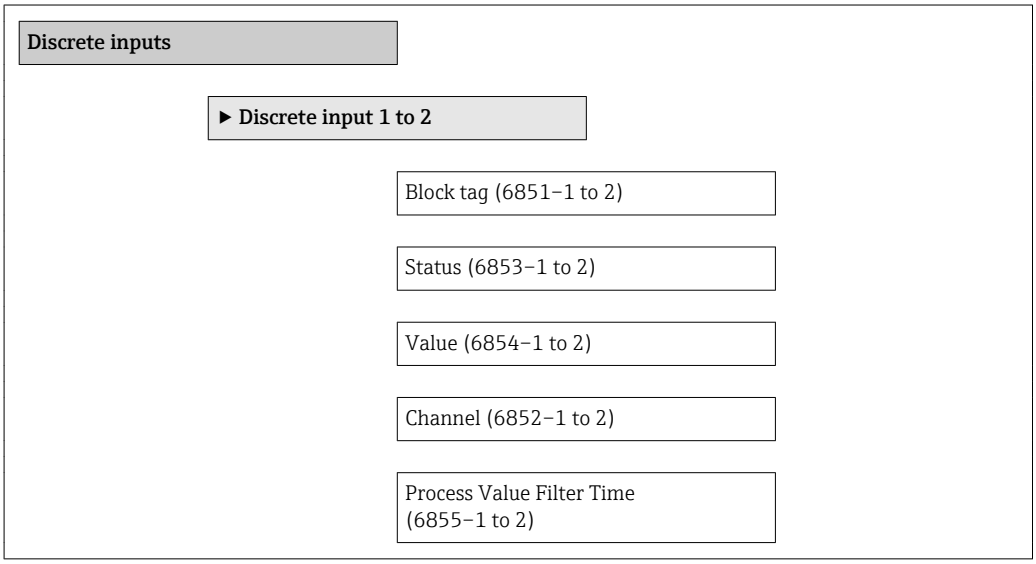
Discrete inputs
▶ Discrete input 1 to 2
Block tag (6851–1 to 2)
Status (6853–1 to 2)
Value (6854–1 to 2)
Channel (6852–1 to 2)
Process Value Filter Time (6855–1 to 2)

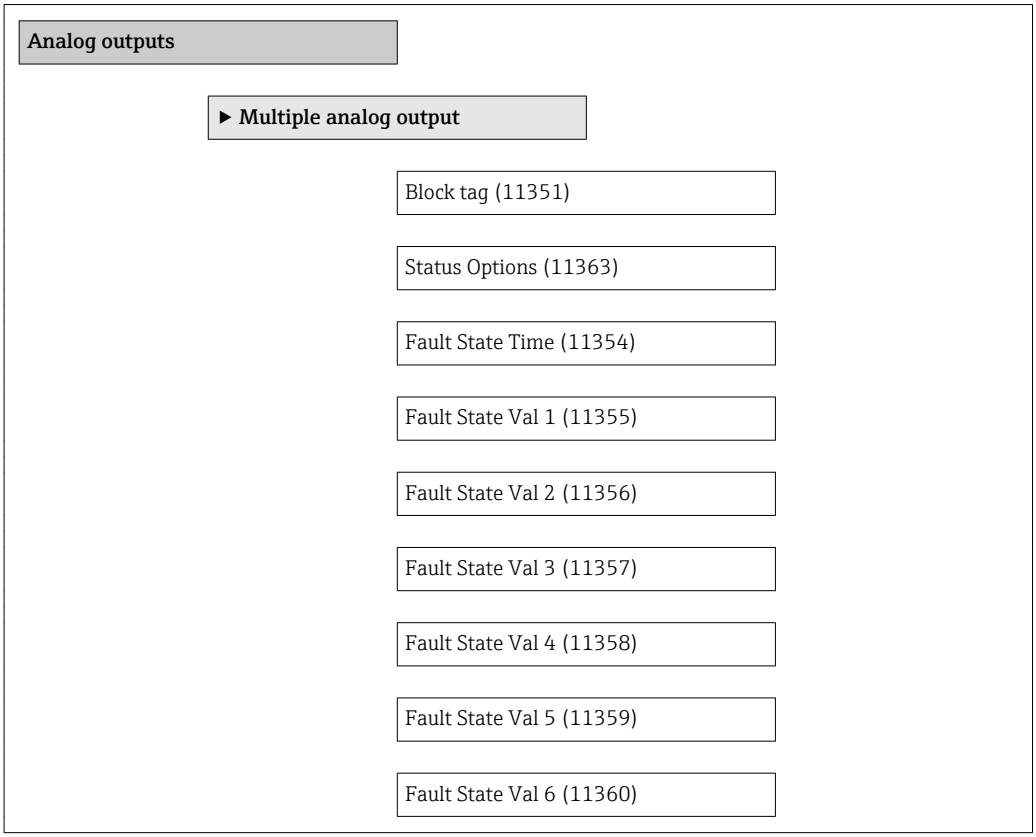
Analog outputs
▶ Multiple analog output
Block tag (11351)
Status Options (11363)
Fault State Time (11354)
Fault State Val 1 (11355)
Fault State Val 2 (11356)
Fault State Val 3 (11357)
Fault State Val 4 (11358)
Fault State Val 5 (11359)
Fault State Val 6 (11360)

Fault State Val 7 (11361)

Fault State Val 8 (11362)

Fault State Status (11353)

Discrete outputs

► Multiple discrete output

Block tag (11252)

Status Options (11268)

Fault State Time (11255)

Fault State Value Discrete 1 (11256)

Fault State Value Discrete 2 (11257)

Fault State Value Discrete 3 (11258)

Fault State Value Discrete 4 (11259)

Fault State Value Discrete 5 (11260)

Fault State Value Discrete 6 (11261)

Fault State Value Discrete 7 (11262)

Fault State Value Discrete 8 (11263)

Fault State Status (11254)

Application

Reset all totalizers (2806) (→ 107)

► Totalizer 1 to 3 (→ 90)

Assign process variable (0914–1 to 3) (→ 90)

Unit totalizer (0915–1 to 3) (→ 90)

Control Totalizer 1 to 3 (0912–1 to 3) (→ 107)

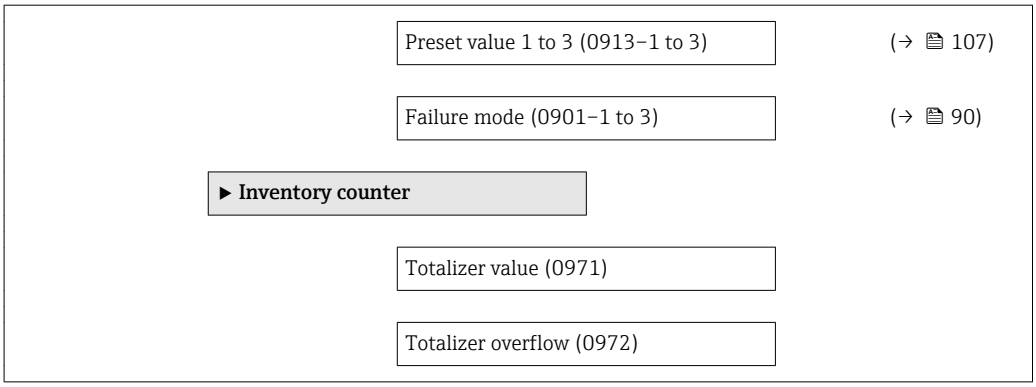
Preset value 1 to 3 (0913–1 to 3)
(→ 107)
Failure mode (0901–1 to 3)
(→ 90)
▶ Inventory counter
Totalizer value (0971)
Totalizer overflow (0972)

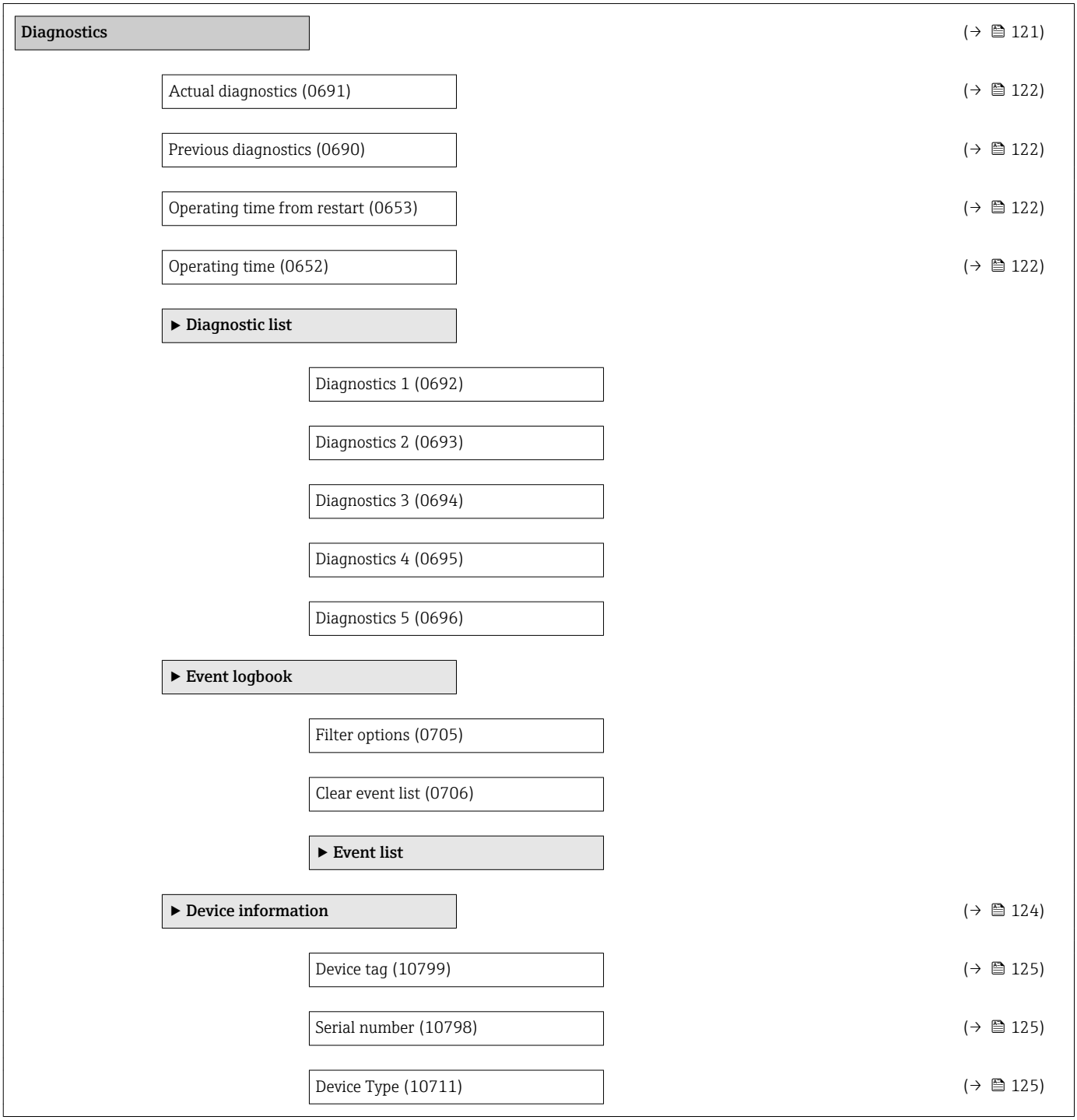
Diagnostics
(→ 121)
Actual diagnostics (0691)
(→ 122)
Previous diagnostics (0690)
(→ 122)
Operating time from restart (0653)
(→ 122)
Operating time (0652)
(→ 122)
▶ Diagnostic list
Diagnostics 1 (0692)
Diagnostics 2 (0693)
Diagnostics 3 (0694)
Diagnostics 4 (0695)
Diagnostics 5 (0696)
▶ Event logbook
Filter options (0705)
Clear event list (0706)
▶ Event list
▶ Device information
(→ 124)
Device tag (10799)
(→ 125)
Serial number (10798)
(→ 125)
Device Type (10711)
(→ 125)

Device Revision (10710) (→ 125)

DD Revision (10709)

Firmware version (10792) (→ 125)

Hardware revision (10793)

ITK Version (10794)

Order code (10795) (→ 125)

Extended order code 1 (10796) (→ 125)

Extended order code 2 (10797) (→ 125)

ENP version (10791)

▶ **Sensor information**

DSC sensor serial number (7728)

DSC ID (7735)

Meter body serial number (7657)

Meter body ID (7606)

▶ **Pre-amplifier module**

Hardware revision (0074)

Module name (0077)

Serial number (0071)

▶ **Mainboard module**

Software revision (0072)

Build no. software (0079)

Hardware revision (0074)

Module name (0077)

Serial number (0071)

Bootloader revision (0073)

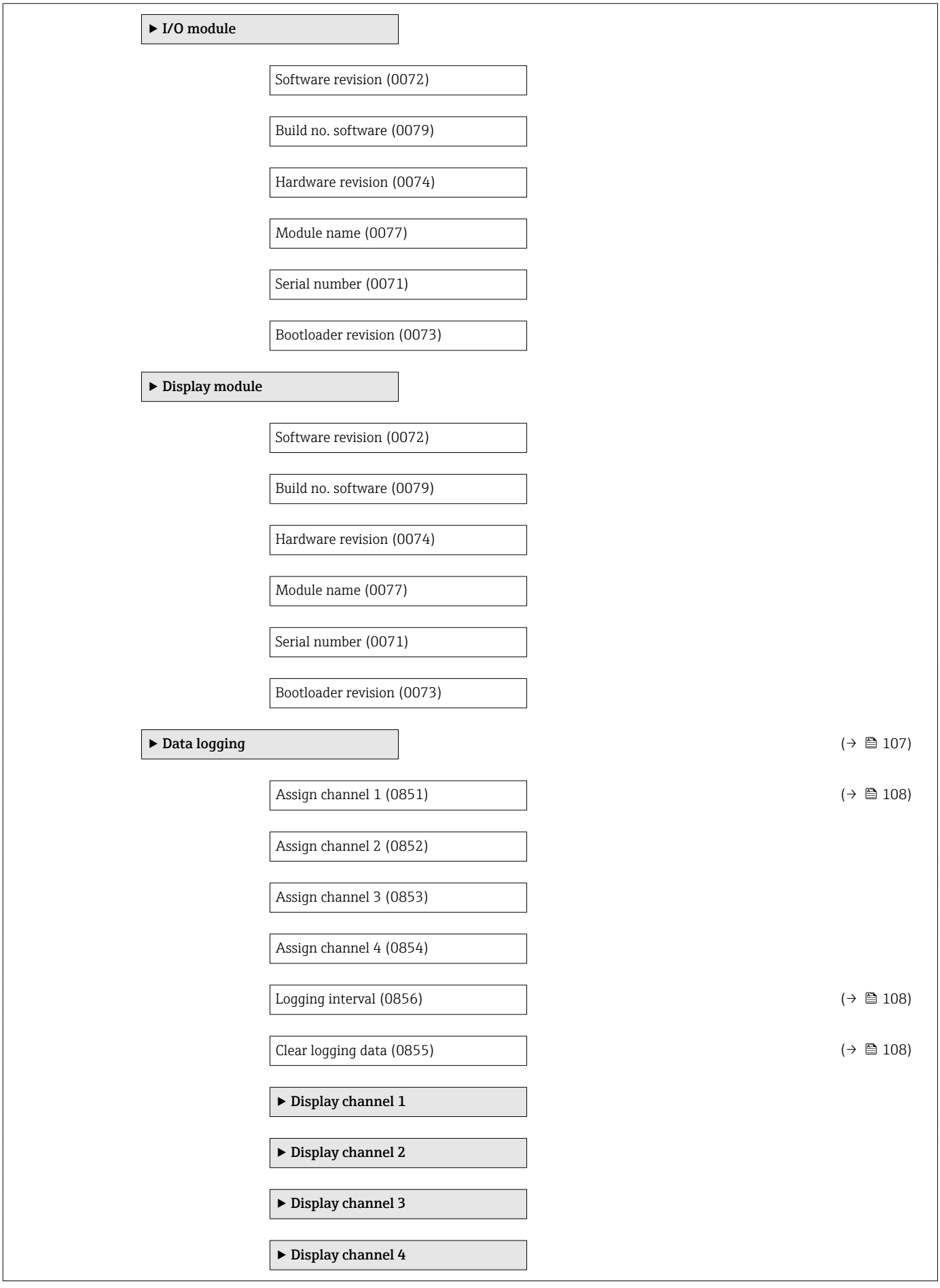
▶ I/O module
Software revision (0072)
Build no. software (0079)
Hardware revision (0074)
Module name (0077)
Serial number (0071)
Bootloader revision (0073)
▶ Display module
Software revision (0072)
Build no. software (0079)
Hardware revision (0074)
Module name (0077)
Serial number (0071)
Bootloader revision (0073)
▶ Data logging
(→ 107)
Assign channel 1 (0851)
(→ 108)
Assign channel 2 (0852)
Assign channel 3 (0853)
Assign channel 4 (0854)
Logging interval (0856)
(→ 108)
Clear logging data (0855)
(→ 108)
▶ Display channel 1
▶ Display channel 2
▶ Display channel 3
▶ Display channel 4

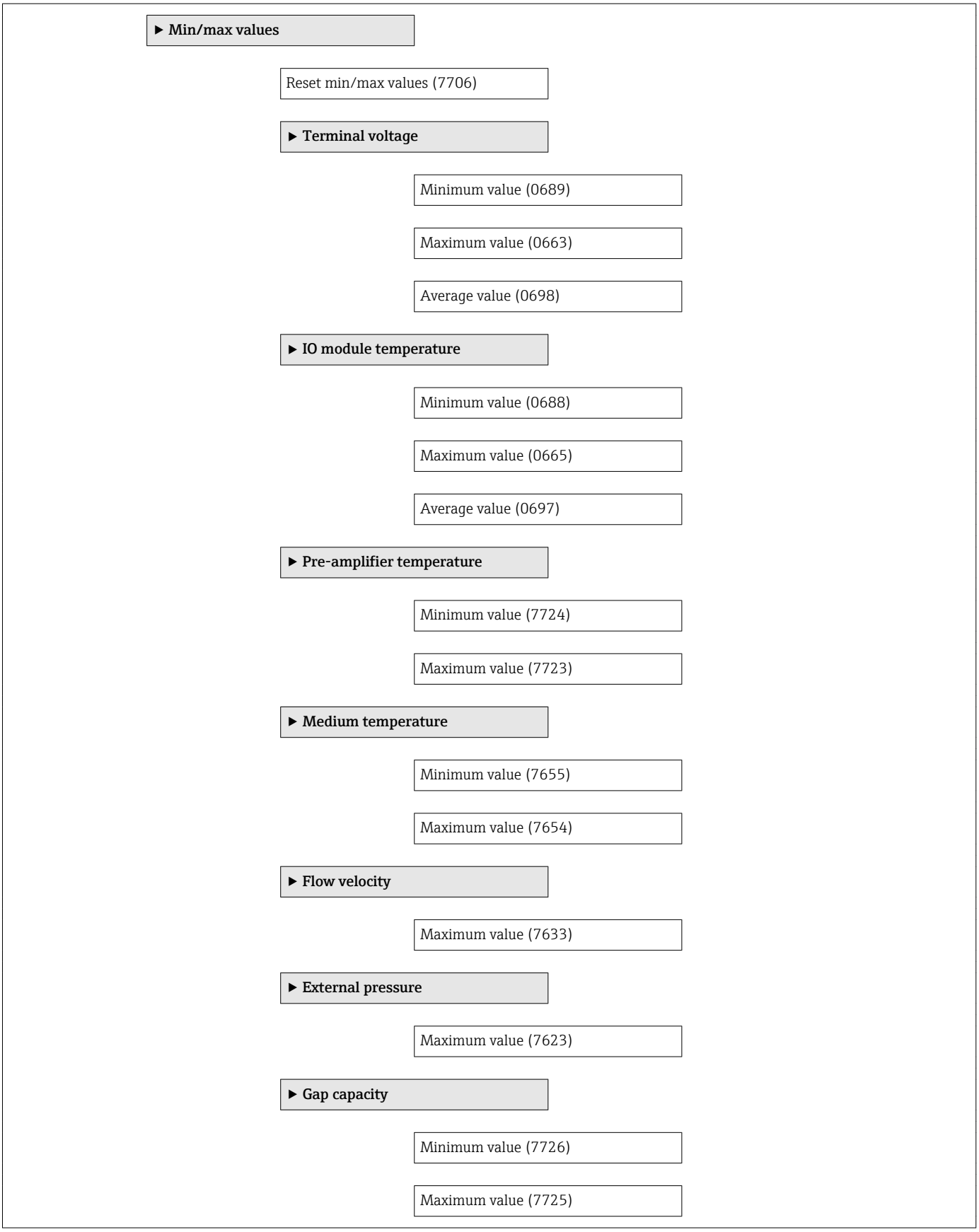
▶ Min/max values
Reset min/max values (7706)
▶ Terminal voltage
Minimum value (0689)
Maximum value (0663)
Average value (0698)
▶ IO module temperature
Minimum value (0688)
Maximum value (0665)
Average value (0697)
▶ Pre-amplifier temperature
Minimum value (7724)
Maximum value (7723)
▶ Medium temperature
Minimum value (7655)
Maximum value (7654)
▶ Flow velocity
Maximum value (7633)
▶ External pressure
Maximum value (7623)
▶ Gap capacity
Minimum value (7726)
Maximum value (7725)

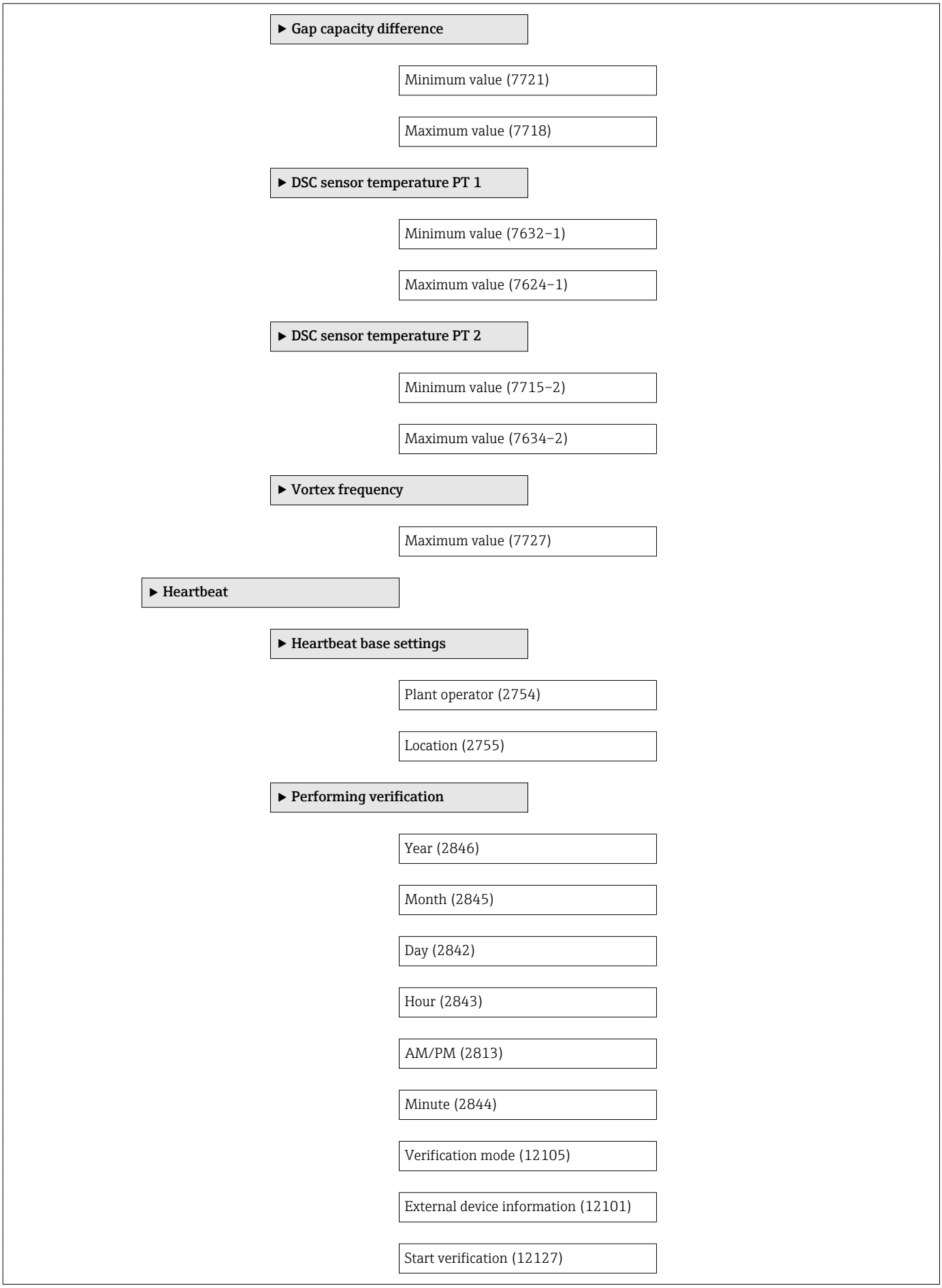
▶ Gap capacity difference
Minimum value (7721)
Maximum value (7718)
▶ DSC sensor temperature PT 1
Minimum value (7632–1)
Maximum value (7624–1)
▶ DSC sensor temperature PT 2
Minimum value (7715–2)
Maximum value (7634–2)
▶ Vortex frequency
Maximum value (7727)
▶ Heartbeat
▶ Heartbeat base settings
Plant operator (2754)
Location (2755)
▶ Performing verification
Year (2846)
Month (2845)
Day (2842)
Hour (2843)
AM/PM (2813)
Minute (2844)
Verification mode (12105)
External device information (12101)
Start verification (12127)

Status (12153)

Measured values (12102)

Output values (12103)

Overall result (12149)

▶ **Verification results**

Date/time (12142)

Verification ID (12141)

Operating time (12126)

Overall result (12149)

Sensor (12152)

Pre-amplifier module (12151)

Main electronic module (12104)

I/O module (12145)

▶ **Simulation** (→ 94)

Assign simulation process variable (1810) (→ 95)

Value process variable (1811) (→ 95)

Frequency simulation (0472) (→ 95)

Frequency value (0473) (→ 96)

Pulse simulation (0458) (→ 96)

Pulse value (0459) (→ 96)

Switch output simulation (0462) (→ 96)

Switch status (0463) (→ 96)

Simulation device alarm (0654) (→ 96)

Simulation diagnostic event (0704)

	Diagnostic event category (0738)	(→ 96)
	Simulation diagnostic event (0737)	(→ 0)

Index

A

Access authorization to parameters
- Read access . . . 54
- Write access . . . 54

Access code . . . 54
- Incorrect input . . . 54

Adapting the diagnostic behavior . . . 114
Adapting the status signal . . . 114
Ambient temperature
- Influence . . . 148

Ambient temperature range . . . 22
AMS Device Manager . . . 58
- Function . . . 58

Application . . . 9, 133
Applicator . . . 138
Approvals . . . 158

C

C-Tick symbol . . . 158
Cable entries
- Technical data . . . 145

Cable entry
- Degree of protection . . . 40

CE mark . . . 10, 158
Certificates . . . 158
Check
- Installation . . . 28

Checklist
- Post-connection check . . . 41
- Post-installation check . . . 28

Cleaning
- Exterior cleaning . . . 127
- Interior cleaning . . . 127
- Replacing housing seals . . . 127
- Replacing seals . . . 127
- Replacing sensor seals . . . 127

Climate class . . . 149
Commissioning . . . 64
- Advanced settings . . . 75
- Configuring the measuring device . . . 65

Connecting cable . . . 29
Connecting the measuring device . . . 34
Connection
- see Electrical connection

Connection preparations . . . 34
Connection tools . . . 29
Context menu
- Closing . . . 49
- Explanation . . . 49
- Opening . . . 49

Current consumption . . . 145

D

Declaration of Conformity . . . 10
Define access code . . . 97
Degree of protection . . . 40, 149
Design
- Measuring device . . . 11

Designated use . . . 9
Device components . . . 11
Device description files . . . 59
Device documentation
- Supplementary documentation . . . 8

Device locking, status . . . 103
Device name
- Sensor . . . 14
- Transmitter . . . 13

Device repair . . . 128
Device revision . . . 59
Device type ID . . . 59
Diagnostic behavior
- Explanation . . . 112
- Symbols . . . 112

Diagnostic information
- Design, description . . . 112, 114
- FieldCare . . . 113
- Local display . . . 111
- Overview . . . 118
- Remedial measures . . . 118

Diagnostic list . . . 122
Diagnostic message . . . 111
DIAGNOSTIC Transducer Block . . . 122
Diagnostics
- Symbols . . . 111

Diagnostics (Menu) . . . 242
DIP switch
- see Write protection switch

Direct access . . . 51
Direct access code . . . 46
Disabling write protection . . . 96
Display
- Current diagnostic event . . . 121
- Previous diagnostic event . . . 121
- see Local display

Display area
- For operational display . . . 45
- In the navigation view . . . 46

Display values
- For locking status . . . 103

Disposal . . . 129
Document
- Function . . . 6
- Symbols used . . . 6

Document function . . . 6

E

Electrical connection
- Commubox FXA291 . . . 56
- Degree of protection . . . 40
- Measuring device . . . 29
- Operating tools
  - Via FOUNDATION Fieldbus network . . . 56, 157

Via service interface (CDI) 56
Electromagnetic compatibility 149
Enabling write protection 96
Endress+Hauser services
Maintenance 127
Repair 129
Environment
Ambient temperature range 22
Storage temperature 149
Vibration resistance 149
Error messages
see Diagnostic messages
Event history 123
Events list 123
Ex approval 158
Expert (Menu) 247
Extended order code
Sensor 14
Transmitter 13
Exterior cleaning 127

F
Field Communicator
Function 58
Field Communicator 475 58
Field of application
Residual risks 10
Field Xpert
Function 57
Field Xpert SFX350 57
FieldCare 57
Device description file 59
Function 57
User interface 58
Filtering the event logbook 123
Firmware
Release date 59
Version 59
Firmware history 125
Flow direction 19
FOUNDATION Fieldbus block structure 60, 100
FOUNDATION Fieldbus certification 159
FOUNDATION Fieldbus Indextabellen 162
Function check 64
Function scope
AMS Device Manager 58
Field Communicator 58
Field Communicator 475 58
Field Xpert 57
Functions
see Parameter

G
Galvanic isolation 141

H
Hardware write protection 97
Help text
Calling up 52
Close 52
Explanation 52
HistoROM 93

I
I/O electronics module 11, 34
Identifying the measuring device 12
Incoming acceptance 12
Influence
Ambient temperature 148
Information on the document 6
Inlet runs 20
Input 133
Input mask 47
Inspection
Received goods 12
Inspection check
Connection 41
Installation 19
Installation conditions
Inlet and outlet runs 20
Mounting kit 25
Mounting location 19
Orientation 19
Thermal insulation 23
Vibrations 23
Installation dimensions 22
Interior cleaning 127

K
Keypad lock
Disabling 54
Enabling 54

L
Languages, operation options 158
Line recorder 107
Local display 156
Editing view 47
Navigation view 45
see Diagnostic message
see In alarm condition
see Operational display
Low flow cut off 141

M
Main electronics module 11
Maintenance tasks 127
Managing the device configuration 93
Manufacturer ID 59
Manufacturing date 13, 14
Materials 154
Maximum measured error 146
Measured variables
Calculated 133
Measured 133
see Process variables
Measuring and test equipment 127
Measuring device
Configuration 65

Conversion 128
Design 11
Disposal 129
Mounting the sensor 25
Preparing for electrical connection 34
Preparing for mounting 25
Removing 129
Repair 128
Switch-on 64
Measuring principle 133
Measuring range 138
Measuring system 133
Media 9
Medium temperature range 150
Menu
Diagnostics 121, 242
Expert 247
Operation 103, 233
Setup 65, 234
Menus
For measuring device configuration 65
For specific settings 75
Mounting dimensions
see Installation dimensions
Mounting kit 25
Mounting location 19
Mounting preparations 25
Mounting requirements
Installation dimensions 22
Mounting tools 24

N

Nameplate
Sensor 14
Transmitter 13
Navigation path (navigation view) 45
Navigation view
In the submenu 45
In the wizard 45
Numeric editor 47

O

Operable flow range 138
Operating elements 49, 112
Operating keys
see Operating elements
Operating menu
Menus, submenus 43
Overview of menus with parameters 233
Structure 43
Submenus and user roles 44
Operating philosophy 44
Operation 103
Operation (Menu) 233
Operation options 42
Operational display 44
Operational safety 10
Order code 12, 13, 14
Orientation (vertical, horizontal) 19
Outlet runs 20
Output 139
Output signal 139
Overview
Operating menu 233

P

Packaging disposal 18
Parameter
Changing 53
Enter a value 53
Parameter settings
Analog inputs (Submenu) 71
Configuration backup display (Submenu) 93
Data logging (Submenu) 107
Device information (Submenu) 124
Diagnostics (Menu) 121
Display (Submenu) 91
Display (Wizard) 71
External compensation (Submenu) 81
Gas composition (Submenu) 77
Low flow cut off (Wizard) 73
Medium properties (Submenu) 76
Medium selection (Wizard) 69
Operation (Submenu) 106
Output values (Submenu) 105
Process variables (Submenu) 103
Pulse/frequency/switch output (Wizard) . . 83, 84, 87
Sensor adjustment (Submenu) 82
Setup (Menu) 65
Simulation (Submenu) 94
System units (Submenu) 66
Totalizer (Submenu) 105
Totalizer 1 to 3 (Submenu) 90
Performance characteristics 146
Post-connection check (checklist) 41
Post-installation check 64
Post-installation check (checklist) 28
Potential equalization 145
Power consumption 145
Power supply failure 145
Pressure Equipment Directive 159
Pressure loss 150
Pressure-temperature ratings 150
Process
Pressure loss 150
Process conditions
Medium temperature 150
Product safety 10
Protecting parameter settings 96

R

Read access 54
Reading measured values 103
Recalibration 127
Reference operating conditions 146
Registered trademarks 8
Remedial measures
Calling up 112

Closing 112
Remote operation 157
Remote version
Connecting the connecting cable 36
Repair 128
Notes 128
Repair of a device 128
Repeatability 148
Replacement
Device components 128
Replacing seals 127
Requirements for personnel 9
Response time 148
Returning devices 129

S

Safety 9
Sensor
Mounting 25
Sensor (Submenu) 251
Serial number 13, 14
Service interface (CDI) 158
Setting the operating language 64
Settings
Adapting the measuring device to the process conditions 106
Advanced display configurations 91
Analog input 71
Device reset 124
Device tag 65
External compensation 81
Gas composition 77
Local display 71
Low flow cut off 73
Managing the device configuration 93
Medium 69
Medium properties 76
Operating language 64
Pulse output 83
Pulse/frequency/switch output 82, 84
Resetting the totalizer 106
Sensor adjustment 82
Simulation 94
Switch output 87
System units 66
Totalizer 90
Totalizer reset 106
Setup (Menu) 234
Showing data logging 107
Signal on alarm 140
Software release 59
Spare part 128
Spare parts 128
Special connection instructions 40
Standards and guidelines 159
Status area
For operational display 44
In the navigation view 46
Status signals 111
Storage conditions 17
Storage temperature 17
Storage temperature range 149
Structure
Operating menu 43
Submenu
Advanced setup 75
Analog inputs 71
Configuration backup display 93
Data logging 107
Define access code 97
Device information 124
Display 91
Events list 123
External compensation 81
Gas composition 77
Medium properties 76
Operation 106
Output values 105
Overview 44
Process variables 103
Sensor 251
Sensor adjustment 82
Simulation 94
System 247
System units 66
Totalizer 105
Totalizer 1 to 3 90
Supplementary documentation 160
Supply unit
Requirements 33
Supply voltage 33, 144
Symbols
For communication 44
For correction 47
For diagnostic behavior 44
For locking 44
For measured variable 45
For measurement channel number 45
For menus 46
For parameters 46
For status signal 44
For submenu 46
For wizard 46
In the status area of the local display 44
In the text and numeric editor 47
System (Submenu) 247
System design
Measuring system 133
see Measuring device design
System integration 59

T

Technical data, overview 133
Temperature range
Ambient temperature range for display 156
Storage temperature 17
Terminal assignment 31, 34
Terminals 145

Text editor 47
Thermal insulation 23
Tool tip
see Help text
Tools
Electrical connection 29
Installation 24
Transport 17
Transmitter
Connecting the signal cables 34
Turning the display module 28
Turning the housing 27
Transporting the measuring device 17
Troubleshooting
General 109
Turning the display module 28
Turning the electronics housing
see Turning the transmitter housing
Turning the transmitter housing 27

U

Use of the measuring device
Borderline cases 9
Incorrect use 9
see Designated use
User roles 44

V

Version data for the device 59
Vibration resistance 149
Vibrations 23

W

W@M 127, 128
W@M Device Viewer 12, 128
Weight
Compact version
SI units 151
US units 151
Flow conditioner 152
Sensor remote version
SI units 152
US units 152
Transport (notes) 17
Wizard
Define access code 96
Display 71
Low flow cut off 73
Medium selection 69
Pulse/frequency/switch output 83, 84, 87
Workplace safety 10
Write access 54
Write protection
Via access code 96
Via block operation 99
Via write protection switch 97
Write protection switch 97

www.addresses.endress.com

Endress+Hauser

People for Process Automation