BA01234D/06/EN/02.14
71258941

Valid as of version
01.00.zz (Device firmware)

Operating Instructions
Proline Promag W 400 PROFIBUS DP

Electromagnetic flowmeter

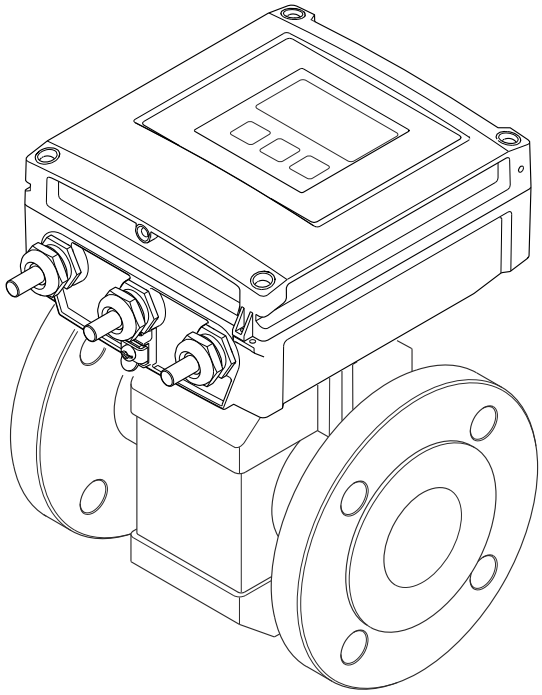

Endress+Hauser
People for Process Automation

- Make sure the document is stored in a safe place such that it is always available when working on or with the device.
- To avoid danger to individuals or the facility, read the "Basic safety instructions" section carefully, as well as all other safety instructions in the document that are specific to working procedures.
- The manufacturer reserves the right to modify technical data without prior notice. Your Endress+Hauser Sales Center will supply you with current information and updates to these Instructions.

Table of contents

1 Document information 6
1.1 Document function 6
1.2 Symbols used 6
1.2.1 Safety symbols 6
1.2.2 Electrical symbols 6
1.2.3 Tool symbols 6
1.2.4 Symbols for certain types of information 7
1.2.5 Symbols in graphics 7
1.3 Documentation 7
1.3.1 Standard documentation 8
1.3.2 Supplementary device-dependent documentation 8
1.4 Registered trademarks 8

2 Basic safety instructions 9
2.1 Requirements for the personnel 9
2.2 Designated use 9
2.3 Workplace safety 10
2.4 Operational safety 10
2.5 Product safety 10
2.6 IT security 11

3 Product description 12
3.1 Product design 12

4 Incoming acceptance and product identification 13
4.1 Incoming acceptance 13
4.2 Product identification 13
4.2.1 Transmitter nameplate 14
4.2.2 Sensor nameplate 15
4.2.3 Symbols on measuring device 16

5 Storage and transport 17
5.1 Storage conditions 17
5.2 Transporting the product 17
5.2.1 Measuring devices without lifting lugs 17
5.2.2 Measuring devices with lifting lugs . . 18
5.2.3 Transporting with a fork lift 18
5.3 Packaging disposal 18

6 Installation 19
6.1 Installation conditions 19
6.1.1 Mounting position 19
6.1.2 Requirements from environment and process 21
6.1.3 Special mounting instructions 23
6.2 Mounting the measuring device 24
6.2.1 Required tools 24
6.2.2 Preparing the measuring device 24
6.2.3 Mounting the sensor 24
6.2.4 Mounting the transmitter of the remote version 30
6.2.5 Turning the transmitter housing 31
6.2.6 Turning the display module 33
6.3 Post-installation check 34

7 Electrical connection 35
7.1 Connection conditions 35
7.1.1 Required tools 35
7.1.2 Requirements for connecting cable . . . 35
7.1.3 Terminal assignment 37
7.1.4 Preparing the measuring device 38
7.1.5 Preparing the connecting cable for the remote version 38
7.2 Connecting the measuring device 40
7.2.1 Connecting the remote version 40
7.2.2 Connecting the transmitter 42
7.2.3 Ensuring potential equalization 43
7.3 Special connection instructions 45
7.3.1 Connection examples 45
7.4 Hardware settings 45
7.4.1 Setting the device address 45
7.4.2 Enabling the terminating resistor 46
7.5 Ensuring the degree of protection 46
7.5.1 Degree of protection IP66/67, Type 4X enclosure 46
7.5.2 Degree of protection IP68, Type 6P enclosure, with "Cust-potted" option . . 47
7.6 Post-connection check 47

8 Operation options 48
8.1 Overview of operation options 48
8.2 Structure and function of the operating menu 49
8.2.1 Structure of the operating menu 49
8.2.2 Operating philosophy 50
8.3 Access to the operating menu via the local display 51
8.3.1 Operational display 51
8.3.2 Navigation view 52
8.3.3 Editing view 54
8.3.4 Operating elements 55
8.3.5 Opening the context menu 56
8.3.6 Navigating and selecting from list . . . 58
8.3.7 Calling the parameter directly 58
8.3.8 Calling up help text 59
8.3.9 Changing the parameters 60
8.3.10 User roles and related access authorization 61
8.3.11 Disabling write protection via access code 61

8.3.12 Enabling and disabling the keypad lock 61
8.4 Access to the operating menu via the Web browser 62
8.4.1 Function range 62
8.4.2 Prerequisites 62
8.4.3 Establishing a connection 63
8.4.4 Logging on 64
8.4.5 User interface 64
8.4.6 Disabling the Web server 65
8.4.7 Logging out 65
8.5 Access to the operating menu via the operating tool 66
8.5.1 Connecting the operating tool 66
8.5.2 FieldCare 67

9 System integration 69
9.1 Overview of device description files 69
9.1.1 Current version data for the device . . . 69
9.1.2 Operating tools 69
9.2 Device master file (GSD) 69
9.2.1 Manufacturer-specific GSD 69
9.2.2 Profile GSD 70
9.2.3 Compatibility with other Endress +Hauser measuring devices 70
9.3 Cyclic data transmission 71
9.3.1 Block model 71
9.3.2 Description of the modules 72

10 Commissioning 77
10.1 Function check 77
10.2 Switching on the measuring device 77
10.3 Establishing a connection via FieldCare 77
10.4 Configuring the device address via software . . 77
10.4.1 PROFIBUS network 77
10.5 Setting the operating language 77
10.6 Configuring the measuring device 78
10.6.1 Defining the tag name 79
10.6.2 Setting the system units 79
10.6.3 Configuring the local display 80
10.6.4 Configuring the communication interface 82
10.6.5 Configuring the analog inputs 83
10.6.6 Configuring the low flow cut off 83
10.6.7 Configuring empty pipe detection . . . 85
10.7 Advanced settings 86
10.7.1 Carrying out a sensor adjustment 87
10.7.2 Configuring the totalizer 87
10.7.3 Carrying out additional display configurations 89
10.7.4 Performing electrode cleaning 91
10.8 Simulation 92
10.9 Protecting settings from unauthorized access 93
10.9.1 Write protection via access code 93
10.9.2 Write protection via write protection switch 94

11 Operation 96
11.1 Reading device locking status 96
11.2 Adjusting the operating language 96
11.3 Configuring the display 96
11.4 Reading measured values 96
11.4.1 Process variables 96
11.4.2 Totalizer 97
11.5 Adapting the measuring device to the process conditions 97
11.6 Performing a totalizer reset 98
11.7 Showing data logging 98

12 Diagnostics and troubleshooting . . 101
12.1 General troubleshooting 101
12.2 Diagnostic information via light emitting diodes 102
12.2.1 Transmitter 102
12.3 Diagnostic information on local display 104
12.3.1 Diagnostic message 104
12.3.2 Calling up remedial measures 105
12.4 Diagnostic information in the Web browser . 106
12.4.1 Diagnostic options 106
12.4.2 Calling up remedy information 107
12.5 Diagnostic information in FieldCare 107
12.5.1 Diagnostic options 107
12.5.2 Calling up remedy information 108
12.6 Adapting the diagnostic information 108
12.6.1 Adapting the diagnostic behavior . . . 108
12.7 Overview of diagnostic information 110
12.8 Pending diagnostic events 113
12.9 Diagnostic list 113
12.10 Event logbook 114
12.10.1 Event history 114
12.10.2 Filtering the event logbook 114
12.10.3 Overview of information events 114
12.11 Resetting the measuring device 115
12.11.1 Function scope of "Device reset" parameter 116
12.12 Device information 116
12.13 Firmware history 118

13 Maintenance 119
13.1 Maintenance tasks 119
13.1.1 Exterior cleaning 119
13.1.2 Interior cleaning 119
13.1.3 Replacing seals 119
13.2 Measuring and test equipment 119
13.3 Endress+Hauser services 119

14 Repair 120
14.1 General notes 120
14.2 Spare parts 120
14.3 Endress+Hauser services 120
14.4 Return 120
14.5 Disposal 120
14.5.1 Removing the measuring device 120

14.5.2 Disposing of the measuring device . . 121

15 Accessories 122

15.1 Device-specific accessories 122
15.1.1 For the transmitter 122
15.1.2 For the sensor 122
15.2 Service-specific accessories 122
15.3 System components 123

16 Technical data 124

16.1 Application 124
16.2 Function and system design 124
16.3 Input 124
16.4 Output 127
16.5 Power supply 128
16.6 Performance characteristics 130
16.7 Installation 131
16.8 Environment 131
16.9 Process 133
16.10 Mechanical construction 134
16.11 Operability 150
16.12 Certificates and approvals 152
16.13 Application packages 153
16.14 Accessories 154
16.15 Supplementary documentation 154

17 Appendix 156

17.1 Overview of the operating menu 156
17.1.1 "Operation" menu 156
17.1.2 "Setup" menu 157
17.1.3 "Diagnostics" menu 160
17.1.4 "Expert" menu 164

Index 183

1 Document information

1.1 Document function

These Operating Instructions contain all the information that is required in various phases of the life cycle of the device: from product identification, incoming acceptance and storage, to mounting, connection, operation and commissioning through to troubleshooting, maintenance and disposal.

1.2 Symbols used

1.2.1 Safety symbols

Symbol	Meaning
DANGER	**DANGER!** This symbol alerts you to a dangerous situation. Failure to avoid this situation will result in serious or fatal injury.
WARNING	**WARNING!** This symbol alerts you to a dangerous situation. Failure to avoid this situation can result in serious or fatal injury.
CAUTION	**CAUTION!** This symbol alerts you to a dangerous situation. Failure to avoid this situation can result in minor or medium injury.
NOTICE	**NOTE!** This symbol contains information on procedures and other facts which do not result in personal injury.

1.2.2 Electrical symbols

Symbol	Meaning	Symbol	Meaning
⎓	Direct current	~	Alternating current
⎓ ~	Direct current and alternating current	⏚	**Ground connection** A grounded terminal which, as far as the operator is concerned, is grounded via a grounding system.
⊜	**Protective ground connection** A terminal which must be connected to ground prior to establishing any other connections.	⏚	**Equipotential connection** A connection that has to be connected to the plant grounding system: This may be a potential equalization line or a star grounding system depending on national or company codes of practice.

1.2.3 Tool symbols

Symbol	Meaning
	Torx screwdriver
	Phillips head screwdriver
	Open-ended wrench

1.2.4 Symbols for certain types of information

Symbol	Meaning
	Permitted Procedures, processes or actions that are permitted.
	Preferred Procedures, processes or actions that are preferred.
	Forbidden Procedures, processes or actions that are forbidden.
	Tip Indicates additional information.
	Reference to documentation
	Reference to page
	Reference to graphic
1. , 2. , 3. …	Series of steps
	Result of a sequence of actions
	Help in the event of a problem
	Visual inspection

1.2.5 Symbols in graphics

Symbol	Meaning	Symbol	Meaning
1, 2, 3,...	Item numbers	1. , 2. , 3. …	Series of steps
A, B, C, ...	Views	A-A, B-B, C-C, ...	Sections
	Hazardous area		Safe area (non-hazardous area)
	Flow direction		

1.3 Documentation

For an overview of the scope of the associated Technical Documentation, refer to the following:

- The CD-ROM provided for the device (depending on the device version, the CD-ROM might not be part of the delivery!)
- The *W@M Device Viewer* : Enter the serial number from the nameplate (www.endress.com/deviceviewer)
- The *Endress+Hauser Operations App*: Enter the serial number from the nameplate or scan the 2-D matrix code (QR code) on the nameplate.

For a detailed list of the individual documents along with the documentation code

1.3.1 Standard documentation

Document type	Purpose and content of the document
Technical Information	**Planning aid for your device** The document contains all the technical data on the device and provides an overview of the accessories and other products that can be ordered for the device.
Brief Operating Instructions	**Guide that takes you quickly to the 1st measured value** The Brief Operating Instructions contain all the essential information from incoming acceptance to initial commissioning.

1.3.2 Supplementary device-dependent documentation

Additional documents are supplied depending on the device version ordered: Always comply strictly with the instructions in the supplementary documentation. The supplementary documentation is an integral part of the device documentation.

1.4 Registered trademarks

PROFIBUS®
Registered trademark of the PROFIBUS User Organization, Karlsruhe, Germany

Microsoft®
Registered trademark of the Microsoft Corporation, Redmond, Washington, USA

Applicator®, FieldCare®, Field Xpert™, HistoROM®, Heartbeat Technology™
Registered or registration-pending trademarks of the Endress+Hauser Group

2 Basic safety instructions

2.1 Requirements for the personnel

The personnel for installation, commissioning, diagnostics and maintenance must fulfill the following requirements:
- Trained, qualified specialists must have a relevant qualification for this specific function and task
- Are authorized by the plant owner/operator
- Are familiar with federal/national regulations
- Before beginning work, the specialist staff must have read and understood the instructions in the Operating Instructions and supplementary documentation as well as in the certificates (depending on the application)
- Following instructions and basic conditions

The operating personnel must fulfill the following requirements:
- Being instructed and authorized according to the requirements of the task by the facility's owner-operator
- Following the instructions in these Operating Instructions

2.2 Designated use

Application and media
The measuring device described in these Instructions is intended only for flow measurement of liquids with a minimum conductivity of 5 µS/cm.

Depending on the version ordered, the measuring device can also measure potentially explosive, flammable, poisonous and oxidizing media.

Measuring devices for use in hazardous areas, in hygienic applications or in applications where there is an increased risk due to process pressure, are labeled accordingly on the nameplate.

To ensure that the measuring device remains in proper condition for the operation time:
- Only use the measuring device in full compliance with the data on the nameplate and the general conditions listed in the Operating Instructions and supplementary documentation.
- Based on the nameplate, check whether the ordered device is permitted for the intended use in the hazardous area (e.g. explosion protection, pressure vessel safety).
- Use the measuring device only for media against which the process-wetted materials are adequately resistant.
- If the measuring device is not operated at atmospheric temperature, compliance with the relevant basic conditions specified in the associated device documentation is absolutely essential: "Documentation" section (→ 🖹 7).

Incorrect use
Non-designated use can compromise safety. The manufacturer is not liable for damage caused by improper or non-designated use.

⚠ WARNING

Danger of breakage of the sensor due to corrosive or abrasive fluids!
- Verify the compatibility of the process fluid with the sensor material.
- Ensure the resistance of all fluid-wetted materials in the process.
- Observe the specified pressure and temperature range.

Verification for borderline cases:
- For special fluids and fluids for cleaning, Endress+Hauser is glad to provide assistance in verifying the corrosion resistance of fluid-wetted materials, but does not accept any

warranty or liability as minute changes in the temperature, concentration or level of contamination in the process can alter the corrosion resistance properties.

Residual risks
The external surface temperature of the housing can increase by max. 10 K due to the power consumption of the electronic components. Hot process fluids passing through the measuring device will further increase the surface temperature of the housing. The surface of the sensor, in particular, can reach temperatures which are close to the fluid temperature.

Possible burn hazard due to fluid temperatures!
- ▶ For elevated fluid temperature, ensure protection against contact to prevent burns.

2.3 Workplace safety

For work on and with the device:
- ▶ Wear the required personal protective equipment according to federal/national regulations.

For welding work on the piping:
- ▶ Do not ground the welding unit via the measuring device.

If working on and with the device with wet hands:
- ▶ It is recommended to wear gloves on account of the higher risk of electric shock.

2.4 Operational safety

Risk of injury.
- ▶ Operate the device in proper technical condition and fail-safe condition only.
- ▶ The operator is responsible for interference-free operation of the device.

Conversions to the device

Unauthorized modifications to the device are not permitted and can lead to unforeseeable dangers.
- ▶ If, despite this, modifications are required, consult with Endress+Hauser.

Repair

To ensure continued operational safety and reliability,
- ▶ Carry out repairs on the device only if they are expressly permitted.
- ▶ Observe federal/national regulations pertaining to repair of an electrical device.
- ▶ Use original spare parts and accessories from Endress+Hauser only.

Environmental requirements

If a plastic transmitter housing is permanently exposed to certain steam and air mixtures, this can damage the housing.
- ▶ If you are unsure, please contact your Endress+Hauser Sales Center for clarification.
- ▶ If used in an approval-related area, observe the information on the nameplate.

2.5 Product safety

This measuring device is designed in accordance with good engineering practice to meet state-of-the-art safety requirements, has been tested, and left the factory in a condition in which it is safe to operate.

It meets general safety standards and legal requirements. It also complies with the EC directives listed in the device-specific EC Declaration of Conformity. Endress+Hauser confirms this by affixing the CE mark to the device.

2.6 IT security

We only provide a warranty if the device is installed and used as described in the Operating Instructions. The device is equipped with security mechanisms to protect it against any inadvertent changes to the device settings.

IT security measures in line with operators' security standards and designed to provide additional protection for the device and device data transfer must be implemented by the operators themselves.

3 Product description

The device consists of a transmitter and a sensor.

Two device versions are available:
- Compact version - the transmitter and sensor form a mechanical unit.
- Remote version – the transmitter and sensor are mounted separately from one another.

3.1 Product design

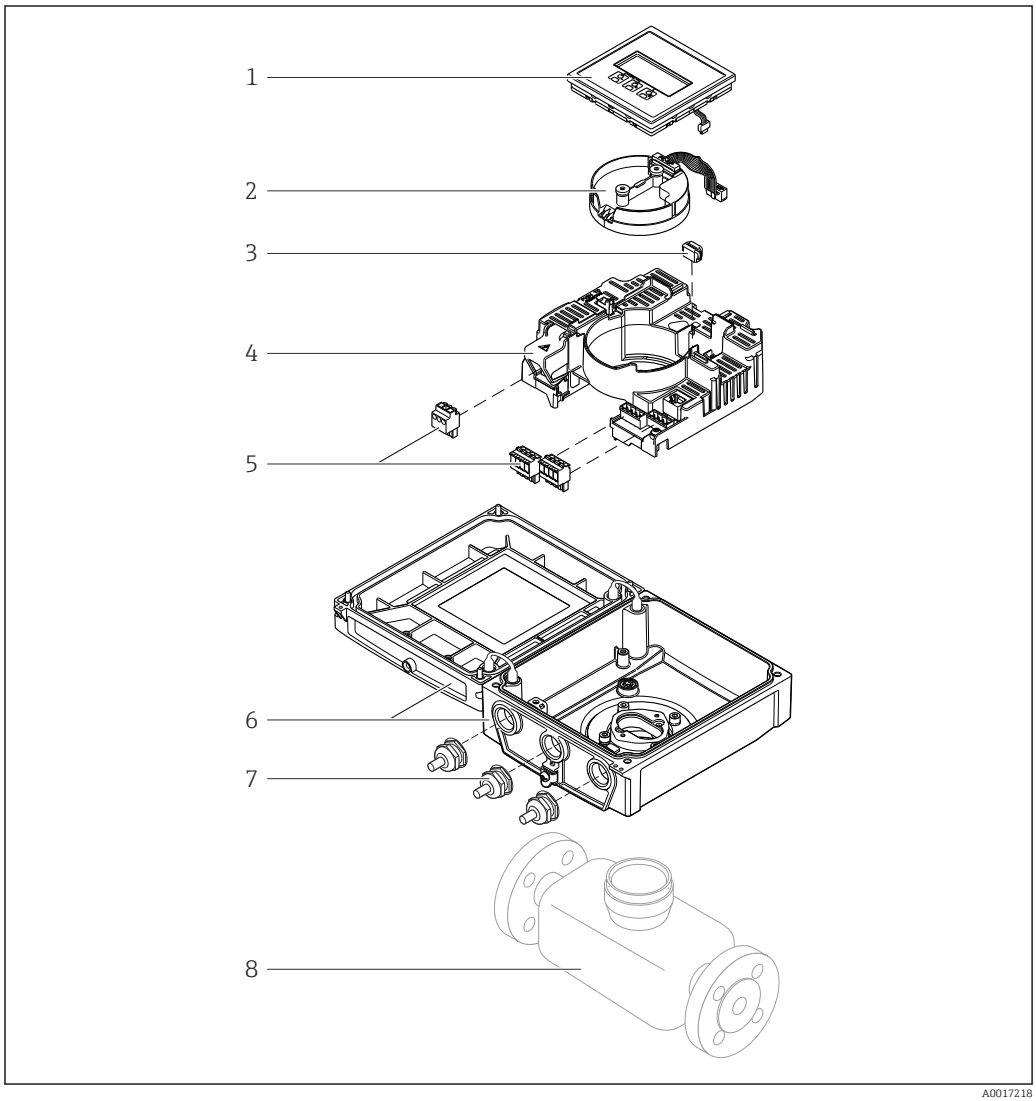

1 Important components of the compact version

1 *Display module*
2 *Smart sensor electronics module*
3 *HistoROM DAT (plug-in memory)*
4 *Main electronics module*
5 *Terminals (screw terminals, some available as plug-in terminals)*
6 *Transmitter housing, compact version*
7 *Cable glands*
8 *Sensor, compact version*

4 Incoming acceptance and product identification

4.1 Incoming acceptance

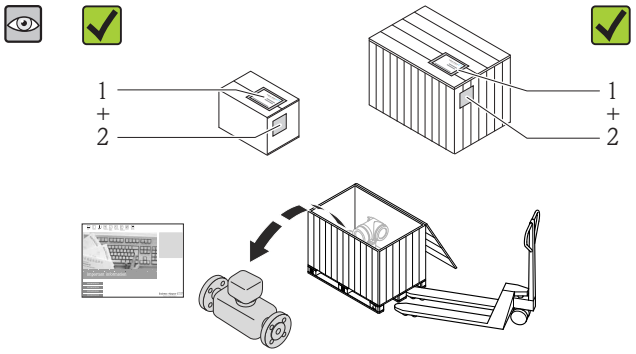

Are the order codes on the delivery note (1) and the product sticker (2) identical?

Are the goods undamaged?

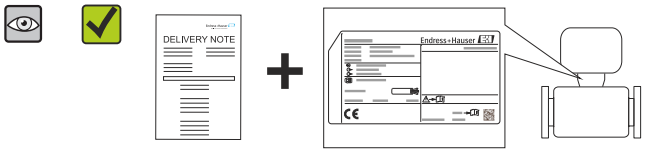

Do the nameplate data match the ordering information on the delivery note?

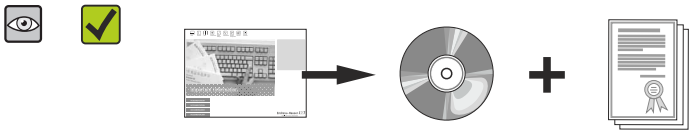

Is the CD-ROM with the Technical Documentation (depends on device version) and documents present?

- If one of the conditions is not satisfied, contact your Endress+Hauser Sales Center.
- Depending on the device version, the CD-ROM might not be part of the delivery! The Technical Documentation is available via the Internet or via the *Endress+Hauser Operations App*, see the "Product identification" section (→ 14).

4.2 Product identification

The following options are available for identification of the measuring device:
- Nameplate specifications
- Order code with breakdown of the device features on the delivery note
- Enter serial numbers from nameplates in *W@M Device Viewer* (www.endress.com/deviceviewer): All information about the measuring device is displayed.
- Enter the serial number from the nameplates into the *Endress+Hauser Operations App* or scan the 2-D matrix code (QR code) on the nameplate with the *Endress+Hauser Operations App*: all the information for the measuring device is displayed.

For an overview of the scope of the associated Technical Documentation, refer to the following:

- The chapters "Additional standard documentation on the device" (→ 8) and "Supplementary device-dependent documentation" (→ 8)
- The *W@M Device Viewer*: Enter the serial number from the nameplate (www.endress.com/deviceviewer)
- The *Endress+Hauser Operations App*: Enter the serial number from the nameplate or scan the 2-D matrix code (QR code) on the nameplate.

4.2.1 Transmitter nameplate

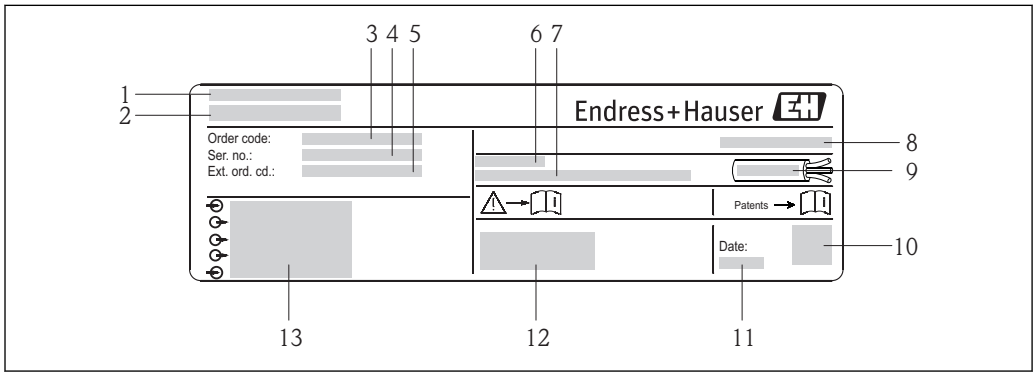

2 *Example of a transmitter nameplate*

1 *Manufacturing location*
2 *Name of the transmitter*
3 *Order code*
4 *Serial number (Ser. no.)*
5 *Extended order code (Ext. ord. cd.)*
6 *Permitted ambient temperature (T_a)*
7 *Firmware version (FW) and device revision (Dev.Rev.) from the factory*
8 *Degree of protection*
9 *Permitted temperature range for cable*
10 *2-D matrix code*
11 *Manufacturing date: year-month*
12 *CE mark, C-Tick*
13 *Electrical connection data, e.g. available inputs and outputs, supply voltage*

4.2.2 Sensor nameplate

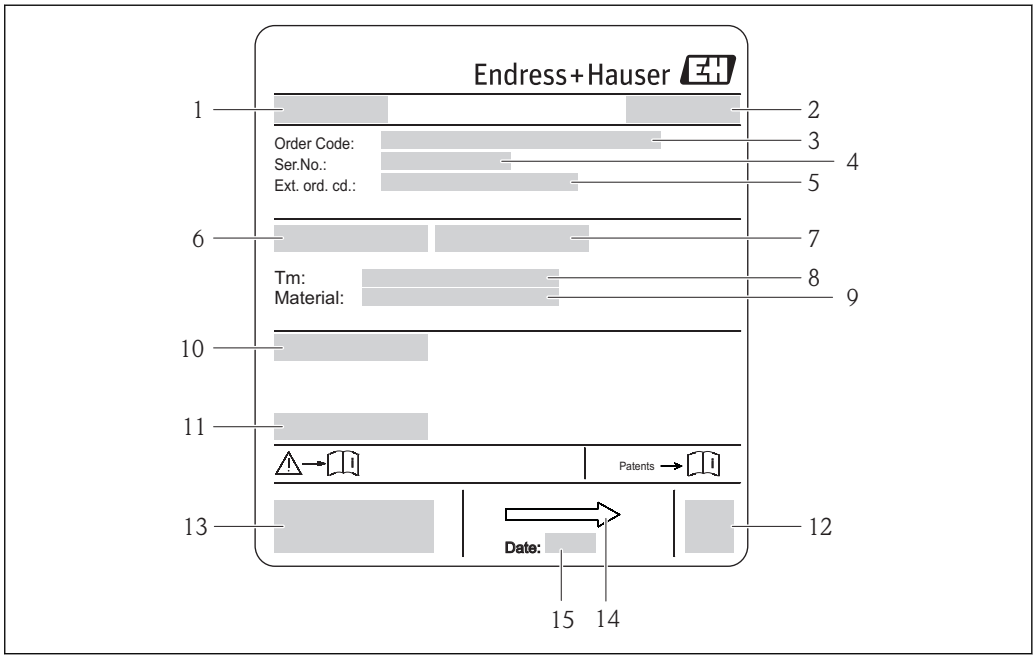

3 *Example of sensor nameplate*

1 *Name of the sensor*
2 *Manufacturing location*
3 *Order code*
4 *Serial number (ser. no.)*
5 *Extended order code (ext. ord. cd.)*
6 *Nominal diameter of sensor*
7 *Test pressure of the sensor*
8 *Fluid temperature range*
9 *Material of lining and electrodes*
10 *Degree of protection: e.g. IP, NEMA*
11 *Permitted ambient temperature (T_a)*
12 *2-D matrix code*
13 *CE mark, C-Tick*
14 *Flow direction*
15 *Manufacturing date: year-month*

Order code

The measuring device is reordered using the order code.

Extended order code

- The device type (product root) and basic specifications (mandatory features) are always listed.
- Of the optional specifications (optional features), only the safety and approval-related specifications are listed (e.g. LA). If other optional specifications are also ordered, these are indicated collectively using the # placeholder symbol (e.g. #LA#).
- If the ordered optional specifications do not include any safety and approval-related specifications, they are indicated by the + placeholder symbol (e.g. XXXXXX-ABCDE +).

4.2.3 Symbols on measuring device

Symbol	Meaning
	WARNING! This symbol alerts you to a dangerous situation. Failure to avoid this situation can result in serious or fatal injury.
	Reference to documentation Refers to the corresponding device documentation.
	Protective ground connection A terminal which must be connected to ground prior to establishing any other connections.

5 Storage and transport

5.1 Storage conditions

Observe the following notes for storage:
- Store in the original packaging to ensure protection from shock.
- Do not remove protective covers or protective caps installed on process connections. They prevent mechanical damage to the sealing surfaces and contamination in the measuring tube.
- Protect from direct sunlight to avoid unacceptably high surface temperatures.
- Select a storage location where moisture cannot collect in the measuring device as fungus and bacteria infestation can damage the lining.
- Store in a dry and dust-free place.
- Do not store outdoors.
- Storage temperature(→ 132)

5.2 Transporting the product

Transport the measuring device to the measuring point in the original packaging.

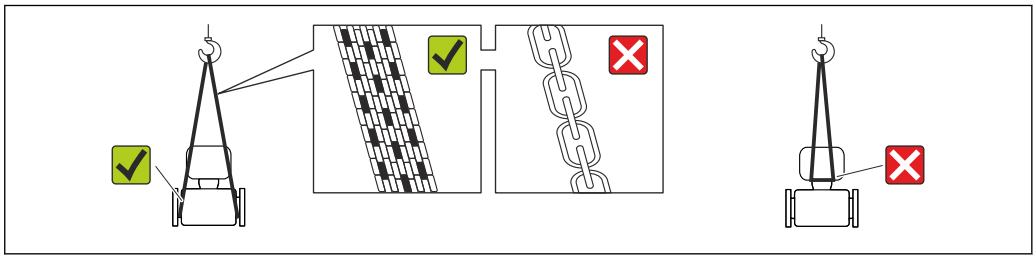

A0015604

Do not remove protective covers or caps installed on process connections. They prevent mechanical damage to the sealing surfaces and contamination in the measuring tube.

5.2.1 Measuring devices without lifting lugs

WARNING

Center of gravity of the measuring device is higher than the suspension points of the webbing slings.

Risk of injury if the measuring device slips.

- ▶ Secure the measuring device against slipping or turning.
- ▶ Observe the weight specified on the packaging (stick-on label).

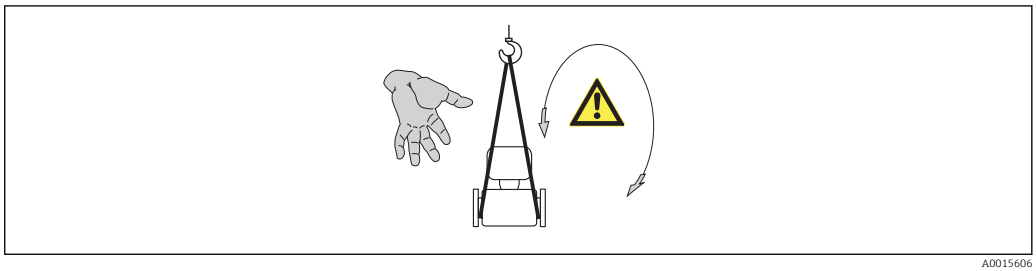

A0015606

5.2.2 Measuring devices with lifting lugs

⚠ CAUTION

Special transportation instructions for devices with lifting lugs

- ▶ Only use the lifting lugs fitted on the device or flanges to transport the device.
- ▶ The device must always be secured at two lifting lugs at least.

5.2.3 Transporting with a fork lift

If transporting in wood crates, the floor structure enables the crates to be lifted lengthwise or at both sides using a forklift.

⚠ CAUTION

Risk of damaging the magnetic coil

- ▶ If transporting by forklift, do not lift the sensor by the metal casing.
- ▶ This would buckle the casing and damage the internal magnetic coils.

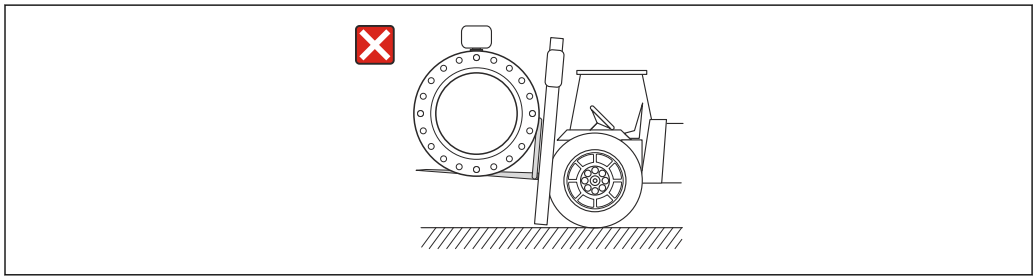

A0023726

5.3 Packaging disposal

All packaging materials are environmentally friendly and 100% recyclable:

- Measuring device secondary packaging: polymer stretch film that conforms to EC Directive 2002/95/EC (RoHS).
- Packaging:
  - Wood crate, treated in accordance with ISPM 15 standard, which is confirmed by the affixed IPPC logo.
    or
  - Carton in accordance with European Packaging Directive 94/62EC; recyclability is confirmed by the affixed RESY symbol.
- Seaworthy packaging (optional): Wood crate, treated in accordance with ISPM 15 standard, which is confirmed by the affixed IPPC logo.
- Carrying and mounting hardware:
  - Disposable plastic pallet
  - Plastic straps
  - Plastic adhesive strips
- Dunnage: Paper cushion

6 Installation

6.1 Installation conditions

6.1.1 Mounting position

Mounting location

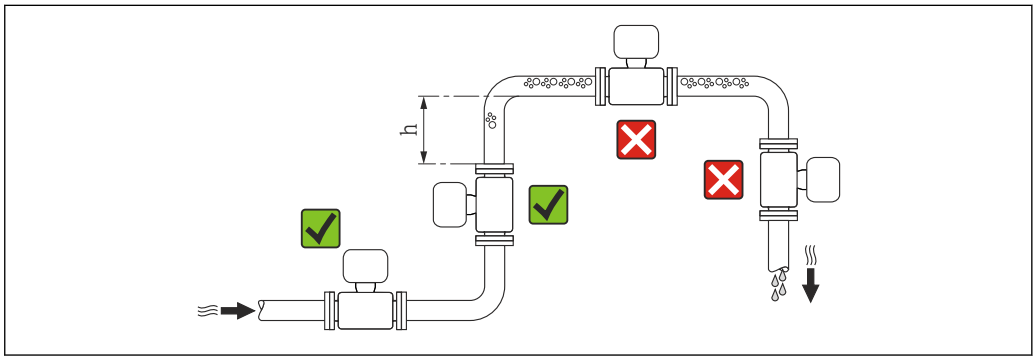

Preferably install the sensor in an ascending pipe, and ensure a sufficient distance to the next pipe elbow: h ≥ 2 × DN

To prevent measuring errors arising from accumulation of gas bubbles in the measuring tube, avoid the following mounting locations in the pipe:
- Highest point of a pipeline.
- Directly upstream of a free pipe outlet in a down pipe.

Installation in down pipes

Install a siphon with a vent valve downstream of the sensor in down pipes whose length h ≥ 5 m (16.4 ft). This precaution is to avoid low pressure and the consequent risk of damage to the measuring tube. This measure also prevents the system losing prime.

For information on the liner's resistance to partial vacuum (→ 133)

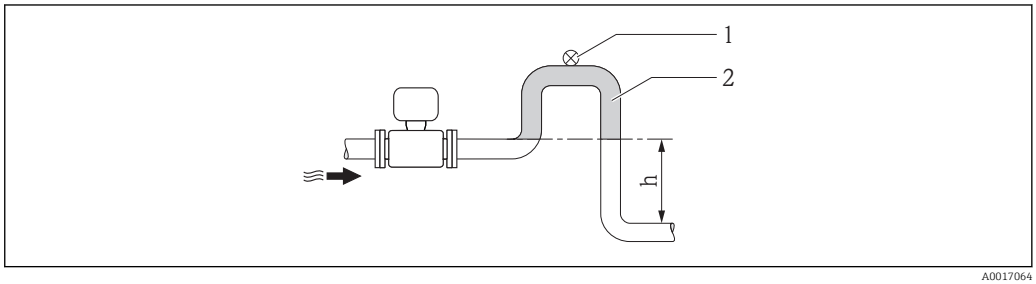

4 *Installation in a down pipe*

1 Vent valve
2 Pipe siphon
h Length of down pipe

Installation in partially filled pipes

A partially filled pipe with a gradient necessitates a drain-type configuration.

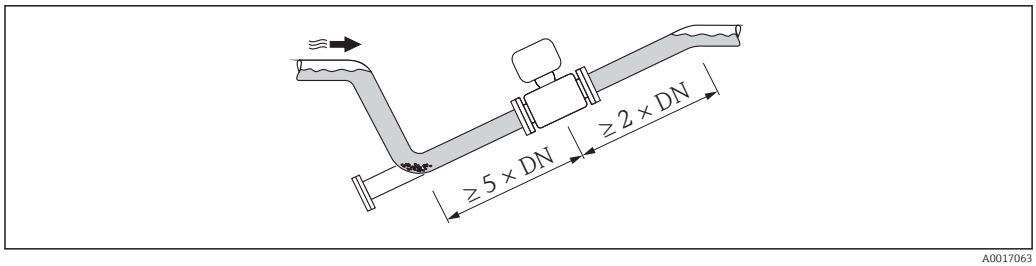

A0017063

Orientation

The direction of the arrow on the sensor nameplate helps you to install the sensor according to the flow direction (direction of medium flow through the piping).

An optimum orientation position helps avoid gas and air accumulations and deposits in the measuring tube.

The measuring device also offers the empty pipe detection function to detect partially filled measuring pipes in the event of outgassing fluids or variable process pressures.

Vertical

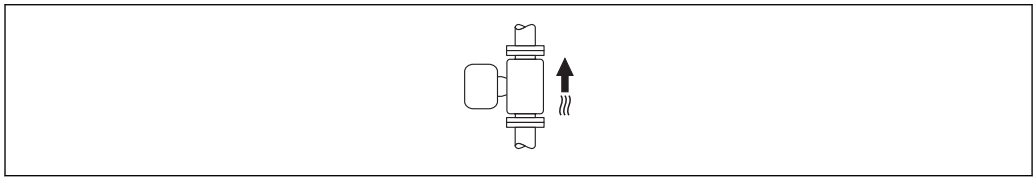

A0015591

Optimum for self-emptying pipe systems and for use in conjunction with empty pipe detection.

Horizontal

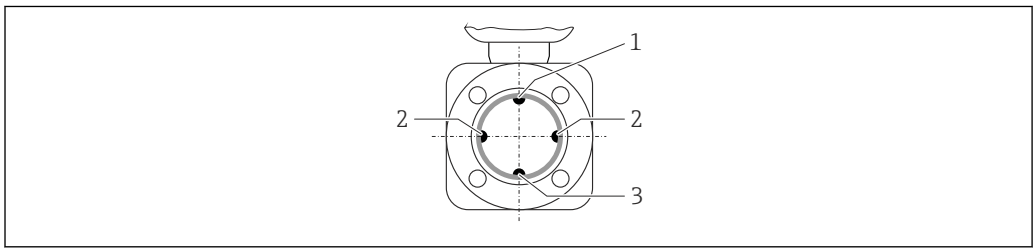

A0016260

1 EPD electrode for empty pipe detection
2 Measuring electrodes for signal detection
3 Reference electrode for potential equalization

- The measuring electrode plane must be horizontal. This prevents brief insulation of the two measuring electrodes by entrained air bubbles.
- Empty pipe detection only works if the transmitter housing is pointing upwards as otherwise there is no guarantee that the empty pipe detection function will actually respond to a partially filled or empty measuring tube.

Inlet and outlet runs

If possible, install the sensor upstream from fittings such as valves, T-pieces or elbows.

Observe the following inlet and outlet runs to comply with accuracy specifications:

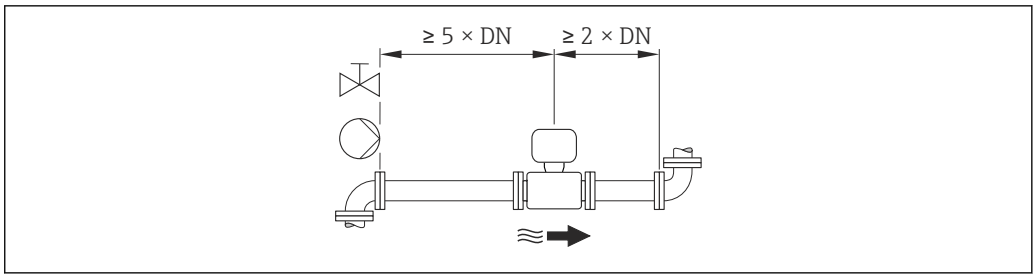

A0016275

To keep within the in-service maximum permissible errors for custody transfer no additional requirements apply with regard to the graphic illustrated above.

Installation dimensions

For the dimensions and installation lengths of the device, see the "Technical Information" document, "Mechanical construction" section

6.1.2 Requirements from environment and process

Ambient temperature range

Transmitter	−40 to +60 °C (−40 to +140 °F)
Local display	−20 to +60 °C (−4 to +140 °F), the readability of the display may be impaired at temperatures outside the temperature range.
Sensor	▪ Process connection material, carbon steel: −10 to +60 °C (+14 to +140 °F) ▪ Process connection material, stainless steel: −40 to +60 °C (−40 to +140 °F)
Liner	Do not exceed or fall below the permitted temperature range of the liner (→ 133).

If operating outdoors:
- Install the measuring device in a shady location.
- Avoid direct sunlight, particularly in warm climatic regions.
- Avoid direct exposure to weather conditions.
- Protect the display against impact.
- Protect the display from abrasion by sand in desert areas.

A display protector can be ordered from Endress+Hauser: "Accessories" section (→ 122)

System pressure

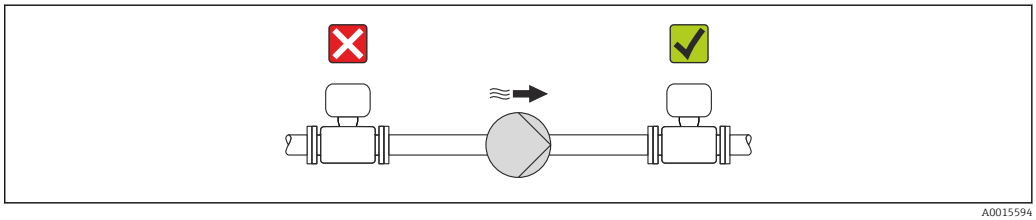
A0015594

Never install the sensor on the pump suction side in order to avoid the risk of low pressure, and thus damage to the liner.

Furthermore, install pulse dampers if reciprocating, diaphragm or peristaltic pumps are used.

- For information on the liner's resistance to partial vacuum (→ 133)
- Information on the shock resistance of the measuring system (→ 132)
- Information on the vibration resistance of the measuring system (→ 132)

Vibrations

In the event of very strong vibrations, the pipe and sensor must be supported and fixed.

It is also advisable to mount the sensor and transmitter separately.

Information on the shock resistance of the measuring system (→ 132)

Information on the vibration resistance of the measuring system (→ 132)

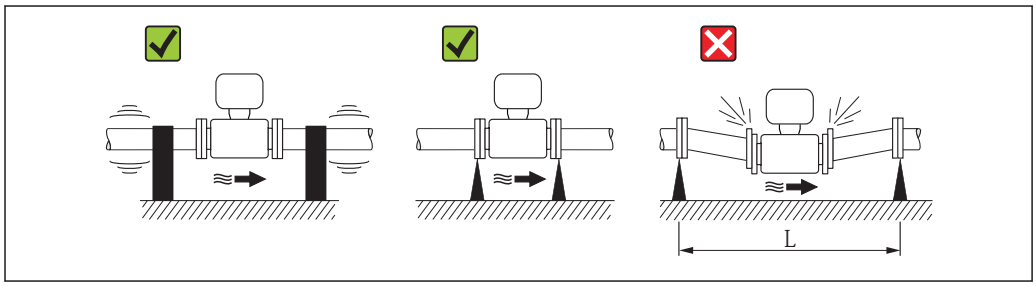

5 *Measures to avoid device vibrations (L > 10 m (33 ft))*

Adapters

Suitable adapters to DIN EN 545 (double-flange reducers) can be used to install the sensor in larger-diameter pipes. The resultant increase in the rate of flow improves measuring accuracy with very slow-moving fluids. The nomogram shown here can be used to calculate the pressure loss caused by reducers and expanders.

The nomogram only applies to liquids with a viscosity similar to that of water.

1. Calculate the ratio of the diameters d/D.
2. From the nomogram read off the pressure loss as a function of flow velocity (downstream from the reduction) and the d/D ratio.

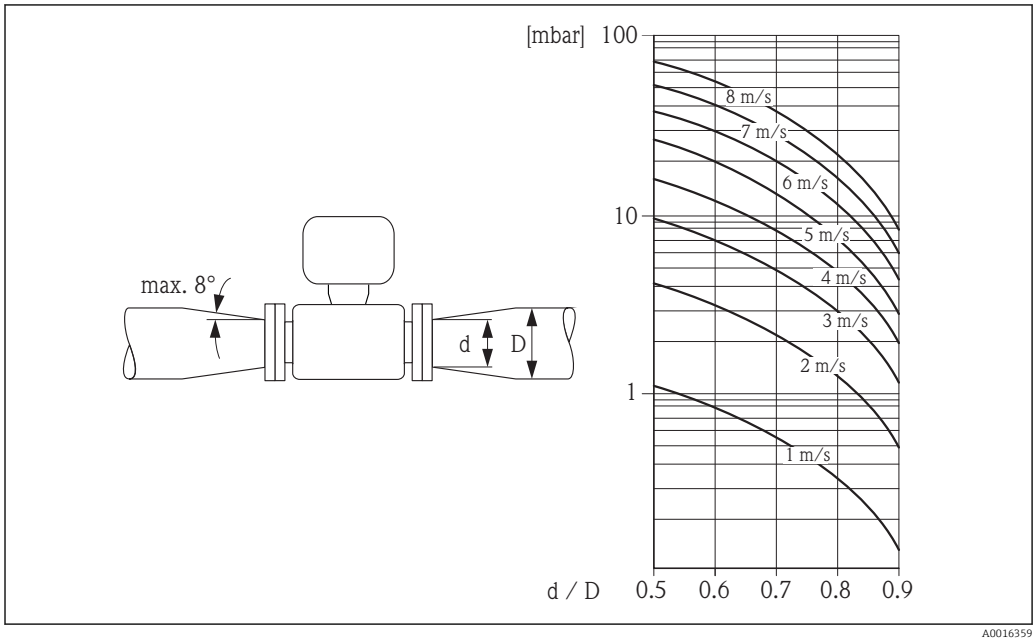

6.1.3 Special mounting instructions

Display protection

▶ To ensure that the optional display protection can be easily opened, maintain the following minimum head clearance: 350 mm (13.8 in)

Permanent immersion in water

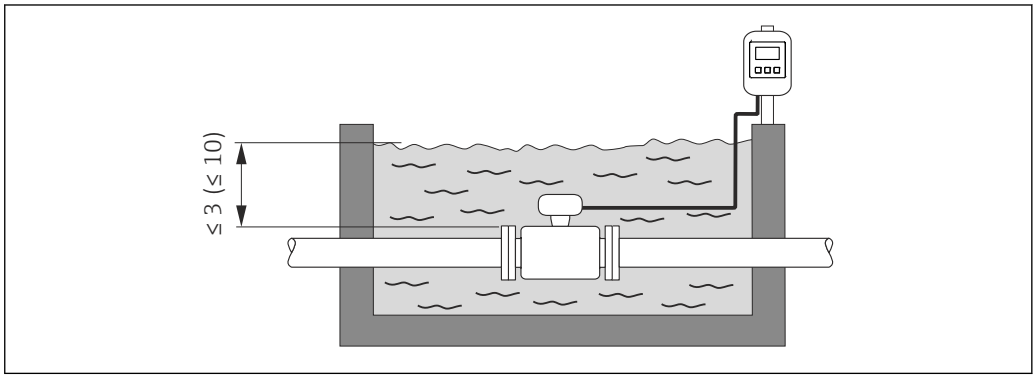

6 *Engineering unit in m(ft)*

Replacement of cable gland on connection housing (→ 129)

Buried applications

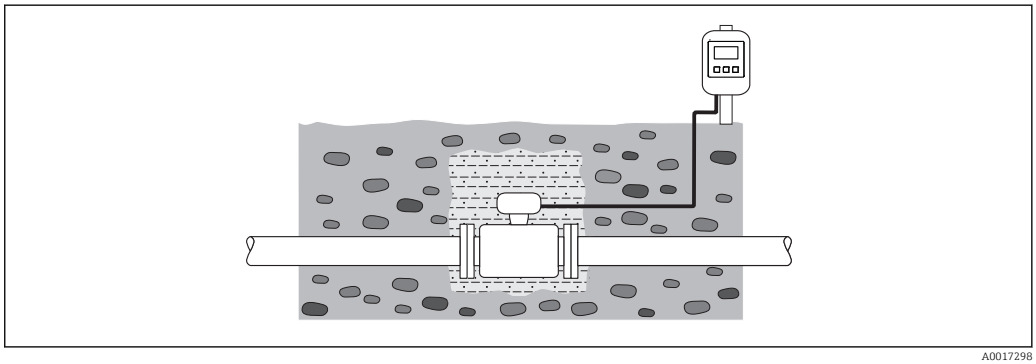

6.2 Mounting the measuring device

6.2.1 Required tools

For transmitter

- Torque wrench
- For wall mounting:
  Open-ended wrench for hexagonal screw max. M5
- For pipe mounting:
  - Open-ended wrench AF 8
  - Phillips head screwdriver PH 2
- For turning the transmitter housing (compact version):
  - Phillips head screwdriver PH 2
  - Torx screwdriver TX 20
  - Open-ended wrench AF 7

For sensor

For flanges and other process connections:
- Screws, nuts, seals etc. are not included in the scope of supply and must be provided by the customer.
- Appropriate mounting tools

6.2.2 Preparing the measuring device

1. Remove all remaining transport packaging.
2. Remove any protective covers or protective caps present from the sensor.
3. Remove stick-on label on the electronics compartment cover.

6.2.3 Mounting the sensor

⚠ WARNING

Danger due to improper process sealing!

- ▶ Ensure that the inside diameters of the gaskets are greater than or equal to that of the process connections and piping.
- ▶ Ensure that the gaskets are clean and undamaged.
- ▶ Install the gaskets correctly.

1. Ensure that the direction of the arrow on the sensor matches the flow direction of the medium.
2. To ensure compliance with device specifications, install the measuring device between the pipe flanges in a way that it is centered in the measurement section.
3. If using ground disks, comply with the Installation Instructions provided.
4. Observe required screw tightening torques (→ 🖹 25).
5. Install the measuring device or turn the transmitter housing so that the cable entries do not point upwards.

↳

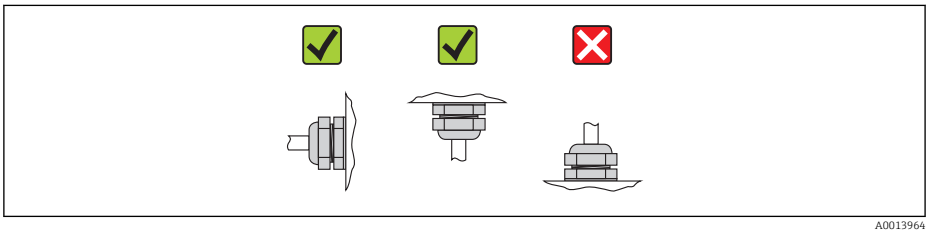

A0013964

Mounting the seals

⚠ CAUTION

An electrically conductive layer could form on the inside of the measuring tube!
Risk of measuring signal short circuit.
► Do not use electrically conductive sealing compounds such as graphite.

Comply with the following instructions when installing seals:
- Make sure that the seals do not protrude into the piping cross-section.
- For DIN flanges: only use seals according to DIN EN 1514-1.
- For "hard rubber" lining: additional seals are **always** required.
- For "polyurethane" lining: generally additional seals are **not** required.

Mounting the ground cable/ground disks

Comply with the information on potential equalization and detailed mounting instructions for the use of ground cables/ground disks (→ 🖹 43).

Screw tightening torques

Please note the following:
- The screw tightening torques listed below apply only to lubricated threads and to pipes not subjected to tensile stress.
- Tighten the screws uniformly and in diagonally opposite sequence.
- Overtightening the screws will deform the sealing faces or damage the seals.

Screw tightening torques for EN 1092-1 (DIN 2501), PN 6/10/16/25/40

Nominal diameter [mm]	Pressure rating [bar]	Threaded fasteners [mm]	Max. screw tightening torque [Nm]	
			Hard rubber	Polyurethane
25	PN 40	4 × M12	–	15
32	PN 40	4 × M16	–	24
40	PN 40	4 × M16	–	31
50	PN 40	4 × M16	48	40
65 [1)]	PN 16	8 × M16	32	27
65	PN 40	8 × M16	32	27
80	PN 16	8 × M16	40	34
80	PN 40	8 × M16	40	34
100	PN 16	8 × M16	43	36
100	PN 40	8 × M20	59	50
125	PN 16	8 × M16	56	48
125	PN 40	8 × M24	83	71
150	PN 16	8 × M20	74	63
150	PN 40	8 × M24	104	88
200	PN 10	8 × M20	106	91
200	PN 16	12 × M20	70	61
200	PN 25	12 × M24	104	92
250	PN 10	12 × M20	82	71
250	PN 16	12 × M24	98	85
250	PN 25	12 × M27	150	134
300	PN 10	12 × M20	94	81
300	PN 16	12 × M24	134	118

Nominal diameter [mm]	Pressure rating [bar]	Threaded fasteners [mm]	Max. screw tightening torque [Nm]	
			Hard rubber	Polyurethane
300	PN 25	16 × M27	153	138
350	PN 6	12 × M20	111	120
350	PN 10	16 × M20	112	118
350	PN 16	16 × M24	152	165
350	PN 25	16 × M30	227	252
400	PN 6	16 × M20	90	98
400	PN 10	16 × M24	151	167
400	PN 16	16 × M27	193	215
400	PN 25	16 × M33	289	326
450	PN 6	16 × M20	112	126
450	PN 10	20 × M24	153	133
450	PN 16	20 × M27	198	196
450	PN 25	20 × M33	256	253
500	PN 6	20 × M20	119	123
500	PN 10	20 × M24	155	171
500	PN 16	20 × M30	275	300
500	PN 25	20 × M33	317	360
600	PN 6	20 × M24	139	147
600	PN 10	20 × M27	206	219
600 [1)]	PN 16	20 × M33	415	443
600	PN 25	20 × M36	431	516
700	PN 6	24 × M24	148	139
700	PN 10	24 × M27	246	246
700	PN 16	24 × M33	278	318
700	PN 25	24 × M39	449	507
800	PN 6	24 × M27	206	182
800	PN 10	24 × M30	331	316
800	PN 16	24 × M36	369	385
800	PN 25	24 × M45	664	721
900	PN 6	24 × M27	230	637
900	PN 10	28 × M30	316	307
900	PN 16	28 × M36	353	398
900	PN 25	28 × M45	690	716
1000	PN 6	28 × M27	218	208
1000	PN 10	28 × M33	402	405
1000	PN 16	28 × M39	502	518
1000	PN 25	28 × M52	970	971
1200	PN 6	32 × M30	319	299
1200	PN 10	32 × M36	564	568
1200	PN 16	32 × M45	701	753
1400	PN 6	36 × M33	430	398
1400	PN 10	36 × M39	654	618

Nominal diameter [mm]	Pressure rating [bar]	Threaded fasteners [mm]	Max. screw tightening torque [Nm]	
			Hard rubber	Polyurethane
1400	PN 16	36 × M45	729	762
1600	PN 6	40 × M33	440	417
1600	PN 10	40 × M45	946	893
1600	PN 16	40 × M52	1007	1100
1800	PN 6	44 × M36	547	521
1800	PN 10	44 × M45	961	895
1800	PN 16	44 × M52	1108	1003
2000	PN 6	48 × M39	629	605
2000	PN 10	48 × M45	1047	1092
2000	PN 16	48 × M56	1324	1261

1) Designed acc. to EN 1092-1 (not to DIN 2501)

Screw tightening torques for ASME B16.5, Class 150/300

Nominal diameter		Pressure rating	Threaded fasteners	Max. screw tightening torque [Nm] ([lbf · ft])	
[mm]	[in]	[psi]	[in]	Hard rubber	Polyurethane
25	1	Class 150	4 × ½	–	7 (5)
25	1	Class 300	4 × 5/8	–	8 (6)
40	1 ½	Class 150	4 × ½	–	10 (7)
40	1 ½	Class 300	4 × ¾	–	15 (11)
50	2	Class 150	4 × 5/8	35 (26)	22 (16)
50	2	Class 300	8 × 5/8	18 (13)	11 (8)
80	3	Class 150	4 × 5/8	60 (44)	43 (32)
80	3	Class 300	8 × ¾	38 (28)	26 (19)
100	4	Class 150	8 × 5/8	42 (31)	31 (23)
100	4	Class 300	8 × ¾	58 (43)	40 (30)
150	6	Class 150	8 × ¾	79 (58)	59 (44)
150	6	Class 300	12 × ¾	70 (52)	51 (38)
200	8	Class 150	8 × ¾	107 (79)	80 (59)
250	10	Class 150	12 × 7/8	101 (74)	75 (55)
300	12	Class 150	12 × 7/8	133 (98)	103 (76)
350	14	Class 150	12 × 1	135 (100)	158 (117)
400	16	Class 150	16 × 1	128 (94)	150 (111)
450	18	Class 150	16 × 1 1/8	204 (150)	234 (173)
500	20	Class 150	20 × 1 1/8	183 (135)	217 (160)
600	24	Class 150	20 × 1 ¼	268 (198)	307 (226)

Screw tightening torques for AWWA C207, Class D

Nominal diameter		Threaded fasteners	Max. screw tightening torque [Nm] ([lbf · ft])	
[mm]	[in]	[in]	Hard rubber	Polyurethane
700	28	28 × 1 ¼	247 (182)	292 (215)
750	30	28 × 1 ¼	287 (212)	302 (223)
800	32	28 × 1 ½	394 (291)	422 (311)
900	36	32 × 1 ½	419 (309)	430 (317)
1000	40	36 × 1 ½	420 (310)	477 (352)
1050	42	36 × 1 ½	528 (389)	518 (382)
1200	48	44 × 1 ½	552 (407)	531 (392)
1350	54	44 × 1 ¾	730 (538)	–
1500	60	52 × 1 ¾	758 (559)	–
1650	66	52 × 1 ¾	946 (698)	–
1800	72	60 × 1 ¾	975 (719)	–
2000	78	64 × 2	853 (629)	–

Screw tightening torques for AS 2129, Table E

Nominal diameter	Threaded fasteners	Max. screw tightening torque [Nm]	
[mm]	[mm]	Hard rubber	Polyurethane
50	4 × M16	32	–
80	4 × M16	49	–
100	8 × M16	38	–
150	8 × M20	64	–
200	8 × M20	96	–
250	12 × M20	98	–
300	12 × M24	123	–
350	12 × M24	203	–
400	12 × M24	226	–
450	16 × M24	226	–
500	16 × M24	271	–
600	16 × M30	439	–
700	20 × M30	355	–
750	20 × M30	559	–
800	20 × M30	631	–
900	24 × M30	627	–
1000	24 × M30	634	–
1200	32 × M30	727	–

Screw tightening torques for AS 4087, PN 16

Nominal diameter	Threaded fasteners	Max. screw tightening torque [Nm]	
[mm]	[mm]	Hard rubber	Polyurethane
50	4 × M16	32	–
80	4 × M16	49	–

Nominal diameter [mm]	Threaded fasteners [mm]	Max. screw tightening torque [Nm]	
		Hard rubber	Polyurethane
100	4 × M16	76	–
150	8 × M20	52	–
200	8 × M20	77	–
250	8 × M20	147	–
300	12 × M24	103	–
350	12 × M24	203	–
375	12 × M24	137	–
400	12 × M24	226	–
450	12 × M24	301	–
500	16 × M24	271	–
600	16 × M27	393	–
700	20 × M27	330	–
750	20 × M30	529	–
800	20 × M33	631	–
900	24 × M33	627	–
1000	24 × M33	595	–
1200	32 × M33	703	–

Screw tightening torques for JIS B2220, 10/20K

Nominal diameter [mm]	Pressure rating [bar]	Threaded fasteners [mm]	Max. screw tightening torque [Nm]	
			Hard rubber	Polyurethane
25	10K	4 × M16	–	19
25	20K	4 × M16	–	19
32	10K	4 × M16	–	22
32	20K	4 × M16	–	22
40	10K	4 × M16	–	24
40	20K	4 × M16	–	24
50	10K	4 × M16	40	33
50	20K	8 × M16	20	17
65	10K	4 × M16	55	45
65	20K	8 × M16	28	23
80	10K	8 × M16	29	23
80	20K	8 × M20	42	35
100	10K	8 × M16	35	29
100	20K	8 × M20	56	48
125	10K	8 × M20	60	51
125	20K	8 × M22	91	79
150	10K	8 × M20	75	63
150	20K	12 × M22	81	72
200	10K	12 × M20	61	52
200	20K	12 × M22	91	80

Nominal diameter [mm]	Pressure rating [bar]	Threaded fasteners [mm]	Max. screw tightening torque [Nm]	
			Hard rubber	Polyurethane
250	10K	12 × M22	100	87
250	20K	12 × M24	159	144
300	10K	16 × M22	74	63
300	20K	16 × M24	138	124

6.2.4 Mounting the transmitter of the remote version

⚠ CAUTION

Ambient temperature too high!

Danger of electronics overheating and housing deformation.

- ▶ Do not exceed the permitted maximum ambient temperature (→ 21).
- ▶ If operating outdoors: Avoid direct sunlight and exposure to weathering, particularly in warm climatic regions.

⚠ CAUTION

Excessive force can damage the housing!

- ▶ Avoid excessive mechanical stress.

The transmitter of the remote version can be mounted in the following ways:

- Wall mounting
- Pipe mounting

Wall mounting

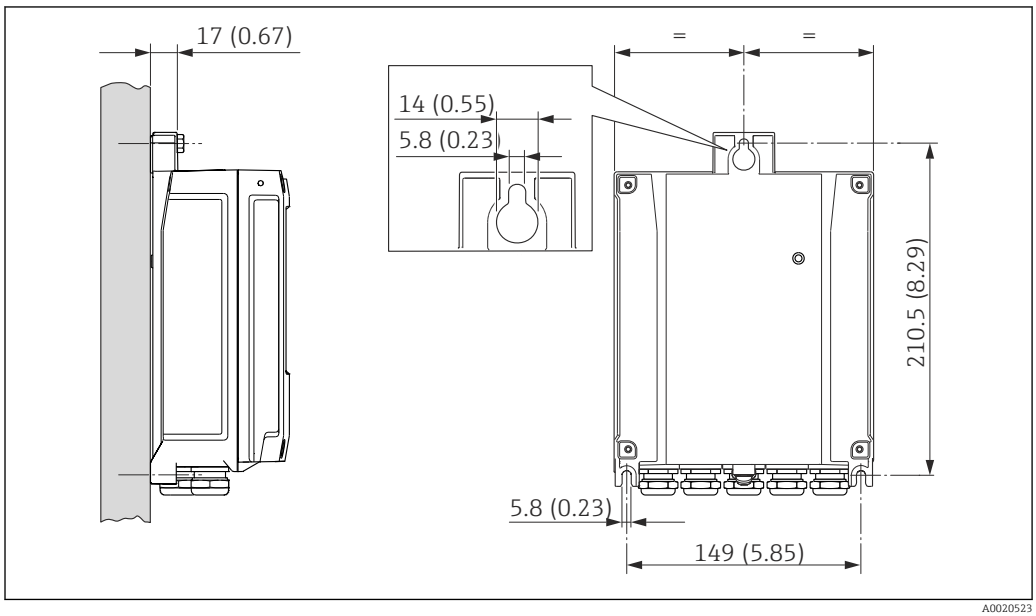

7 *Engineering unit mm (in)*

1. Drill the holes.
2. Insert wall plugs into the drilled holes.
3. Screw in the securing screws slightly at first.
4. Fit the transmitter housing over the securing screws and mount in place.
5. Tighten the securing screws.

Post mounting

⚠ WARNING

Excessive tightening torque applied to the fixing screws on plastic housing!
Risk of damaging the plastic transmitter.
▶ Tighten the fixing screws as per the tightening torque: 2 Nm (1.5 lbf ft)

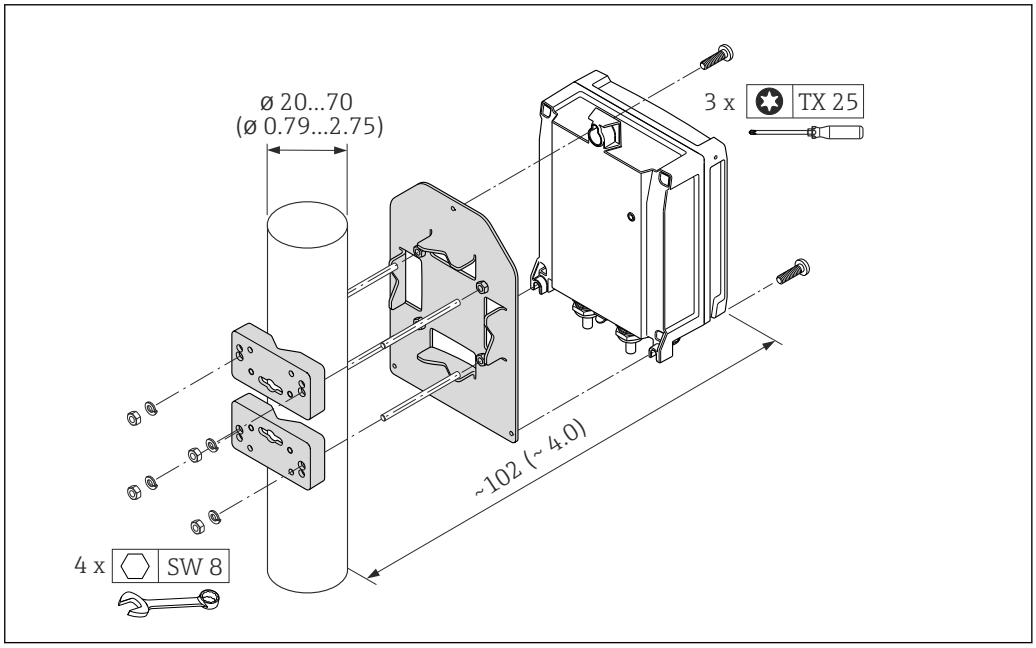

8 Engineering unit mm (in)

6.2.5 Turning the transmitter housing

To provide easier access to the connection compartment or display module, the transmitter housing can be turned.

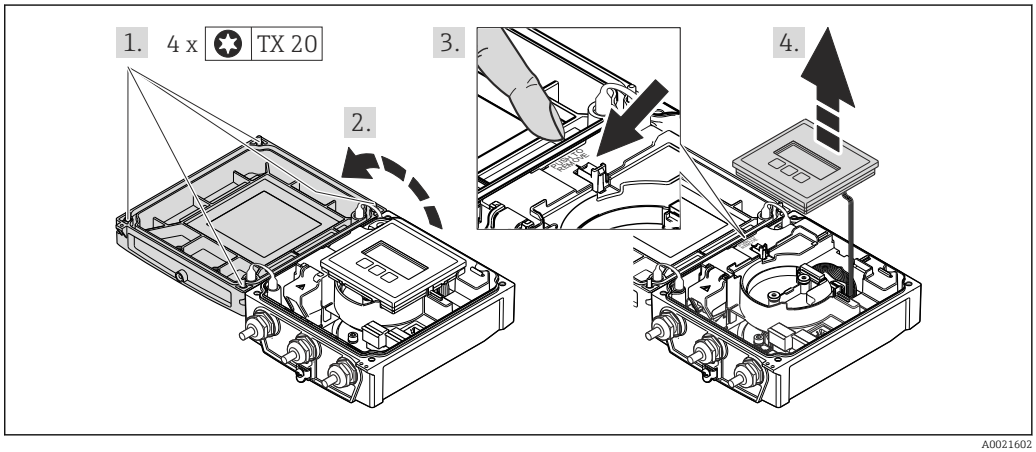

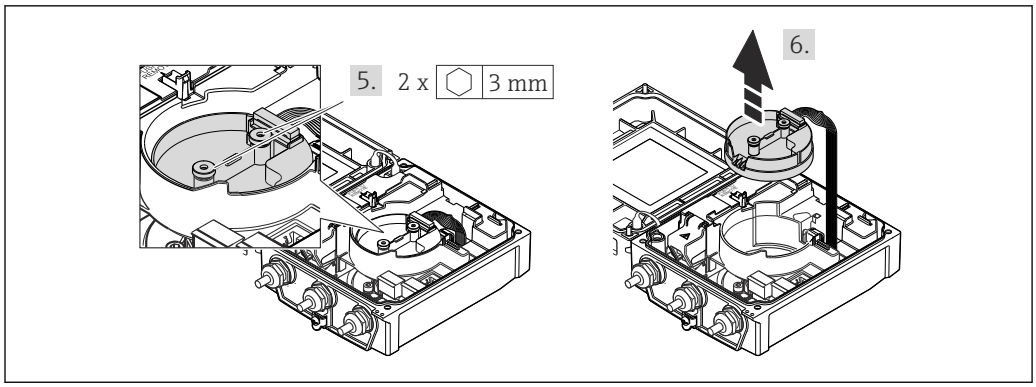

A0021603

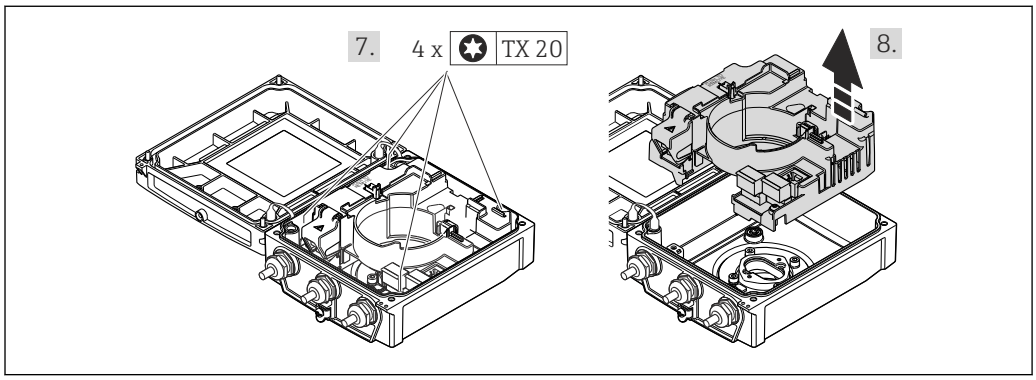

A0021604

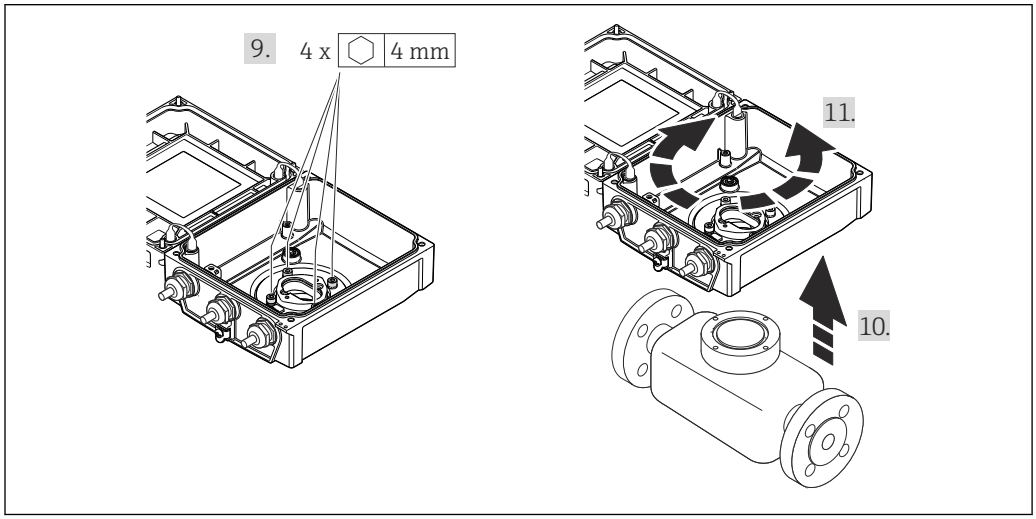

A0021605

1. Loosen the fixing screws of the housing cover (when reassembling, pay attention to the tightening torque (→ 🖹 33)).
2. Open the housing cover.
3. Unlock the display module.
4. Remove the display module.
5. Loosen the fixing screws of the smart sensor electronics module (when reassembling, pay attention to the tightening torque (→ 🖹 33)).
6. Remove the smart sensor electronics module (when reassembling, pay attention to the coding of the plug (→ 🖹 33)).
7. Loosen the fixing screws of the main electronics module (when reassembling, pay attention to the tightening torque (→ 🖹 33)).
8. Remove the main electronics module.

9. Loosen the fixing screws of the transmitter housing (when reassembling, pay attention to the tightening torque (→ 33)).
10. Lift the transmitter housing.
11. Turn the housing to the desired position in increments of 90°.

Reassembling the transmitter housing

WARNING

Excessive tightening torque applied to the fixing screws!
Damage to the transmitter.
- When reassembling, tighten the fixing screws as per the tightening torque:

Step	Fixing screw	Tightening torques for housing made of:	
		Aluminum	Plastic
1	Housing cover	2.5 Nm (1.8 lbf ft)	1 Nm (0.7 lbf ft)
5	Smart sensor electronics module	0.6 Nm (0.4 lbf ft)	
7	Main electronics module	1.5 Nm (1.1 lbf ft)	
10	Transmitter housing	5.5 Nm (4.1 lbf ft)	

NOTICE

Plug of the smart sensor electronics module connected incorrectly!
No measuring signal is output.
- Plug in the plug of the smart sensor electronics module as per the coding.

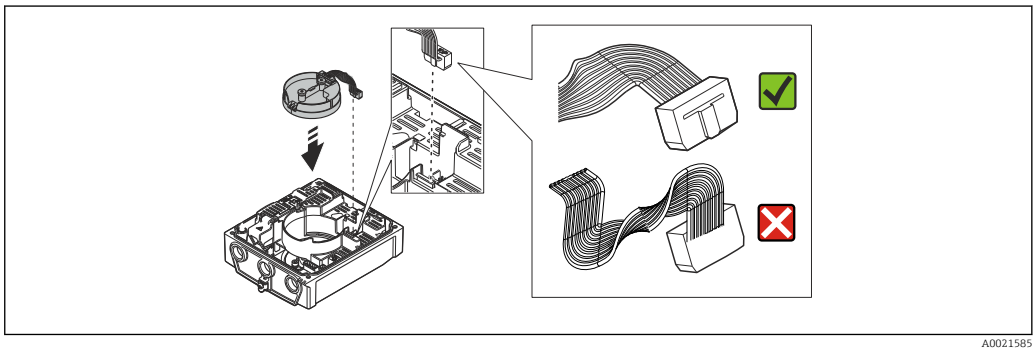

A0021585

- Reverse the procedure to reassemble the measuring device.

6.2.6 Turning the display module

The display module can be turned to optimize display readability and operability.

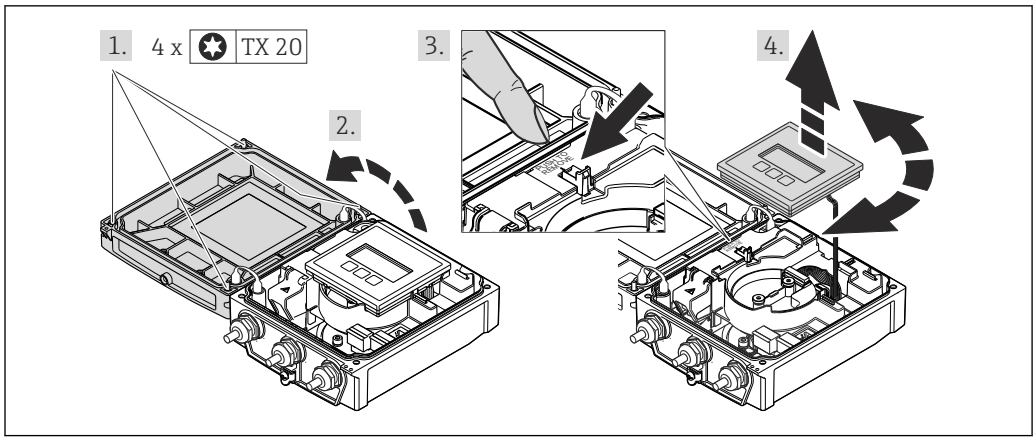

A0021617

1. Loosen the fixing screws of the housing cover (when reassembling, pay attention to the tightening torque (→ 34)).
2. Open the housing cover.
3. Unlock the display module.
4. Pull out the display module and turn it to the desired position in increments of 90°.

Reassembling the transmitter housing

WARNING

Excessive tightening torque applied to the fixing screws!
Damage to the transmitter.
- When reassembling, tighten the fixing screws as per the tightening torque:

Step	Fixing screw	Tightening torque for housing made of:	
		Aluminum	Plastic
1	Housing cover	2.5 Nm (1.8 lbf ft)	1 Nm (0.7 lbf ft)

- Reverse the procedure to reassemble the measuring device.

6.3 Post-installation check

Is the device undamaged (visual inspection)?	❑
Does the measuring device conform to the measuring point specifications? For example: ▪ Process temperature ▪ Process pressure (refer to the section on "Pressure-temperature ratings" in the "Technical Information" document) ▪ Ambient temperature ▪ Measuring range	❑
Has the correct orientation for the sensor been selected ? ▪ According to sensor type ▪ According to medium temperature ▪ According to medium properties (outgassing, with entrained solids)	❑
Does the arrow on the sensor nameplate match the direction of flow of the fluid through the piping ?	❑
Are the measuring point identification and labeling correct (visual inspection)?	❑
Is the device adequately protected from precipitation and direct sunlight?	❑
Have the fixing screws been tightened with the correct tightening torque?	❑

7 Electrical connection

The measuring device does not have an internal circuit breaker. For this reason, assign the measuring device a switch or power-circuit breaker so that the power supply line can be easily disconnected from the mains.

7.1 Connection conditions

7.1.1 Required tools

- Torque wrench
- For cable entries: Use corresponding tools
- For housing cover: Torx screwdriver or flat-blade screwdriver
- Wire stripper
- When using stranded cables: crimping tool for ferrule

7.1.2 Requirements for connecting cable

The connecting cables provided by the customer must fulfill the following requirements.

Electrical safety

In accordance with applicable federal/national regulations.

Permitted temperature range

- −40 °C (−40 °F) to +80 °C (+176 °F)
- Minimum requirement: cable temperature range ≥ ambient temperature +20 K

Power supply cable

Standard installation cable is sufficient.

Signal cable

PROFIBUS DP

The IEC 61158 standard specifies two types of cable (A and B) for the bus line which can be used for every transmission rate. Cable type A is recommended.

Cable type	A
Characteristic impedance	135 to 165 Ω at a measuring frequency of 3 to 20 MHz
Cable capacitance	<30 pF/m
Wire cross-section	>0.34 mm^2 (22 AWG)
Cable type	Twisted pairs
Loop resistance	≤110 Ω/km
Signal damping	Max. 9 dB over the entire length of the cable cross-section
Shielding	Copper braided shielding or braided shielding with foil shield. When grounding the cable shield, observe the grounding concept of the plant.

Connecting cable for remote version

Electrode cable

Standard cable	3 ×0.38 mm² (20 AWG) with common, braided copper shield (ϕ ~7 mm (0.28 in) and individual shielded cores
Cable for empty pipe detection (EPD)	4 ×0.38 mm² (20 AWG) with common, braided copper shield (ϕ ~7 mm (0.28 in) and individual shielded cores
Conductor resistance	≤50 Ω/km (0.015 Ω/ft)
Capacitance: core/shield	≤420 pF/m (128 pF/ft)
Operating temperature	–20 to +80 °C (–68 to +176 °F)

Coil current cable

Standard cable	2 ×0.75 mm² (18 AWG) with common, braided copper shield (ϕ ~ 7 mm (0.28")) and individually shielded cores
Conductor resistance	≤37 Ω/km (0.011 Ω/ft)
Capacitance: core/core, shield grounded	≤120 pF/m (37 pF/ft)
Operating temperature	–20 to +80 °C (–68 to +176 °F)
Test voltage for cable insulation	≤ AC 1433 V r.m.s. 50/60 Hz or ≥ DC 2026 V

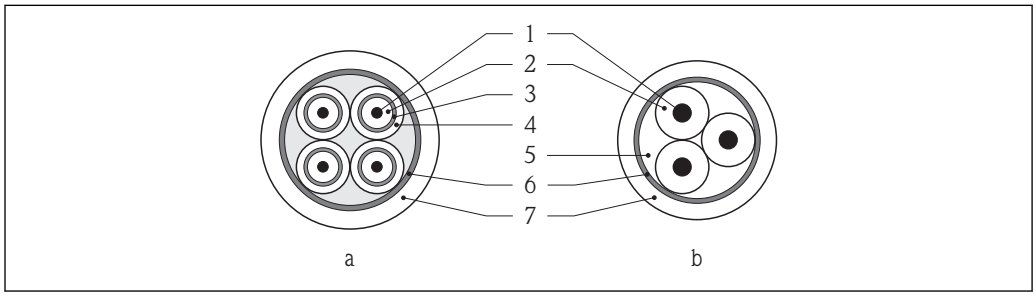

A0003194

9 *Cable cross-section*

a Electrode cable
b Coil current cable
1 Core
2 Core insulation
3 Core shield
4 Core jacket
5 Core reinforcement
6 Cable shield
7 Outer jacket

Reinforced connecting cables

Reinforced connecting cables with an additional, reinforcing metal braid should be used for:
- When laying the cable directly in the ground
- Where there is a risk of damage from rodents
- If using the device below IP68 degree of protection

Operation in zones of severe electrical interference

The measuring system meets the general safety requirements (→ 152) and EMC specifications (→ 132).

Grounding is by means of the ground terminal provided for the purpose inside the connection housing. The stripped and twisted lengths of cable shield to the ground terminal must be as short as possible.

Cable diameter

- Cable glands supplied:
  - For standard cable: M20 × 1.5 with cable ϕ6 to 12 mm (0.24 to 0.47 in)
  - For reinforced cable: M20 × 1.5 with cable ϕ9.5 to 16 mm (0.37 to 0.63 in)
- (Plug-in) spring terminals for wire cross-sections 0.5 to 2.5 mm² (20 to 14 AWG)

7.1.3 Terminal assignment

Transmitter

PROFIBUS DP connection version

The sensor can be ordered with terminals or a device plug.

Connection methods available		Possible options for order code "Electrical connection"
Outputs	**Power supply**	
Terminals	Terminals	▪ Option **A**: coupling M20x1 ▪ Option **B**: thread M20x1 ▪ Option **C**: thread G ½" ▪ Option **D**: thread NPT ½"
Device plug	Terminals	▪ Option **L**: plug M12x1 + thread NPT ½" ▪ Option **N**: plug M12x1 + coupling M20 ▪ Option **P**: plug M12x1 + thread G ½" ▪ Option **U**: plug M12x1 + thread M20

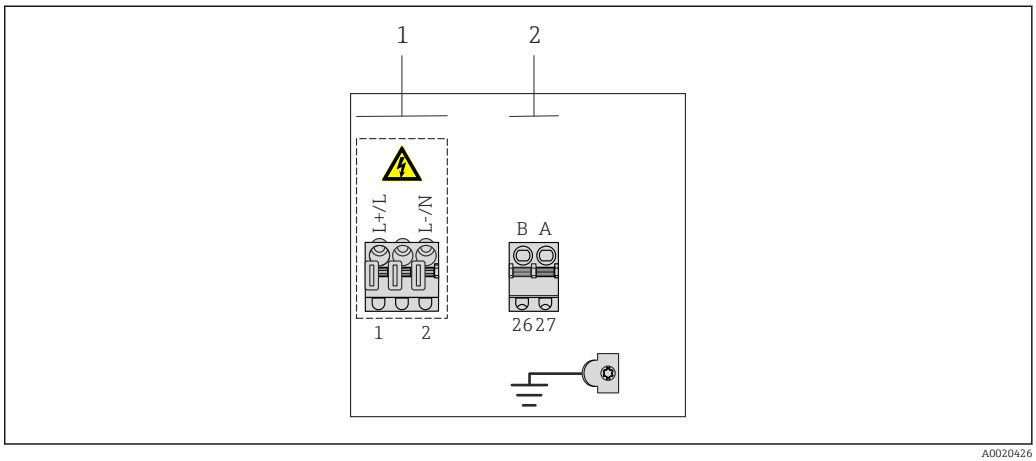

1 Supply voltage (wide range power unit)
2 PROFIBUS DP

Supply voltage

Order code for "Power supply"	Terminal numbers	
	1 (L+/L)	**2 (L-/N)**
Option **L** (wide range power unit)	AC100 to 240 V	
	AC/DC24 V	

PROFIBUS DP signal transmission

Order code for "Output" and "Input"	Terminal numbers	
	26 (RxD/TxD-P)	27 (RxD/TxD-N)
Option **L**	B	A
Order code for "Output": Option L: PROFIBUS DP, for use in non-hazardous areas and Zone 2/div. 2		

Remote version

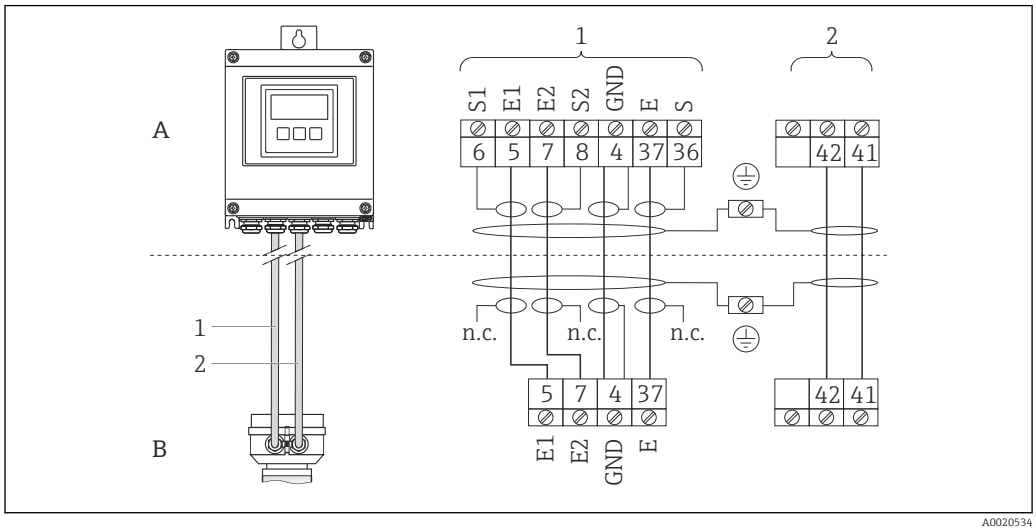

10 Remote version terminal assignment

A Transmitter wall-mount housing
B Sensor connection housing
1 Electrode cable
2 Coil current cable
n.c. Not connected, insulated cable shields

Terminal No. and cable colors: 6/5 = brown; 7/8 = white; 4 = green; 36/37 = yellow

7.1.4 Preparing the measuring device

1. Remove dummy plug if present.
2. If measuring device is delivered with cable glands:
   Observe cable specification (→ 35).

7.1.5 Preparing the connecting cable for the remote version

When terminating the connecting cable, pay attention to the following points:
- In the case of electrode cables, make sure that the ferrules do not touch the core shields on the sensor side. Minimum distance = 1 mm (exception: green “GND” cable)
- In the case of coil current cables, insulate one core of the three-core wire at the level of the core reinforcement. You only require two cores for the connection.
- Fit the fine-wire cores with ferrules.

Transmitter

Electrode cable	Coil current cable
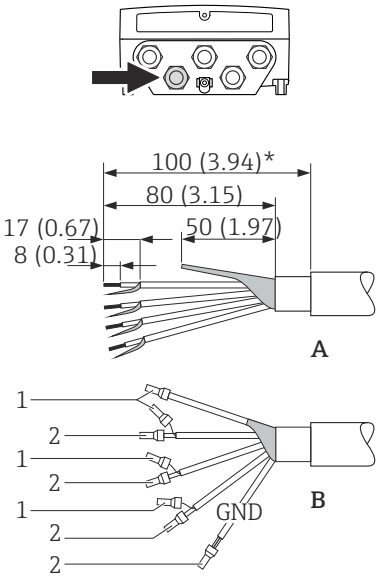 *11 Engineering unit mm (in)*	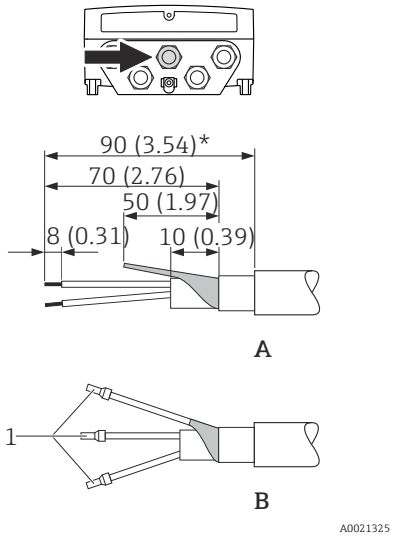 *12 Engineering unit mm (in)*
A = Termination of the cables B = Termination of the fine-wire cores with ferrules 1 = Red ferrules, ϕ1.0 mm (0.04 in) 2 = White ferrules, ϕ0.5 mm (0.02 in) * = Stripping only for reinforced cables	

Sensor

Electrode cable	Coil current cable
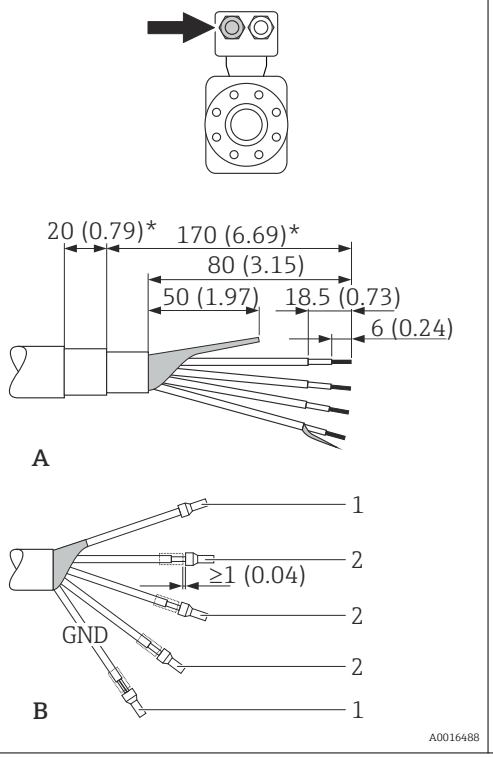	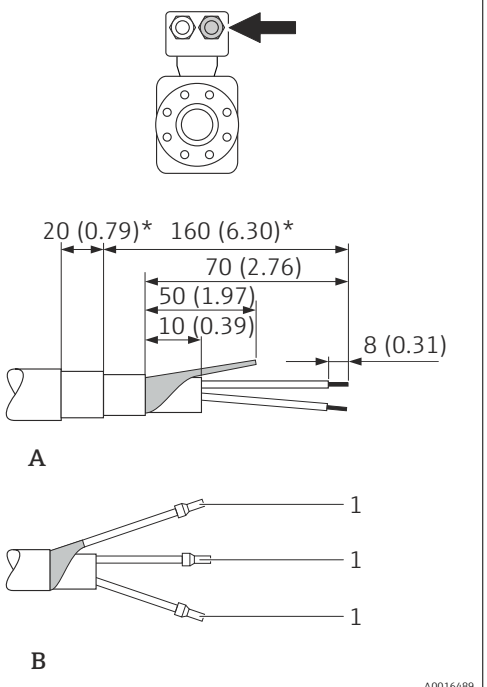

A = Termination of the cables
B = Termination of the fine-wire cores with ferrules
1 = Red ferrules, ϕ1.0 mm (0.04 in)
2 = White ferrules, ϕ0.5 mm (0.02 in)
* = Stripping only for reinforced cables

7.2 Connecting the measuring device

⚠ WARNING

Risk of electric shock! Components carry dangerous voltages!

- ▶ Have electrical connection work carried out by correspondingly trained specialists only.
- ▶ Observe applicable federal/national installation codes and regulations.
- ▶ Comply with local workplace safety regulations.
- ▶ Observe grounding concept of the plant.
- ▶ Never mount or wire the measuring device while it is connected to the supply voltage.
- ▶ Before the supply voltage is applied, connect the protective ground to the measuring device.

7.2.1 Connecting the remote version

⚠ WARNING

Risk of damaging the electronic components!

- ▶ Ground the remote version: connect the sensor and transmitter to the same potential equalization.
- ▶ Only connect the sensor to a transmitter with the same serial number.
- ▶ Ground the connection housing of the sensor via the external screw terminal.

The following procedure (in the action sequence given) is recommended for the remote version:

1. Mount the sensor and transmitter.
2. Connect the connecting cable.

3. Connect the transmitter.

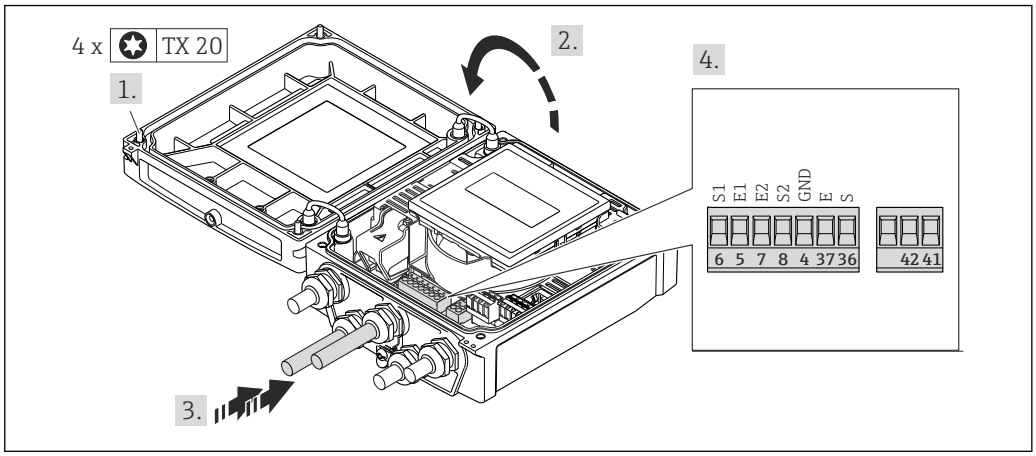

13 *Transmitter: main electronics module with terminals*

1. Loosen the 4 fixing screws on the housing cover.
2. Open the housing cover.
3. Push the cable through the cable entry . To ensure tight sealing, do not remove the sealing ring from the cable entry.
4. Strip the cable and cable ends. In the case of stranded cables, also fit ferrules (→ 38).
5. Connect the cable in accordance with the terminal assignment (→ 38).
6. Firmly tighten the cable glands.
7. **WARNING!** Housing degree of protection may be voided due to insufficient sealing of the housing. Screw in the screw without using any lubricant.

   Reverse the removal procedure to reassemble the transmitter.

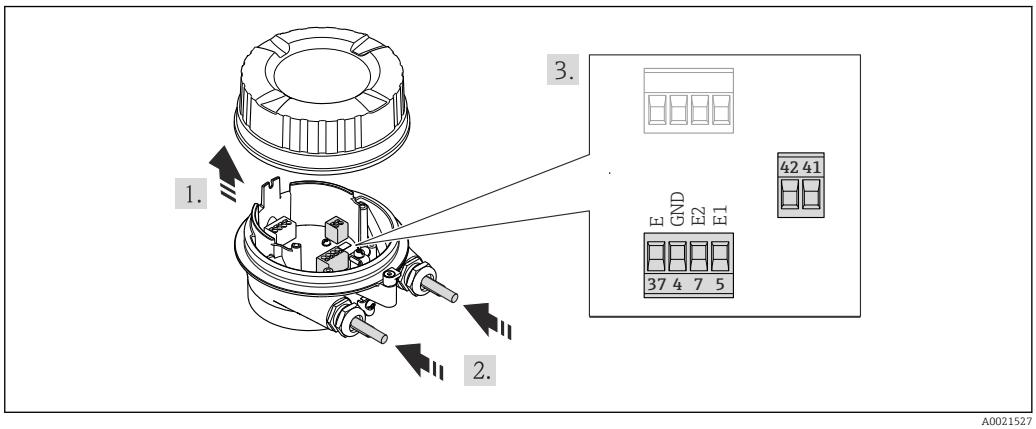

14 *Sensor: connection module*

1. Loosen the securing clamp of the housing cover.
2. Unscrew and lift off the housing cover.
3. **NOTICE!** For conduit extensions: Fit O-ring on cable and push it back sufficiently. When inserting the cable, the O-ring must be located outside the conduit extension.

   Push the cable through the cable entry . To ensure tight sealing, do not remove the sealing ring from the cable entry.
4. Strip the cable and cable ends. In the case of stranded cables, also fit ferrules (→ 38).
5. Connect the cable in accordance with the terminal assignment (→ 38).

6. Firmly tighten the cable glands.
7. **WARNING!** Housing degree of protection may be voided due to insufficient sealing of the housing. Screw in the screw without using any lubricant. The threads on the cover are coated with a dry lubricant.

   Reverse the procedure to reassemble the sensor.

7.2.2 Connecting the transmitter

⚠ WARNING

Housing degree of protection may be voided due to insufficient sealing of the housing.

▶ Screw in the screw without using any lubricant. The threads on the cover are coated with a dry lubricant.

Tightening torques for plastic housing

Housing cover fixing screw	1.3 Nm
Cable entry	4.5 to 5 Nm
Ground terminal	2.5 Nm

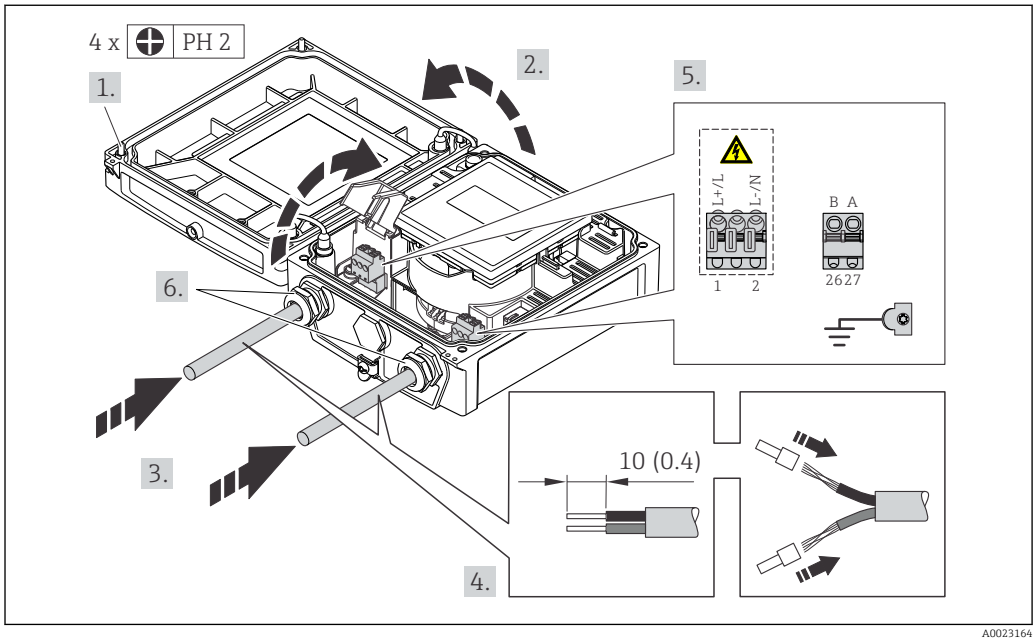

15 *Connecting the supply voltage and PROFIBUS DP*

1. Loosen the 4 fixing screws on the housing cover.
2. Open the housing cover.
3. Push the cable through the cable entry . To ensure tight sealing, do not remove the sealing ring from the cable entry.
4. Strip the cable and cable ends. In the case of stranded cables, also fit wire end ferrules.
5. Connect the cable in accordance with the terminal assignment (→ 37). For supply voltage: open the shock protection cover.
6. Firmly tighten the cable glands.
7. **WARNING!** Housing degree of protection may be voided due to insufficient sealing of the housing. Screw in the screw without using any lubricant.

   Reverse the removal procedure to reassemble the transmitter.

7.2.3 Ensuring potential equalization

CAUTION

Electrode damage can result in the complete failure of the device!

- Make sure that the fluid and sensor have the same electrical potential.
- Pay attention to internal grounding concepts in the company.
- Pay attention to the pipe material or grounding.

Connection examples for standard situations

Metal, grounded pipe

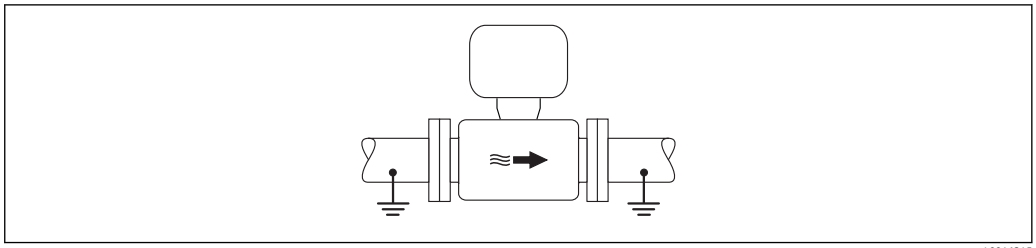

A0016315

16 *Potential equalization via measuring tube*

Connection example in special situations

Unlined and ungrounded metal pipe

This connection method also applies in situations where:
- The customary potential equalization is not used
- Equalizing currents are present

Ground cable	Copper wire, at least6 mm^2 (0.0093 in^2)

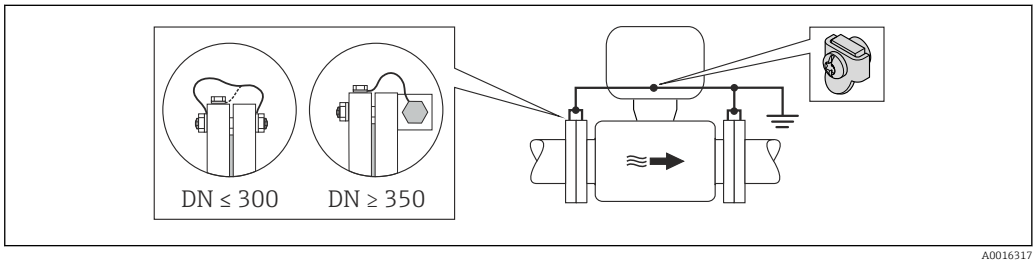

A0016317

17 *Potential equalization via ground terminal and pipe flanges*

1. Connect both sensor flanges to the pipe flange via a ground cable and ground them.
2. If DN ≤ 300 (12"): Mount the ground cable directly on the conductive flange coating of the sensor with the flange screws. If DN ≥ 350 (14"): Mount the ground cable directly on the metal transport bracket. Observe torques (→ 25).
3. Connect the connection housing of the transmitter or sensor to ground potential by means of the ground terminal provided for the purpose.

For remote device versions, the ground terminal in the example always refers to the sensor and **not** to the transmitter.

Plastic pipe or pipe with insulating liner

This connection method also applies in situations where:
- The customary potential equalization is not used
- Equalizing currents are present

Ground cable	Copper wire, at least6 mm² (0.0093 in²)

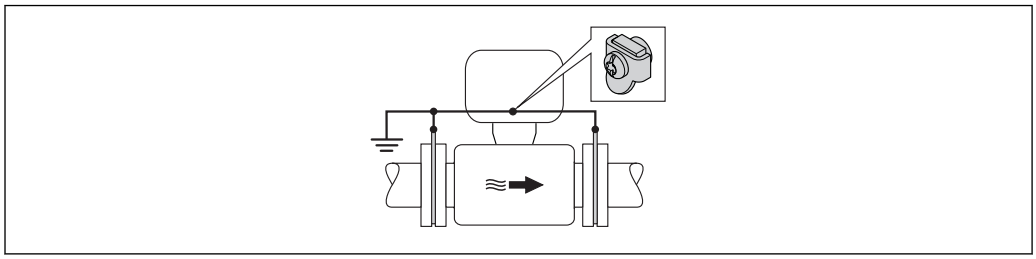

A0016318

18 *Potential equalization via ground terminal and ground disks*

1. Connect the ground disks to the ground terminal via the ground cable.
2. Connect the ground disks to ground potential.

For remote device versions, the ground terminal in the example always refers to the sensor and **not** to the transmitter.

Pipe with a cathodic protection unit

This connection method is only used if the following two conditions are met:
- Metal pipe without liner or pipe with electrically conductive liner
- Cathodic protection is integrated in the personal protection equipment

Ground cable	Copper wire, at least6 mm² (0.0093 in²)

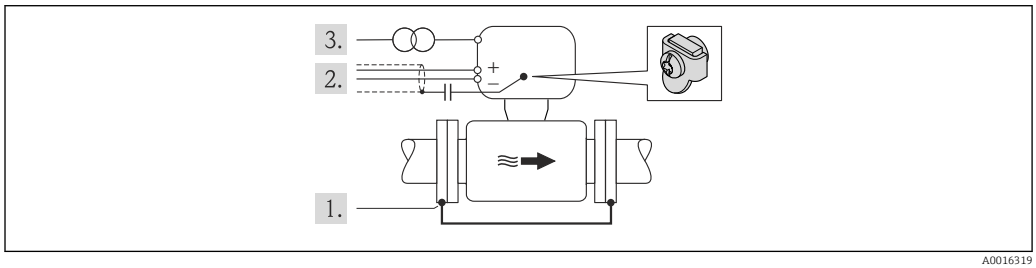

A0016319

Prerequisite: The sensor is installed in the pipe in a way that provides electrical insulation.

1. Connect the two flanges of the pipe to one another via a ground cable.
2. Guide the shield of the signal lines through a capacitor.
3. Connect the measuring device to the power supply such that it is floating in relation to the protective ground (isolation transformer).

For remote device versions, the ground terminal in the example always refers to the sensor and **not** to the transmitter.

7.3 Special connection instructions

7.3.1 Connection examples

PROFIBUS DP

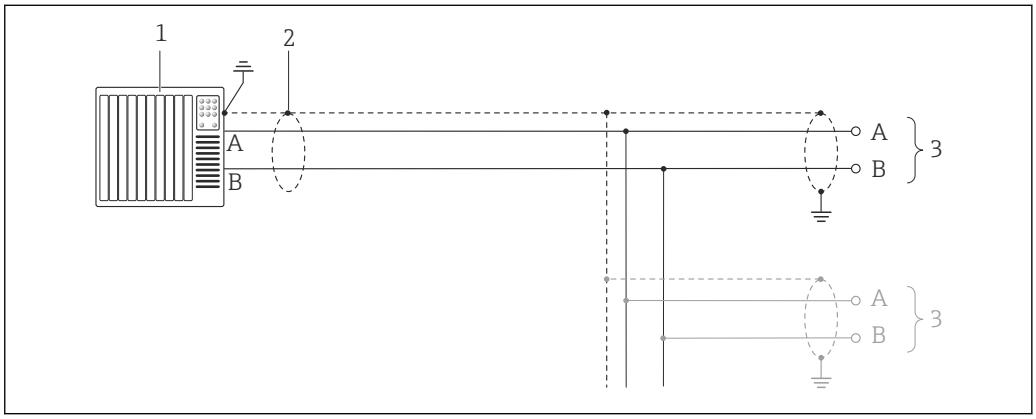

19 *Connection example for PROFIBUS DP, non-hazardous area and Zone 2/Div. 2*

1 *Control system (e.g. PLC)*
2 *Cable shield: the cable shield must be grounded at both ends to comply with EMC requirements; observe cable specifications (→ 35)*
3 *Transmitter*

If baud rates > 1.5 MBaud an EMC cable entry must be used and the cable shield must continue as far as the terminal wherever possible.

7.4 Hardware settings

7.4.1 Setting the device address

PROFIBUS DP

The address must always be configured for a PROFIBUS DP/PA device. The valid address range is between 1 and 126. In a PROFIBUS DP/PA network, each address can only be assigned once. If an address is not configured correctly, the device is not recognized by the master. All measuring devices are delivered from the factory with the device address 126 and with the software addressing method.

Setting the address

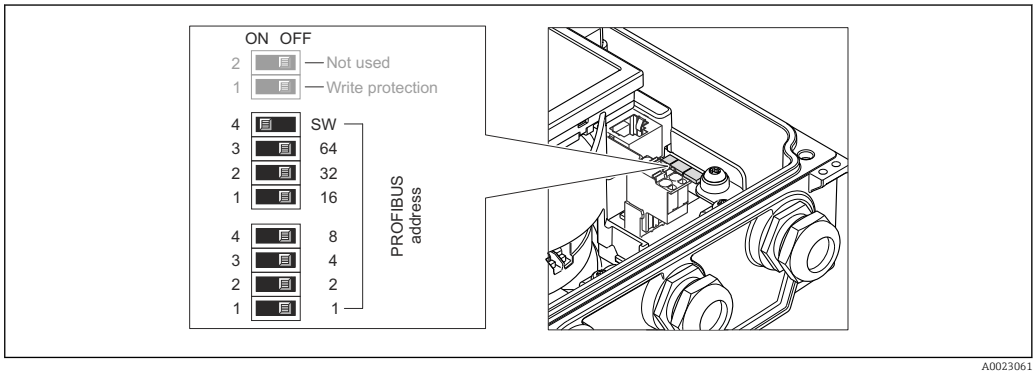

20 *Addressing using DIP switches on the I/O electronics module*

1. Loosen the 4 fixing screws on the housing cover.
2. Disable software addressing (OFF) via the top DIP switch 4 (SW).
3. Set the desired device address via the corresponding DIP switches.
   ↳ Example (→ 20, 45): 1 + 16 + 32 = device address 49

   The device demands rebooting after 10 s. After rebooting, hardware addressing is enabled with the configured IP address.
4. Reverse the removal procedure to reassemble the transmitter.

7.4.2 Enabling the terminating resistor

PROFIBUS DP

To avoid incorrect communication transmission caused by impedance mismatch, terminate the PROFIBUS DP cable correctly at the start and end of the bus segment.

- If the device is operated with a baud rate of 1.5 MBaud and under:
  For the last transmitter on the bus, terminate via DIP switch 2 (bus termination) and DIP switch 1 and 3 (bus polarization). Setting: ON – ON – ON (→ 21, 46).
- For baud rates > 1.5 MBaud:
  Due to the capacitance load of the user and the line reflections generated as a result, ensure that an external bus terminator is used.

It is generally advisable to use an external bus terminator as the entire segment can fail if a device that is terminated internally is defective.

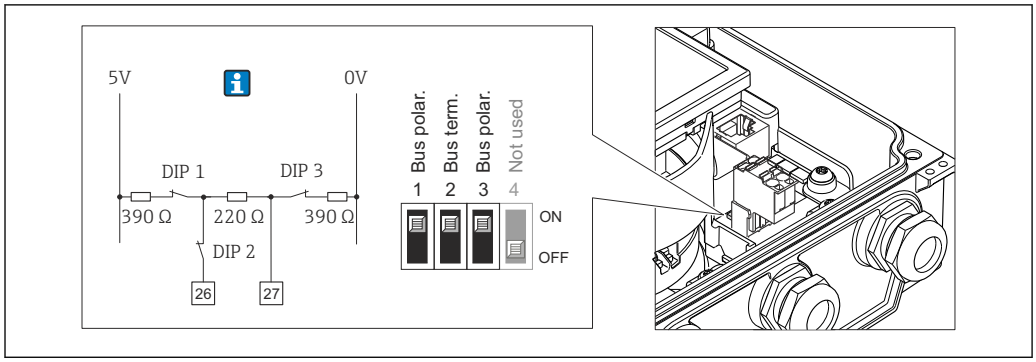

21 *Termination using DIP switches on the I/O electronics module (for baud rates < 1.5 MBaud)*

7.5 Ensuring the degree of protection

7.5.1 Degree of protection IP66/67, Type 4X enclosure

The measuring device fulfills all the requirements for the IP66/67 degree of protection, Type 4X enclosure.

To guarantee IP66/67 degree of protection, Type 4X enclosure, carry out the following steps after the electrical connection:

1. Check that the housing seals are clean and fitted correctly. Dry, clean or replace the seals if necessary.
2. Tighten all housing screws and screw covers.
3. Firmly tighten the cable glands.
4. To ensure that moisture does not enter the cable entry, route the cable so that it loops down before the cable entry ("water trap").

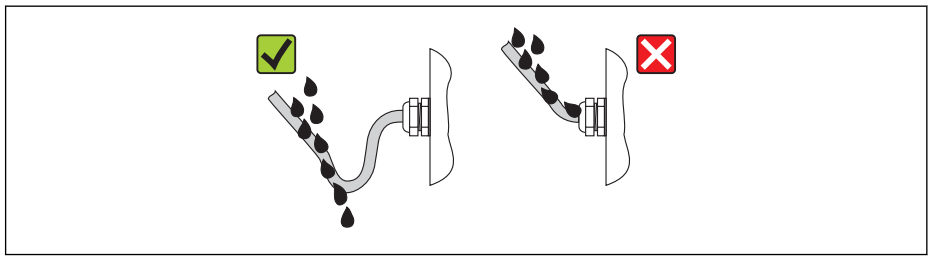

5. Insert dummy plugs into unused cable entries.

7.5.2 Degree of protection IP68, Type 6P enclosure, with "Cust-potted" option

Depending on the version, the sensor fulfills all the requirements for the IP68 degree of protection, Type 6P enclosure (→ 🖹 132) and can be used as a remote version (→ 🖹 23).

The degree of protection of the transmitter is always only IP66/67, Type 4X enclosure and the transmitter must therefore be treated accordingly (→ 🖹 46).

To guarantee IP68 degree of protection, Type 6P enclosure for the "Cust-potted" options, carry out the following steps after the electrical connection:

1. Firmly tighten the cable glands (torque: 2 to 3.5 Nm) until there is no gap between the bottom of the cover and the housing support surface.
2. Firmly tighten the union nut of the cable glands.
3. Pot the field housing with a potting compound.
4. Check that the housing seals are clean and fitted correctly. Dry, clean or replace the seals if necessary.
5. Tighten all housing screws and screw covers (torque: 20 to 30 Nm).

7.6 Post-connection check

Are cables or the device undamaged (visual inspection)?	❑
Do the cables comply with the requirements (→ 🖹 35)?	❑
Do the cables have adequate strain relief?	❑
Are all the cable glands installed, firmly tightened and leak-tight? Cable run with "water trap" (→ 🖹 46) ?	❑
Only for remote version: is the sensor connected to the right transmitter? Check the serial number on the nameplate of the sensor and transmitter.	❑
Does the supply voltage match the specifications on the transmitter nameplate ?	❑
Is the terminal assignment correct ?	❑
If supply voltage is present, do values appear on the display module?	❑
Is the potential equalization established correctly (→ 🖹 43)?	❑
Are all housing covers installed and the screws tightened with the correct tightening torque?	❑

8 Operation options

8.1 Overview of operation options

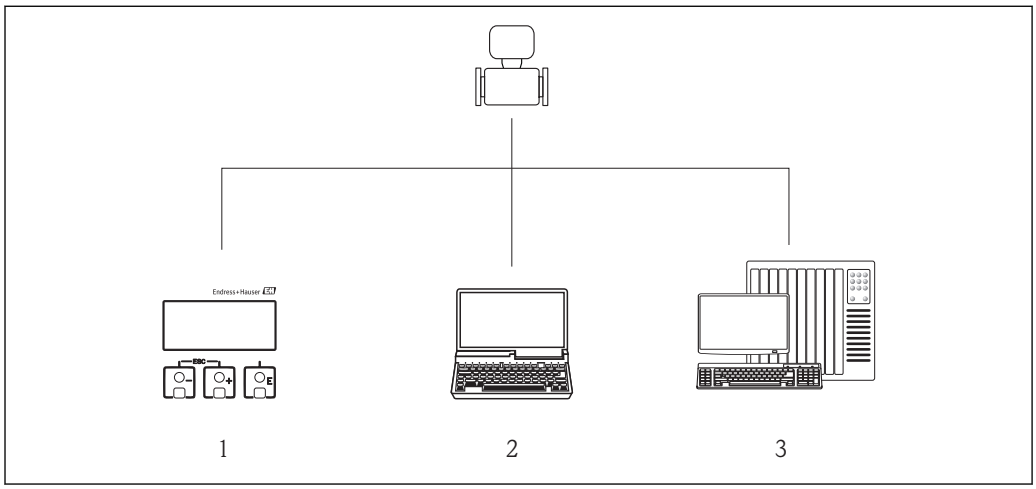

A0019091

1 *Local operation via display module*
2 *Computer with Web browser (e.g. Internet Explorer) or with operating tool (e.g. FieldCare, AMS Device Manager, SIMATIC PDM)*
3 *Control system (e.g. PLC)*

For custody transfer, once the device has been put into circulation or sealed, its operation is restricted.

8.2 Structure and function of the operating menu

8.2.1 Structure of the operating menu

For an overview of the operating menu with menus and parameters (→ 156)

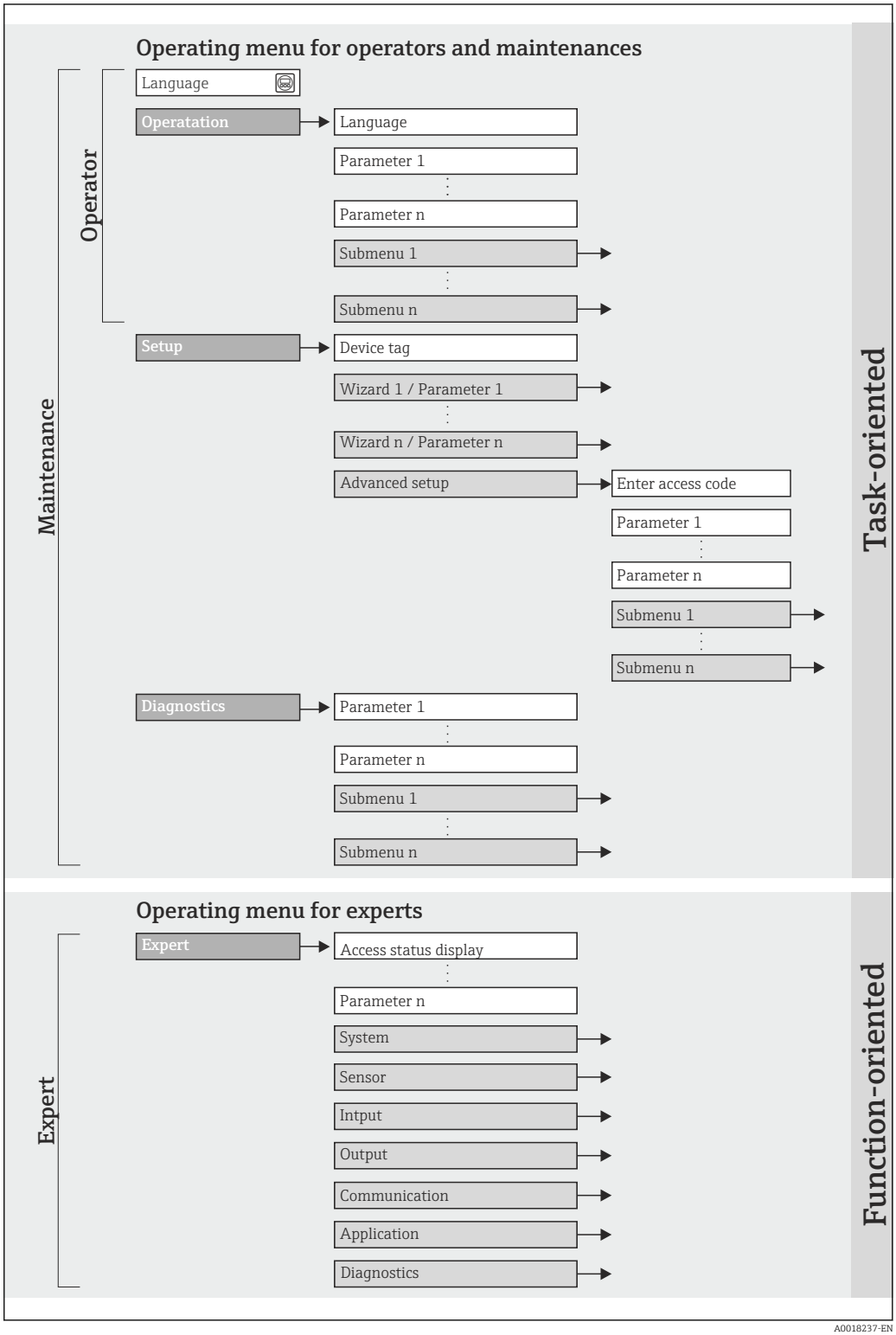

22 *Schematic structure of the operating menu*

8.2.2 Operating philosophy

The individual parts of the operating menu are assigned to certain user roles (operator, maintenance etc.). Each user role contains typical tasks within the device lifecycle.

Menu		User role and tasks	Content/meaning
Language	task-oriented	**Role "Operator", "Maintenance"** Tasks during operation: ▪ Configuring the operational display ▪ Reading measured values	Defining the operating language
Operation			▪ Configuring the operational display (e.g. display format, display contrast) ▪ Resetting and controlling totalizers
Setup		**"Maintenance" role** Commissioning: ▪ Configuration of the measurement ▪ Configuration of the inputs and outputs	Wizards for fast commissioning: ▪ Setting the input ▪ Configuring the outputs ▪ Configuring the operational display ▪ Defining the output conditioning ▪ Configuring the low flow cut off ▪ Configuring the empty pipe detection **"Advanced setup" submenu:** ▪ For more customized configuration of the measurement (adaptation to special measuring conditions) ▪ Configuration of totalizers ▪ Configuration of electrode cleaning (optional) ▪ Administration (define access code, reset measuring device)
Diagnostics		**"Maintenance" role** Fault elimination: ▪ Diagnostics and elimination of process and device errors ▪ Measured value simulation	Contains all parameters for error detection and analyzing process and device errors: ▪ **"Diagnostic list" submenu** Contains up to 5 currently pending diagnostic messages. ▪ **"Event logbook" submenu** Contains up to 20 or 100 (order option " Extended HistoROM") event messages that have occurred. ▪ **"Device information" submenu** Contains information for identifying the device. ▪ **"Measured values" submenu** Contains all current measured values. ▪ **"Heartbeat Technology" submenu** The functionality of the device is checked on demand and the verification results are documented. ▪ **"Simulation" submenu** Is used to simulate measured values or output values.
Expert	function-oriented	Tasks that require detailed knowledge of the function of the device: ▪ Commissioning measurements under difficult conditions ▪ Optimal adaptation of the measurement to difficult conditions ▪ Detailed configuration of the communication interface ▪ Error diagnostics in difficult cases	Contains all the parameters of the device and makes it possible to access these parameters directly using an access code. The structure of this menu is based on the function blocks of the device: ▪ **"System" submenu** Contains all higher-order device parameters that do not pertain either to measurement or the measured value communication. ▪ **"Sensor" submenu** Configuration of the measurement. ▪ **"Input" submenu (order option)** Configuring the status input. ▪ **"Output" submenu** Configuring of the analog current outputs as well as the pulse/frequency and switch output. ▪ **"Communication" submenu** Configuration of the digital communication interface and the Web server. ▪ **"Application" submenu** Configuration of the functions that go beyond the actual measurement (e.g. totalizer). ▪ **"Diagnostics" submenu** Error detection and analysis of process and device errors and for device simulation and Heartbeat Technology.

8.3 Access to the operating menu via the local display

8.3.1 Operational display

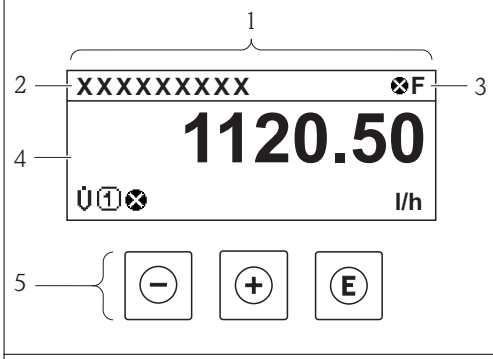

1 *Operational display*
2 *Device tag (→ 79)*
3 *Status area*
4 *Display area for measured values (4-line)*
5 *Operating elements (→ 55)*

Status area

The following symbols appear in the status area of the operational display at the top right:
- Status signals(→ 104)
  - **F**: Failure
  - **C**: Function check
  - **S**: Out of specification
  - **M**: Maintenance required
- Diagnostic behavior(→ 105)
  - : Alarm
  - : Warning
- : Locking (the device is locked via the hardware (→ 94))
- : Communication (communication via remote operation is active)

Display area

In the display area, each measured value is prefaced by certain symbol types for further description:

Measured variables

Symbol	Meaning
	Volume flow
	Conductivity
	Mass flow
	Totalizer The measurement channel number indicates which of the three totalizers is displayed.
	Status input

Measurement channel numbers

Symbol	Meaning
1 ... 4	Measurement channel 1 to 4
The measurement channel number is displayed only if more than one channel is present for the same measured variable type (e.g. Totalizer 1 to 3).	

Diagnostic behavior

The diagnostic behavior pertains to a diagnostic event that is relevant to the displayed measured variable. For information on the symbols (→ 105)

The number and display format of the measured values can be configured via the **"Format display" parameter**(→ 80). "Operation" menu → Display → Format display

8.3.2 Navigation view

In the submenu	In the wizard
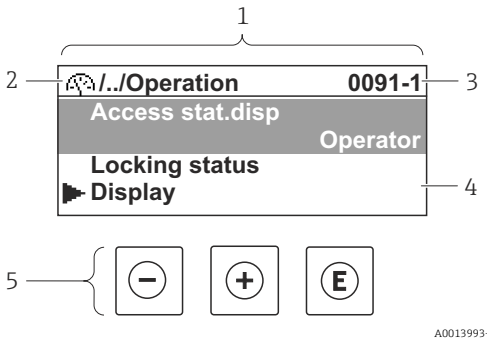	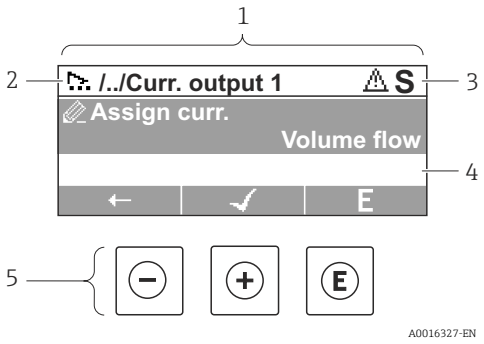

1 Navigation view
2 Navigation path to current position
3 Status area
4 Display area for navigation
5 Operating elements (→ 55)

Navigation path

The navigation path - displayed at the top left in the navigation view - consists of the following elements:

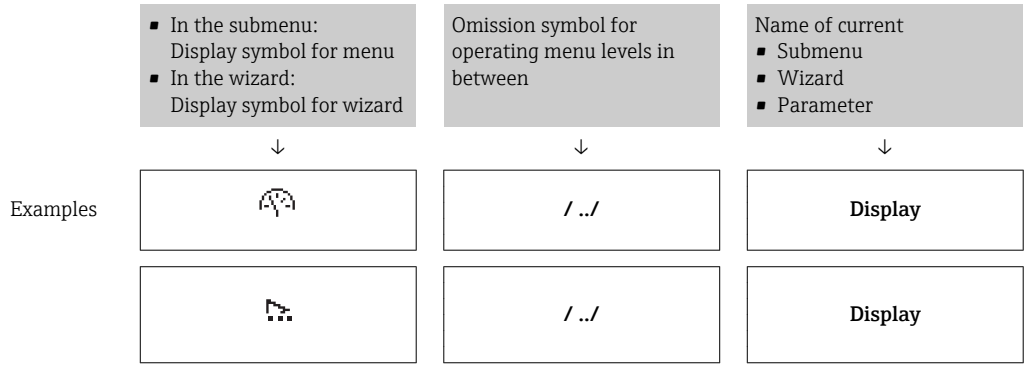

For more information about the menu icons, refer to the "Display area" section (→ 53)

Status area

The following appears in the status area of the navigation view in the top right corner:
- Of the submenu
  - The direct access code for the parameter you are navigating to (e.g. 0022-1)
  - If a diagnostic event is present, the diagnostic behavior and status signal
- In the wizard
  If a diagnostic event is present, the diagnostic behavior and status signal

- For information on the diagnostic behavior and status signal (→ 104)
- For information on the function and entry of the direct access code (→ 58)

Display area

Menus

Symbol	Meaning
	Operation Appears: ▪ In the menu next to the "Operation" selection ▪ At the left in the navigation path in the "Operation" menu
	Setup Appears: ▪ In the menu next to the "Setup" selection ▪ At the left in the navigation path in the "Setup" menu
	Diagnostics Appears: ▪ In the menu next to the "Diagnostics" selection ▪ At the left in the navigation path in the "Diagnostics" menu
	Expert Appears: ▪ In the menu next to the "Expert" selection ▪ At the left in the navigation path in the "Expert" menu

Submenus, wizards, parameters

Symbol	Meaning
	Submenu
	Wizard
	Parameters within a wizard No display symbol exists for parameters in submenus.

Locking

Symbol	Meaning
	Parameter locked When displayed in front of a parameter name, indicates that the parameter is locked. ▪ By a user-specific access code (→ 93) ▪ By the hardware write protection switch (→ 94)

Wizard operation

Symbol	Meaning
	Switches to the previous parameter.
	Confirms the parameter value and switches to the next parameter.
E	Opens the editing view of the parameter.

8.3.3 Editing view

Numeric editor	Text editor
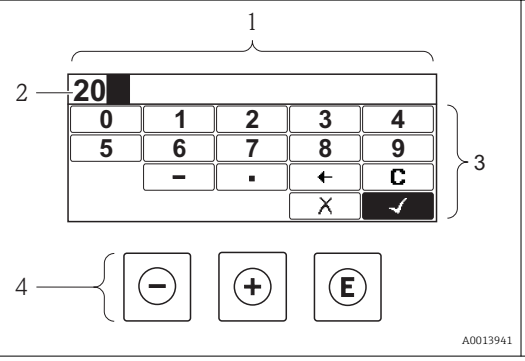	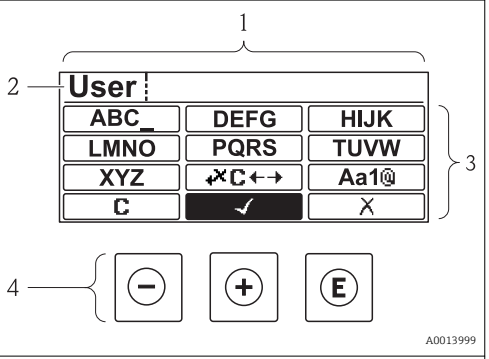

1 Editing view
2 Display area of the entered values
3 Input mask
4 Operating elements (→ 55)

Input mask

The following input symbols are available in the input mask of the numeric and text editor:

Numeric editor

Symbol	Meaning
0 … 9	Selection of numbers from 0 to 9.
.	Inserts decimal separator at the input position.
–	Inserts minus sign at the input position.
✓	Confirms selection.
←	Moves the input position one position to the left.
✗	Exits the input without applying the changes.
C	Clears all entered characters.

Text editor

Symbol	Meaning
Aa1@	Toggle ▪ Between upper-case and lower-case letters ▪ For entering numbers ▪ For entering special characters
ABC_ … XYZ	Selection of letters from A to Z.

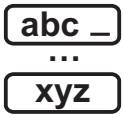	Selection of letters from a to z.
	Selection of special characters.
	Confirms selection.
	Switches to the selection of the correction tools.
	Exits the input without applying the changes.
	Clears all entered characters.

Correction symbols under

Symbol	Meaning
	Clears all entered characters.
	Moves the input position one position to the right.
	Moves the input position one position to the left.
	Deletes one character immediately to the left of the input position.

8.3.4 Operating elements

Key	Meaning
	Minus key *In a menu, submenu* Moves the selection bar upwards in a choose list. *With a Wizard* Confirms the parameter value and goes to the previous parameter. *With a text and numeric editor* In the input mask, moves the selection bar to the left (backwards).
	Plus key *In a menu, submenu* Moves the selection bar downwards in a choose list. *With a Wizard* Confirms the parameter value and goes to the next parameter. *With a text and numeric editor* Moves the selection bar to the right (forwards) in an input screen.

Key	Meaning
E	**Enter key** *For operational display* ▪ Pressing the key briefly opens the operating menu. ▪ Pressing the key for 2 s opens the context menu. *In a menu, submenu* ▪ Pressing the key briefly: – Opens the selected menu, submenu or parameter. – Starts the wizard. – If help text is open, closes the help text of the parameter. ▪ Pressing the key for 2 s for parameter: If present, opens the help text for the function of the parameter. *With a Wizard* Opens the editing view of the parameter. *With a text and numeric editor* ▪ Pressing the key briefly: – Opens the selected group. – Carries out the selected action. ▪ Pressing the key for 2 s confirms the edited parameter value.
− + +	**Escape key combination (press keys simultaneously)** *In a menu, submenu* ▪ Pressing the key briefly: – Exits the current menu level and takes you to the next higher level. – If help text is open, closes the help text of the parameter. ▪ Pressing the key for 2 s returns you to the operational display ("home position"). *With a Wizard* Exits the wizard and takes you to the next higher level. *With a text and numeric editor* Closes the text or numeric editor without applying changes.
− + E	**Minus/Enter key combination (press the keys simultaneously)** Reduces the contrast (brighter setting).
+ + E	**Plus/Enter key combination (press and hold down the keys simultaneously)** Increases the contrast (darker setting).
− + + + E	**Minus/Plus/Enter key combination (press the keys simultaneously)** *For operational display* Enables or disables the keypad lock (only SD02 display module).

8.3.5 Opening the context menu

Using the context menu, the user can call up the following menus quickly and directly from the operational display:

- Setup
- Simulation

Calling up and closing the context menu

The user is in the operational display.

1. Press E for 2 s.
   ↳ The context menu opens.

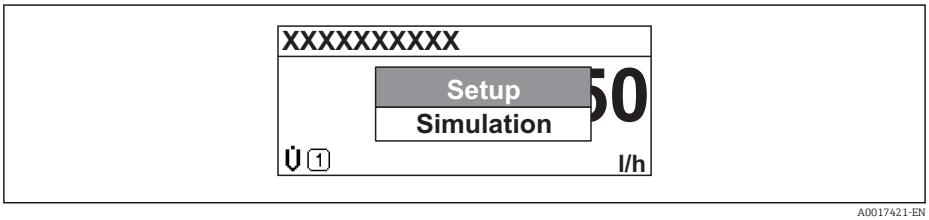

A0017421-EN

2. Press − + + simultaneously.

↳ The context menu is closed and the operational display appears.

Calling up the menu via the context menu

1. Open the context menu.
2. Press ⊞ to navigate to the desired menu.
3. Press Ⓔ to confirm the selection.
   ↳ The selected menu opens.

8.3.6 Navigating and selecting from list

Different operating elements are used to navigate through the operating menu. The navigation path is displayed on the left in the header. Icons are displayed in front of the individual menus. These icons are also shown in the header during navigation.

For an explanation of the navigation view with symbols and operating elements (→ 52)

Example: Setting the number of displayed measured values to "2 values"

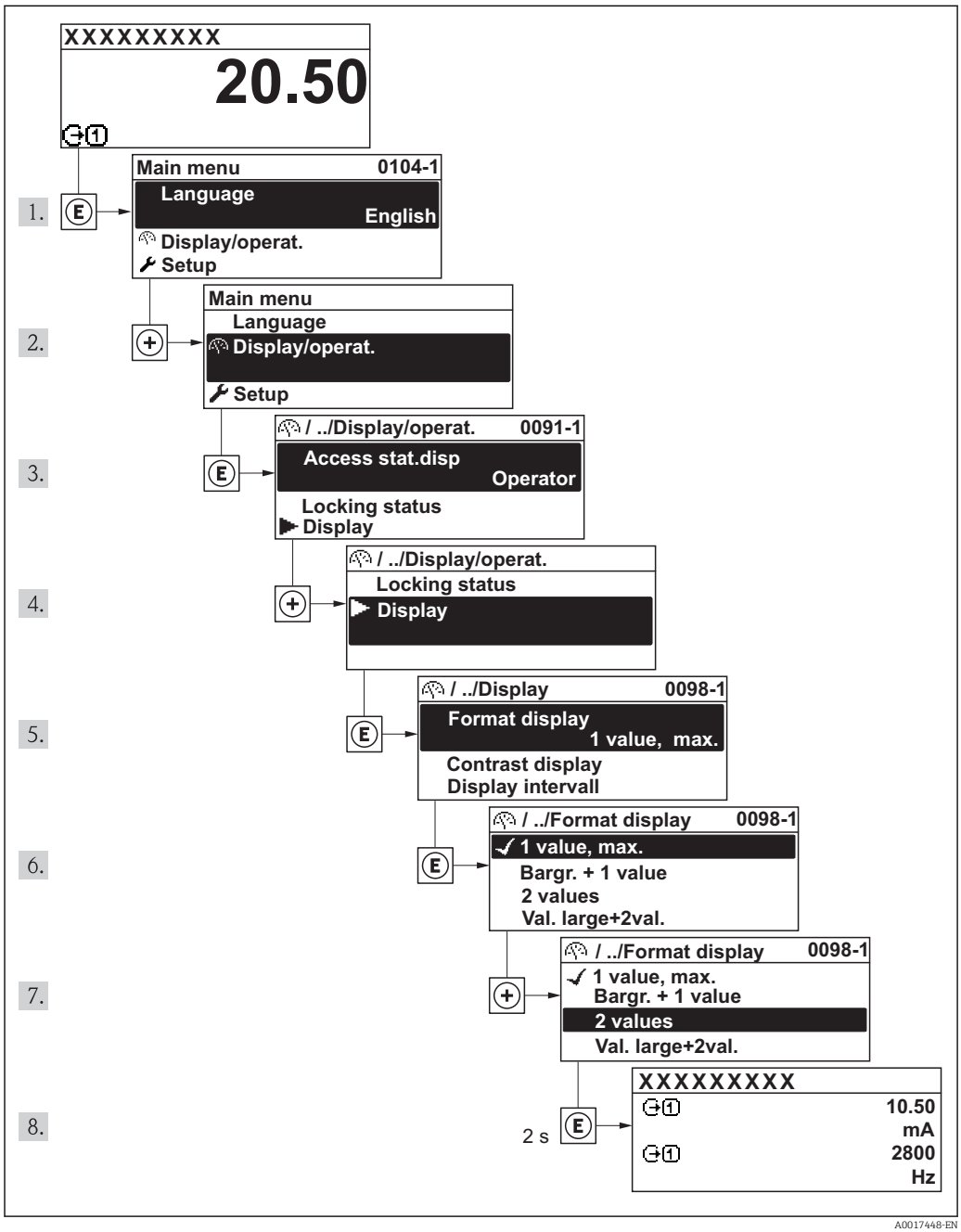

8.3.7 Calling the parameter directly

A parameter number is assigned to every parameter to be able to access a parameter directly via the onsite display. Entering this access code in the **Direct access** parameter calls up the desired parameter directly.

Navigation path
"Expert" menu → Direct access

The direct access code consists of a 4-digit number and the channel number, which identifies the channel of a process variable: e.g. 0914-1. In the navigation view, this appears on the right-hand side in the header of the selected parameter.

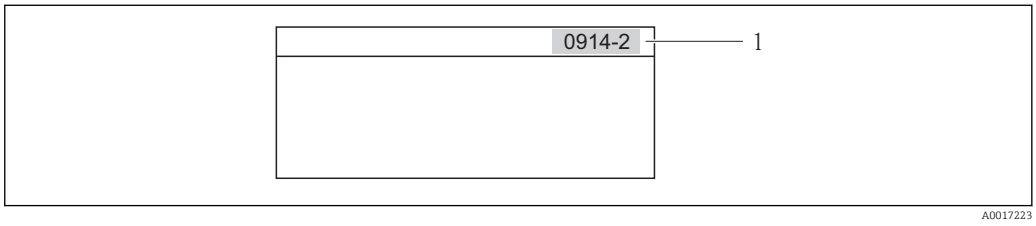

1 Direct access code

Note the following when entering the direct access code:
- The leading zeros in the direct access code do not have to be entered.
  Example: Input of "914" instead of "0914"
- If no channel number is entered, channel 1 is jumped to automatically.
  Example: Input of "0914" → Parameter **Totalizer 1**
- If a different channel is jumped to: Enter the direct access code with the corresponding channel number.
  Example: Input of "0914-2" → Parameter **Totalizer 2**

For the direct access codes of the individual parameters

8.3.8 Calling up help text

For some parameters, help texts exist, which the user can call up from the navigation view. These briefly describe the function of the parameter and thus support fast and reliable commissioning.

Calling up and closing the help text

The user is in the navigation view and the selection bar is on a parameter.

1. Press E for 2 s.
   ↳ The help text for the selected parameter opens.

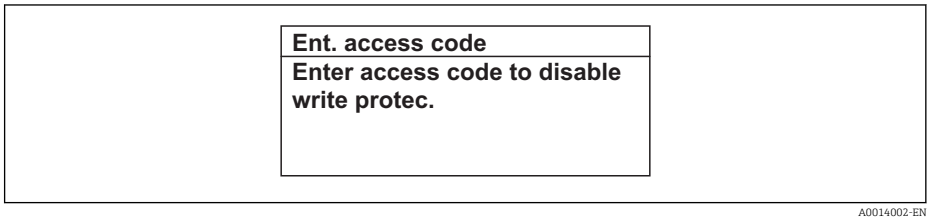

23 Example: Help text for parameter "Enter access code"

2. Press − + + simultaneously.
   ↳ The help text is closed.

8.3.9 Changing the parameters

For a description of the editing display - consisting of text editor and numeric editor - with symbols (→ 54), for a description of the operating elements (→ 55)

Example: Changing the tag name in the "Tag description" parameter from 001-FT-101 to 001-FT-102

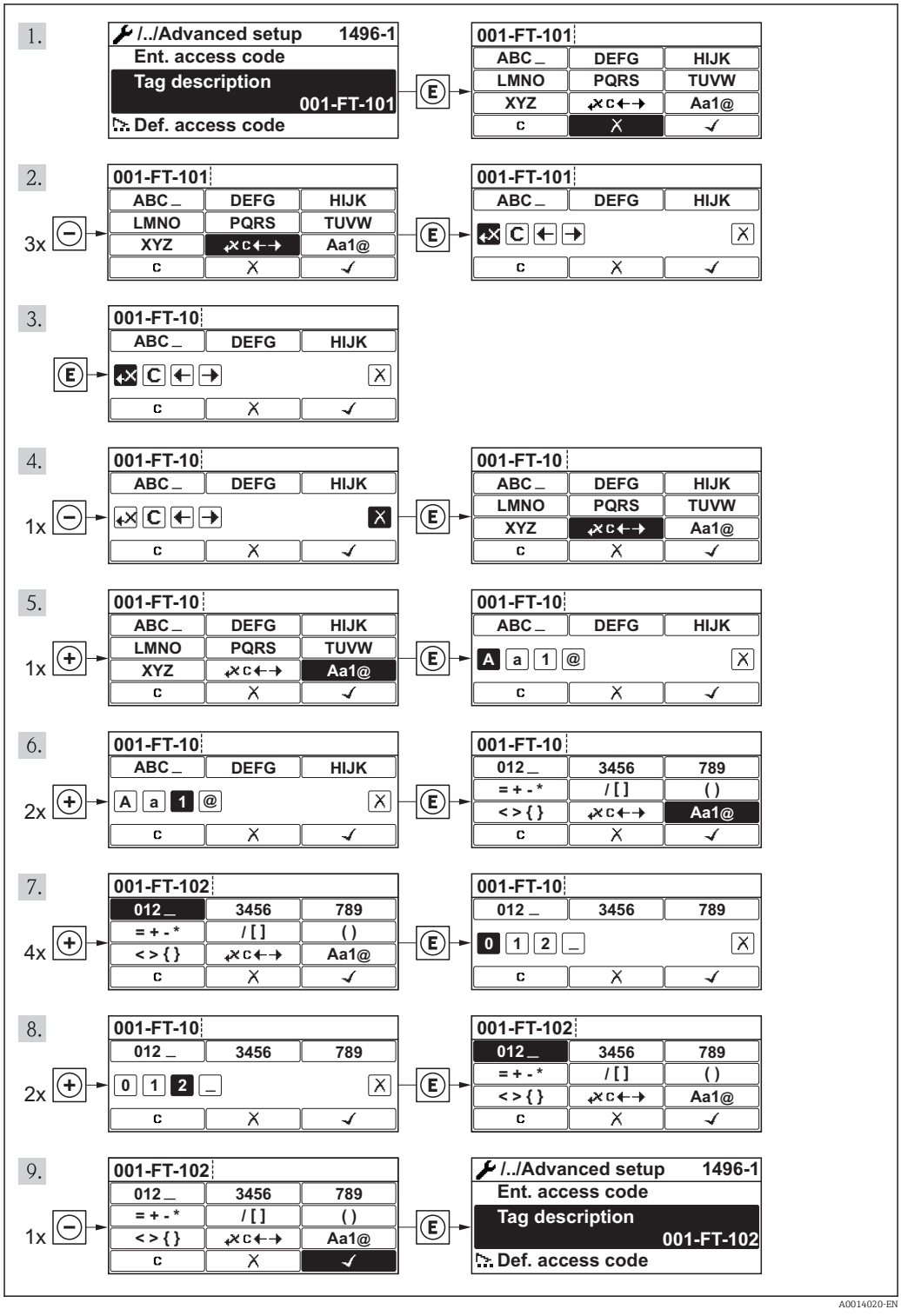

A message is displayed if the value entered is outside the permitted value range.

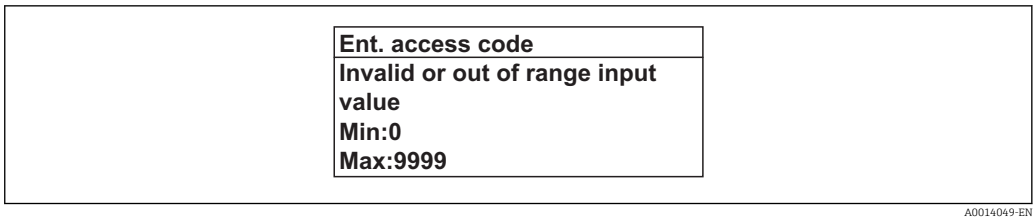

A0014049-EN

8.3.10 User roles and related access authorization

The two user roles "Operator" and "Maintenance" have different write access to the parameters if the customer defines a user-specific access code. This protects the device configuration via the local display from unauthorized access (→ 93).

Access authorization to parameters

User role	Read access		Write access	
	Without access code (from the factory)	With access code	Without access code (from the factory)	With access code
Operator	✔	✔	✔	-- [1]
Maintenance	✔	✔	✔	✔

1) Despite the defined access code, certain parameters can always be modified and thus are excepted from the write protection, as they do not affect the measurement. Refer to the "Write protection via access code" section

If an incorrect access code is entered, the user obtains the access rights of the "Operator" role.

The user role with which the user is currently logged on is indicated by the **Access status display** parameter. Navigation path: Operation → Access status display

8.3.11 Disabling write protection via access code

If the -symbol appears on the local display in front of a parameter, the parameter is write-protected by a user-specific access code and its value cannot be changed at the moment using the local display (→ 93).

The locking of the write access via local operation can be disabled by entering the customer-defined access code via the respective access option.

1. After you press E, the input prompt for the access code appears.
2. Enter the access code.
   ↳ The -symbol in front of the parameters disappears; all previously write-protected parameters are now re-enabled.

8.3.12 Enabling and disabling the keypad lock

The keypad lock makes it possible to block access to the entire operating menu via local operation. As a result, it is no longer possible to navigate through the operating menu or change the values of individual parameters. Users can only read the measured values on the operational display.

Local operation with touch control

The keypad lock is switched on and off via the context menu.

Switching on the keypad lock

The keypad lock is switched on automatically:
- Each time the device is restarted.
- If the device has not been operated for longer than one minute in the measured value display.

1. The device is in the measured value display.
   Press the E key for longer than 2 seconds.
   ↳ A context menu appears.
2. In the context menu, select the **Keylock on** option.
   ↳ The keypad lock is switched on.

If the user attempts to access the operating menu while the keypad lock is active, the message **Keylock on** appears.

Switching off the keypad lock

1. The keypad lock is switched on.
   Press the E key for longer than 2 seconds.
   ↳ A context menu appears.
2. In the context menu, select the **Keylock off** option.
   ↳ The keypad lock is switched off.

8.4 Access to the operating menu via the Web browser

8.4.1 Function range

Thanks to the integrated Web server the device can be operated and configured via a Web browser. The operating menu structure is the same as in the local display. In addition to the measured values, status information on the device is also displayed and allows the user to monitor the status of the device. Furthermore the device data can be managed and the network parameters can be configured.

8.4.2 Prerequisites

Hardware

Connecting cable	Standard Ethernet cable with RJ45 connector
Computer	RJ45 interface
Measuring device:	Web server must be enabled; factory setting: ON For information on enabling the Web server (→ 65)

Software of the computer

Web browsers supported	▪ Microsoft Internet Explorer (min. 8.x) ▪ Mozilla Firefox ▪ Google chrome
Recommended operating systems	▪ Windows XP ▪ Windows 7

User rights for TCP/IP settings	User rights required for TCP/IP settings (e.g. for changes to IP address, subnet mask)
Computer configuration	▪ JavaScript is enabled ▪ If JavaScript cannot be enabled, enter http://192.168.1.212/basic.html in the address line of the Web browser. A fully functional but simplified version of the operating menu structure starts in the Web browser.

When installing a new firmware version:
To enable correct data display, clear the temporary memory (cache) of the Web browser under **Internet options**.

8.4.3 Establishing a connection

Configuring the Internet protocol of the computer

IP address	192.168.1.XXX; for XXX all numerical values except: 0, 212 and 255 → e.g. 192.168.1.213
Subnet mask	255.255.255.0
Default gateway	192.168.1.212 or leave cells empty

1. Switch on the measuring device and connect to the computer via the cable (→ 66).
2. If a 2nd network card is not used: all the applications on the notebook should be closed, or all the applications that require the Internet or network, such as e-mail, SAP applications, Internet or Windows Explorer, i.e. close all open Internet browsers.
3. Configure the properties of the Internet protocol (TCP/IP) as defined in the table above.

Starting the Web browser

1. Start the Web browser on the computer.
2. Enter the IP address of the Web server in the address line of the Web browser: 192.168.1.212

The login page appears.

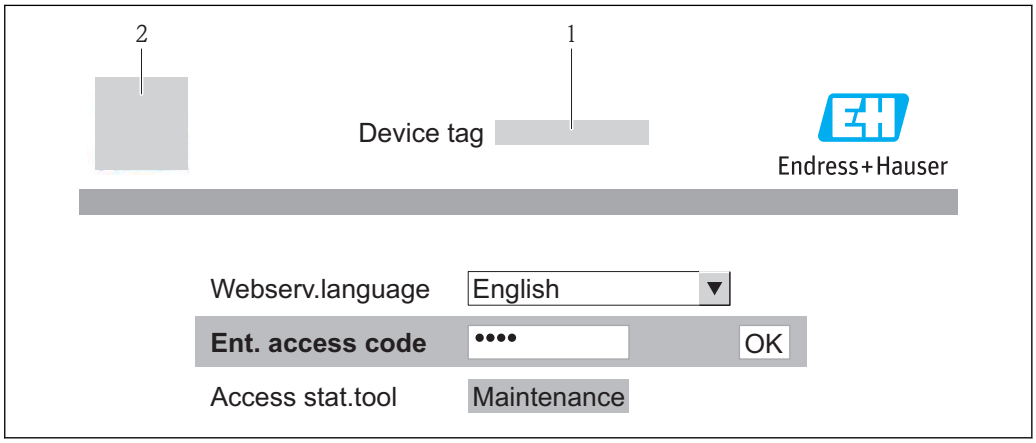

1 Device tag (→ 79)
2 Picture of device

If a login page does not appear, or if the page is incomplete (→ 102)

8.4.4 Logging on

1. Select the preferred operating language for the Web browser.
2. Enter the access code.
3. Press **OK** to confirm your entry.

Access code	0000 (factory setting); can be changed by customer (→ 🖹 93)

If no action is performed for 10 minutes, the Web browser automatically returns to the login page.

8.4.5 User interface

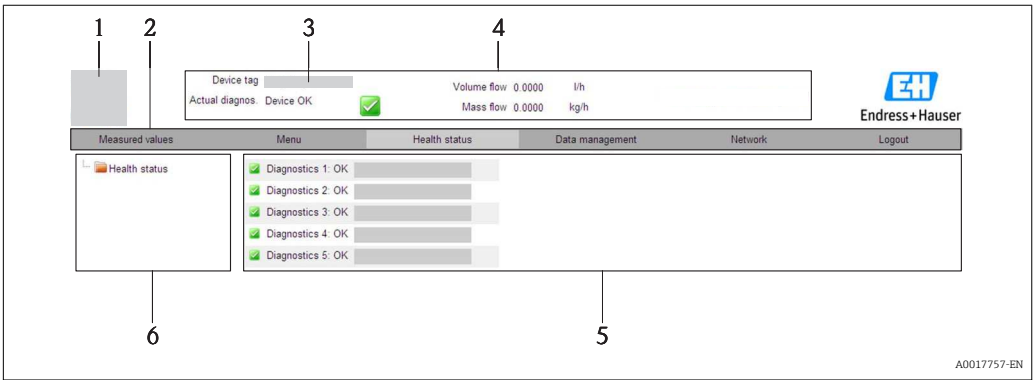

1 *Picture of device*
2 *Function row with 6 functions*
3 *Device tag*
4 *Header*
5 *Working area*
6 *Navigation area*

Header

The following information appears in the header:
- Device tag (→ 🖹 79)
- Device status with status signal (→ 🖹 106)
- Current measured values (→ 🖹 96)

Function row

Functions	Meaning
Measured values	The measured values of the device are displayed
Menu	Access to the operating menu structure of the device, same as for the local display and operating tool
Device status	Displays the diagnostic messages currently pending, listed in order of priority
Data management	▪ Data exchange between PC and measuring device: – Upload the configuration from the device (XML format, create configuration back-up) – Save the configuration to the device (XML format, restore configuration) – Export the event list (.csv file) – Export parameter settings (.csv file, create documentation of the measuring point configuration) – Export the Heartbeat verification log (PDF file, only available with the "Heartbeat Verification" application package) ▪ Upload the device driver for system integration from the device

Functions	Meaning
Network configuration	Configuration and checking of all the parameters required for establishing the connection to the device: ▪ Network settings (e.g. IP address, MAC address) ▪ Device information (e.g. serial number, firmware version)
Logout	End the operation and call up the login page

Navigation area

If a function is selected in the function bar, the submenus of the function open in the navigation area. The user can now navigate through the menu structure.

Working area

Depending on the selected function and the related submenus, various actions can be performed in this area:
- Configuring parameters
- Reading measured values
- Calling up help text
- Starting an upload/download

8.4.6 Disabling the Web server

The Web server for the measuring device can enabled and disabled as required via the **Web server functionality** parameter.

Navigation

"Expert" menu → Communication → Web server

Parameter overview with brief description

Parameter	Description	Selection	Factory setting
Web server functionality	Switch the Web server on and off.	▪ Off ▪ On	On

Enabling the Web server

If the Web server is disabled it can only be re-enabled with the **Web server functionality** parameter via the following operating options:
- Via local display
- Via "FieldCare" operating tool

8.4.7 Logging out

Before logging out, perform a data backup via the **Data management** function (upload configuration from device) if necessary.

1. Select the **Logout** entry in the function row.
   ↳ The home page with the Login box appears.
2. Close the Web browser.
3. Reset the modified properties of the Internet protocol (TCP/IP) if they are no longer needed (→ 63).

8.5 Access to the operating menu via the operating tool

The structure of the operating menu in the operating tools is the same as for operation via the local display.

8.5.1 Connecting the operating tool

Via PROFIBUS DP network

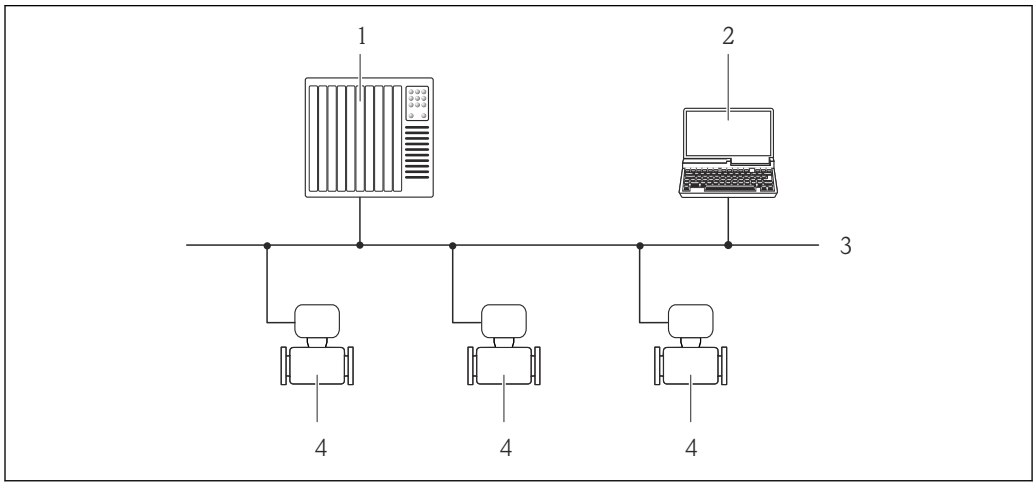

1 Automation system
2 Computer with PROFIBUS network card
3 PROFIBUS DP network
4 Measuring device

Via service interface (CDI-RJ45)

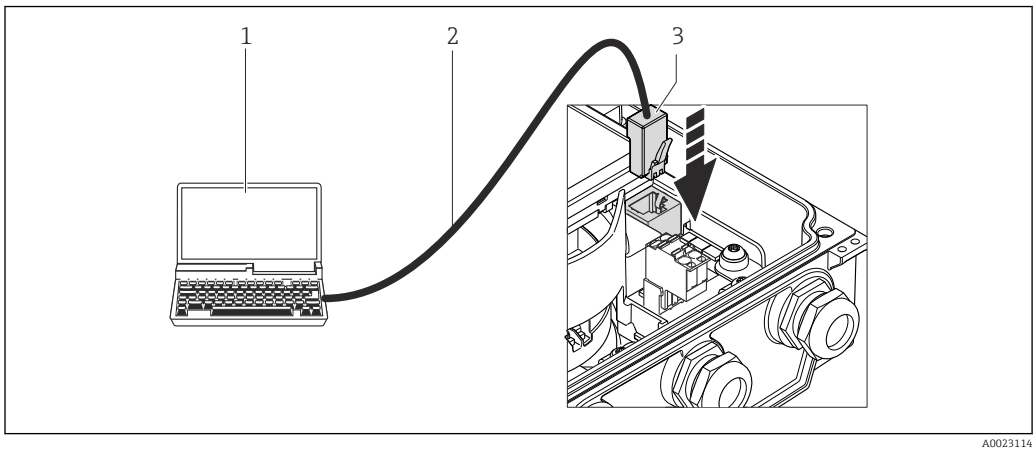

1 Computer with Web browser (e.g. Internet Explorer) for accessing the integrated device Web server or with "FieldCare" operating tool with COM DTM "CDI Communication TCP/IP"
2 Standard Ethernet connecting cable with RJ45 plug
3 Service interface (CDI -RJ45) of the measuring device with access to the integrated Web server

8.5.2 FieldCare

Function scope

FDT-based plant asset management tool from Endress+Hauser. It can configure all smart field devices in a system and helps you manage them. By using the status information, it is also a simple but effective way of checking their status and condition.

Access takes place via:

Typical functions:
- Configuring parameters of transmitters
- Loading and saving device data (upload/download)
- Documentation of the measuring point
- Visualization of the measured value memory (line recorder) and event logbook

For details, see Operating Instructions BA00027S and BA00059S

Source for device description files

See data (→ 69)

Establishing a connection

Via service interface (CDI-RJ45)

1. Start FieldCare and launch the project.
2. In the network: Add a device.
   ↳ The **Add device** window opens.
3. Select the **CDI Communication TCP/IP** option from the list and press **OK** to confirm.
4. Right-click **CDI Communication TCP/IP** and select the **Add device** option in the context menu that opens.
5. Select the desired device from the list and press **OK** to confirm.
   ↳ The **CDI Communication TCP/IP (Configuration)** window opens.
6. Enter the device address in the **IP address** field: 192.168.1.212 and press **Enter** to confirm.
7. Establish the online connection to the device.

For details, see Operating Instructions BA00027S and BA00059S

User interface

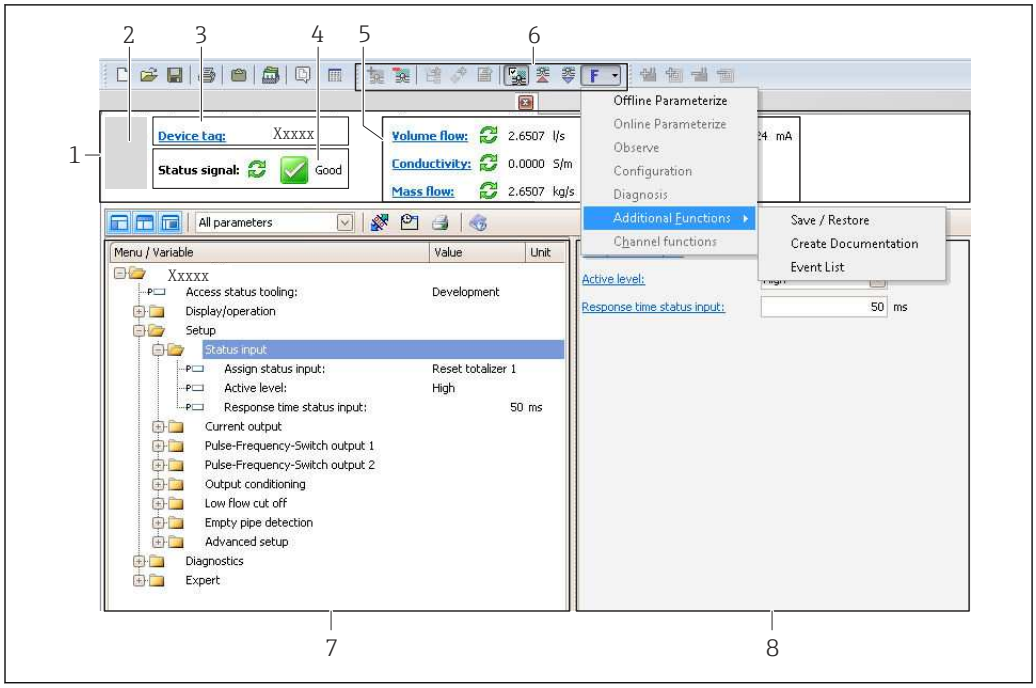

1 *Header*
2 *Picture of device*
3 *Device tag (→ 🖹 79)*
4 *Status area with status signal (→ 🖹 106)*
6 *Display area for current measured values (→ 🖹 96)*
5 *Event list with additional functions such as save/load, events list and document creation*
7 *Navigation area with operating menu structure*
8 *Operating range*

9 System integration

9.1 Overview of device description files

9.1.1 Current version data for the device

Firmware version	01.00.zz	▪ On the title page of the Operating instructions ▪ On transmitter nameplate (→ 🖹 14) ▪ Parameter **firmware version** Diagnostics → Device info→ Firmware version
Release date of firmware version	05.2014	---
Manufacturer ID	0x11	**Manufacturer ID** parameter Diagnostics → Device info→ Manufacturer ID
Device type ID	0x1562	**Device type** parameter Diagnostics → Device info → Device type
Profile version	3.02	---

9.1.2 Operating tools

The suitable device description file for the individual operating tools is listed in the table below, along with information on where the file can be acquired.

The suitable device description file for the operating tool is listed in the table below, along with information on where the file can be acquired.

Operating tool via PROFIBUS protocol	Sources for obtaining device descriptions
FieldCare	▪ www.endress.com → Download Area ▪ CD–ROM (contact Endress+Hauser) ▪ DVD (contact Endress+Hauser)

9.2 Device master file (GSD)

In order to integrate field devices into a bus system, the PROFIBUS system needs a description of the device parameters, such as output data, input data, data format, data volume and supported transmission rate.

These data are available in the device master file (GSD) which is provided to the PROFIBUS Master when the communication system is commissioned. In addition device bit maps, which appear as icons in the network structure, can also be integrated.

With the Profile 3.0 device master file (GSD) it is possible to exchange field devices made by different manufacturers without having to reconfigure.

Generally speaking two different GSD versions are possible with Profile 3.0 and higher.

- Before configuring, the user must decide which GSD should be used to operate the system.
- The setting can be changed via a Class 2 master.

9.2.1 Manufacturer-specific GSD

This GSD guarantees the unrestricted functionality of the measuring device. Device-specific process parameters and functions are therefore available.

Manufacturer-specific GSD	ID number	File name
PROFIBUS DP	0x1562	EH3x1562.gsd

The fact that the manufacturer-specific GSD should be used is specified in the **Ident number selector** parameter by selecting the **Manufacturer** option.

Where to acquire the manufacturer-specific GSD:
www.endress.com → Download Area

9.2.2 Profile GSD

Differs in terms of the number of Analog Input blocks (AI) and the measured values. If a system is configured with a Profile GSD, it is possible to exchange devices made by different manufacturers. However, it is essential to ensure that the order of the cyclic process values is correct.

ID number	Supported blocks	Supported channels
0x9740	▪ 1 Analog Input ▪ 1 Totalizer	▪ Channel Analog Input: volume flow ▪ Channel totalizer: volume flow
0x9741	▪ 2 Analog Input ▪ 1 Totalizer	▪ Channel Analog Input 1: volume flow ▪ Channel Analog Input 2: mass flow ▪ Channel totalizer: volume flow
0x9742	▪ 3 Analog Input ▪ 1 Totalizer	▪ Channel Analog Input 1: volume flow ▪ Channel Analog Input 2: mass flow ▪ Channel Analog Input 3: corrected volume flow ▪ Channel totalizer: volume flow

The Profile GSD that is to be used is specified in the **Ident number selector** parameter by selecting the **Profile 0x9740** option, **Profile 0x9741** option or **Profile 0x9742** option.

9.2.3 Compatibility with other Endress+Hauser measuring devices

The Promag 400 PROFIBUS DP guarantees compatibility during cyclic data exchange with the automation system (Class 1 master) for the following measuring devices:
- Promag 50 PROFIBUS DP (Profile version 3.0, ID number 0x1546)
- Promag 53 PROFIBUS DP (Profile version 3.0, ID number 0x1526)

It is possible to replace these measuring devices with a Promag 400 PROFIBUS DP without the need to reconfigure the PROFIBUS network in the automation unit even though the names and ID numbers of the measuring devices differ. Once replaced, the device is either identified automatically (factory setting) or device identification can be set manually.

Automatic identification (factory setting)

The Promag 400 PROFIBUS DP automatically identifies the measuring device configured in the automation system (Promag 50 PROFIBUS DP or Promag 53 PROFIBUS DP) and makes the same input and output data and measured value status information available for cyclic data exchange.

Automatic identification is set in the **Ident number selector** parameter using the **Auto** option (factory setting).

Manual setting

The manual setting is made in the **Ident number selector** parameter using the Promag 50 (0x1546) or Promag 53 (0x1526) option.

Afterwards, the Promag 400 PROFIBUS DP makes the same input and output data and measured status information available for cyclic data exchange.

- If the Promag 400 PROFIBUS DP is acyclically configured via an operating program (Class 2 master), access is directly via the block structure or the parameters of the measuring device.
- If parameters have been changed in the device to be replaced (Promag 50 PROFIBUS DP or Promag 53 PROFIBUS DP) (parameter setting no longer corresponds to the original factory setting), these parameters must be changed accordingly in the new replacement Promag 400 PROFIBUS DP via an operating program (Class 2 master).
  Example
  The setting for low flow cut off has been changed from mass flow (factory setting) to corrected volume flow in a Promag 50 PROFIBUS DP currently in operation. This device is now replaced by a Promag 400 PROFIBUS DP device. After replacing the device, the assignment for the low flow cut off must be changed manually in the Promag 400 PROFIBUS DP, i.e. to corrected volume flow, to ensure the measuring device behaves identically.

Replacing the measuring devices without changing the GSD file or restarting the controller

In the procedure described below, the device can be replaced without interrupting ongoing operation or restarting the controller. However with this procedure the measuring device is not fully integrated!

1. Replace the measuring device Promag 50 PROFIBUS DP or Promag 53 PROFIBUS DP by the Promag 400 PROFIBUS DP.
2. Set the device address: The same device address that was set for the Promag 50, Promag 53 or PROFIBUS DP Profile GSD must be used.
3. Connect the Promag 400 PROFIBUS DP.

If the factory setting had been changed on the replaced device (Promag 50 or Promag 53), the following settings may need to be changed:

1. Configuration of the application-specific parameters.
2. Choice of process variables to be transmitted via the CHANNEL parameter in the Analog Input or Totalizer function block.
3. Setting of the units for the process variables.

9.3 Cyclic data transmission

Cyclic data transmission when using the device master file (GSD).

9.3.1 Block model

The block model shows which input and output data the measuring device makes available for cyclic data exchange. Cyclic data exchange takes place with a PROFIBUS master (Class 1), e.g. a control system etc.

Measuring device					Control system
Transducer Block	Analog Input block 1 to 4	(→ 72)	Output value AI	→	PROFIBUS DP
	Totalizer block 1 to 3	(→ 73)	Output value TOTAL	→	
			Controller SETTOT	←	
			Configuration MODETOT	←	
	Analog Output block 1	(→ 75)	Input values AO	←	
	Discrete Input block 1 to 2	(→ 75)	Output values DI	→	

	Discrete Output block 1 to 2	(→ 76)	Input values DO	←

Defined order of modules

The measuring device works as a modular PROFIBUS slave. In contrast to a compact slave, a modular slave has a variable design and consists of several individual modules. The device master file (GSD) contains a description of the individual modules (input and output data) along with their individual properties.

The modules are permanently assigned to the slots, i.e. when configuring the modules, the order and the arrangement of the modules must be respected.

Slot	Module	Function block
1…4	AI	Analog Input block 1 to 4
5	TOTAL or SETTOT_TOTAL or SETOT_MODETOT_TOTAL	Totalizer block 1
6		Totalizer block 2
7		Totalizer block 3
8	AO	Analog Output block 1
9…10	DI	Discrete Input block 1 to 2
11…12	DO	Discrete Output block 1 to 2

To optimize the data throughput rate of the PROFIBUS network, it is advisable to only configure modules that are processed in the PROFIBUS master system. Any resulting gaps between the configured modules must be assigned to the EMPTY_MODULE.

9.3.2 Description of the modules

The data structure is described from the perspective of the PROFIBUS master:
- Input data: Are sent from the measuring device to the PROFIBUS master.
- Output data: Are sent from the PROFIBUS master to the measuring device.

AI module (Analog Input)

Transmit an input variable from the measuring device to the PROFIBUS master (Class 1).

The selected input variable, along with the status, is cyclically transmitted to the PROFIBUS master (Class 1) via the AI module. The input variable is depicted in the first four bytes in the form of a floating point number as per the IEEE 754 standard. The fifth byte contains standardized status information pertaining to the input variable.

Four Analog Input blocks are available (slot 1 to 4).

Selection: input variable

The input variable can be specified using the CHANNEL parameter.

CHANNEL	Input variable
33122	Volume flow
32961	Mass flow
708	Flow velocity
1132	Conductivity
1042	Electronics temperature

Factory setting

Function block	Factory setting
AI 1	Volume flow
AI 2	Mass flow
AI 3	Electronics temperature
AI 4	Flow velocity

Data structure

Input data of Analog Input

Byte 1	Byte 2	Byte 3	Byte 4	Byte 5
Measured value: floating point number (IEEE 754)				Status

TOTAL module

Transmit a totalizer value from the measuring device to the PROFIBUS master (Class 1).

Via the TOTAL module, a selected totalizer value along with the status is cyclically transmitted to a PROFIBUS master (Class 1). The totalizer value is depicted in the first four bytes in the form of a floating point number as per the IEEE 754 standard. The fifth byte contains standardized status information pertaining to the totalizer value.

Three totalizer blocks are available (slot 5 to 7).

Selection: totalizer value

The totalizer value can be specified using the CHANNEL parameter.

CHANNEL	Input variable
33122	Volume flow
32961	Mass flow

Factory setting

Function block	Factory setting: TOTAL
Totalizer 1, 2 and 3	Volume flow

Data structure

Input data of TOTAL

Byte 1	Byte 2	Byte 3	Byte 4	Byte 5
Measured value: floating point number (IEEE 754)				Status

SETTOT_TOTAL module

The module combination consists of the SETTOT and TOTAL functions:
- SETTOT: Control the totalizers via the PROFIBUS master.
- TOTAL: Transmit the totalizer value along with the status to the PROFIBUS master.

Three totalizer blocks are available (slot 5 to 7).

Selection: control totalizer

CHANNEL	Value SETTOT	Control totalizer
33310	0	Totalize
33046	1	Resetting
33308	2	Adopt totalizer initial setting

Factory setting

Function block	Factory setting: Value SETTOT (meaning)
Totalizer 1, 2 and 3	0 (totalizing)

Data structure

Output data of SETTOT

Byte 1
Control variable 1

Input data of TOTAL

Byte 1	Byte 2	Byte 3	Byte 4	Byte 5
Measured value: floating point number (IEEE 754)				Status

SETTOT_MODETOT_TOTAL module

The module combination consists of the SETTOT, MODETOT and TOTAL functions:
- SETTOT: Control the totalizers via the PROFIBUS master.
- MODETOT: Configure the totalizers via the PROFIBUS master.
- TOTAL: Transmit the totalizer value along with the status to the PROFIBUS master.

Three totalizer blocks are available (slot 5 to 7).

Selection: totalizer configuration

CHANNEL	MODETOT value	Totalizer configuration
33306	0	Balancing
33028	1	Balance the positive flow
32976	2	Balance the negative flow
32928	3	Stop totalizing

Factory setting

Function block	Factory setting: Value MODETOT (meaning)
Totalizer 1, 2 and 3	0 (balancing)

Data structure

Output data of SETTOT and MODETOT

Byte 1	Byte 2
Control variable 1: SETTOT	Control variable 2: MODETOT

Input data of TOTAL

Byte 1	Byte 2	Byte 3	Byte 4	Byte 5
Measured value: floating point number (IEEE 754)				Status

AO module (Analog Output)

Transmit a compensation value from the PROFIBUS master (Class 1) to the measuring device.

Via the AO module, a compensation value along with the status is cyclically transmitted from the PROFIBUS master (Class 1) to the measuring device. The compensation value is depicted in the first four bytes in the form of a floating point number as per the IEEE 754 standard. The fifth byte contains standardized status information pertaining to the compensation value.

One Analog Output block is available (slot 8).

Assigned compensation values

A compensation value is permanently assigned to the individual Analog Output blocks.

CHANNEL	Function block	Compensation value
731	AO 1	External density

The selection is made via: "Expert" menu → Sensor → External compensation

Data structure

Output data of Analog Output

Byte 1	Byte 2	Byte 3	Byte 4	Byte 5
Measured value: floating point number (IEEE 754)				Status

DI module (Discrete Input)

Transmit discrete input values from the measuring device to the PROFIBUS master (Class 1). Discrete input values are used by the measuring device to transmit the state of device functions to the PROFIBUS master (Class 1).

The DI module cyclically transmits the discrete input value, along with the status, to the PROFIBUS master (Class 1). The discrete input value is depicted in the first byte. The second byte contains standardized status information pertaining to the input value.

Two Discrete Input blocks are available (slot 9 to 10).

Selection: device function

The device function can be specified using the CHANNEL parameter.

CHANNEL	Device function	Factory setting: state (meaning)
894	Empty pipe detection	▪ 0 (device function not active) ▪ 1 (device function active)
895	Low flow cut off	
1430	Status verification [1)]	

1) Only available with the "Heartbeat Verification" application package

Factory setting

Function block	Factory setting
DI 1	Empty pipe detection
DI 2	Low flow cut off

Data structure

Input data of Discrete Input

Byte 1	Byte 2
Discrete	Status

DO module (Discrete Output)

Transmit discrete output values from the PROFIBUS master (Class 1) to the measuring device. Discrete output values are used by the PROFIBUS master (Class 1) to enable and disable device functions.

The DO module cyclically transmits the discrete output value, along with the status, to the measuring device. The discrete output value is depicted in the first byte. The second byte contains standardized status information pertaining to the output value.

Two Discrete Output blocks are available (slot 11 to 12).

Assigned device functions

A device function is permanently assigned to the individual Discrete Output blocks.

CHANNEL	Function block	Device function	Values: control (meaning)
891	DO 1	Flow override	▪ 0 (disable device function) ▪ 1 (enable device function)
1429	DO 2	Start verification [1]	

1) Only available with the "Heartbeat Verification" application package

Data structure

Output data of Discrete Output

Byte 1	Byte 2
Discrete	Status

EMPTY_MODULE module

This module is used to assign empty spaces arising from modules not being used in the slots (→ 72).

10 Commissioning

10.1 Function check

Before commissioning the device, make sure that the post-installation and post-connection checks have been performed.

- "Post-installation check" checklist (→ 34)
- "Post-connection check" checklist (→ 47)

10.2 Switching on the measuring device

After a successful function check, switch on the measuring device.

After a successful startup, the local display switches automatically from the startup display to the operational display.

If nothing appears on the local display or a diagnostic message is displayed, refer to the section on "Diagnostics and troubleshooting" (→ 101).

10.3 Establishing a connection via FieldCare

- For FieldCare connection (→ 66)
- For establishing a connection via FieldCare (→ 67)
- For FieldCare user interface (→ 68)

10.4 Configuring the device address via software

In the **"Communication" submenu** the device address can be set.

Navigation
"Setup" menu → Communication → Device address

10.4.1 PROFIBUS network

At time of delivery, the measuring device has the following factory setting:

Device address	126

If hardware addressing is active, software addressing is blocked (→ 45)

10.5 Setting the operating language

Factory setting: English or ordered local language

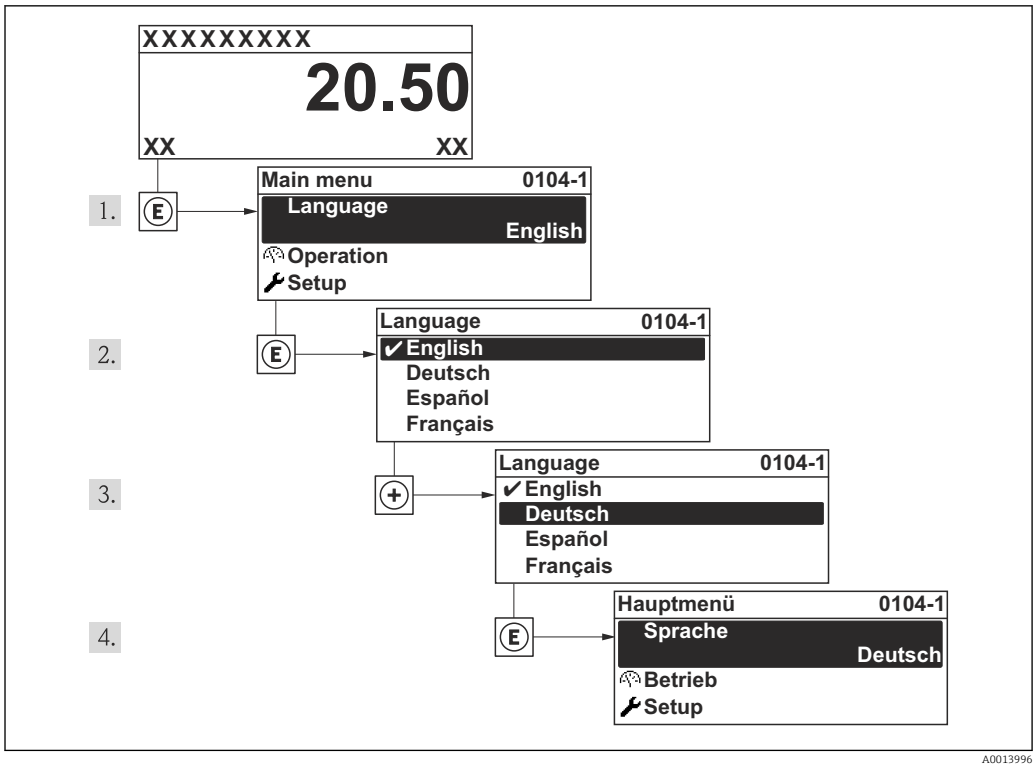

24 *Using the example of the local display*

10.6 Configuring the measuring device

The **Setup** menu with its guided wizards contains all the parameters needed for standard operation.

Navigation to the **Setup** menu

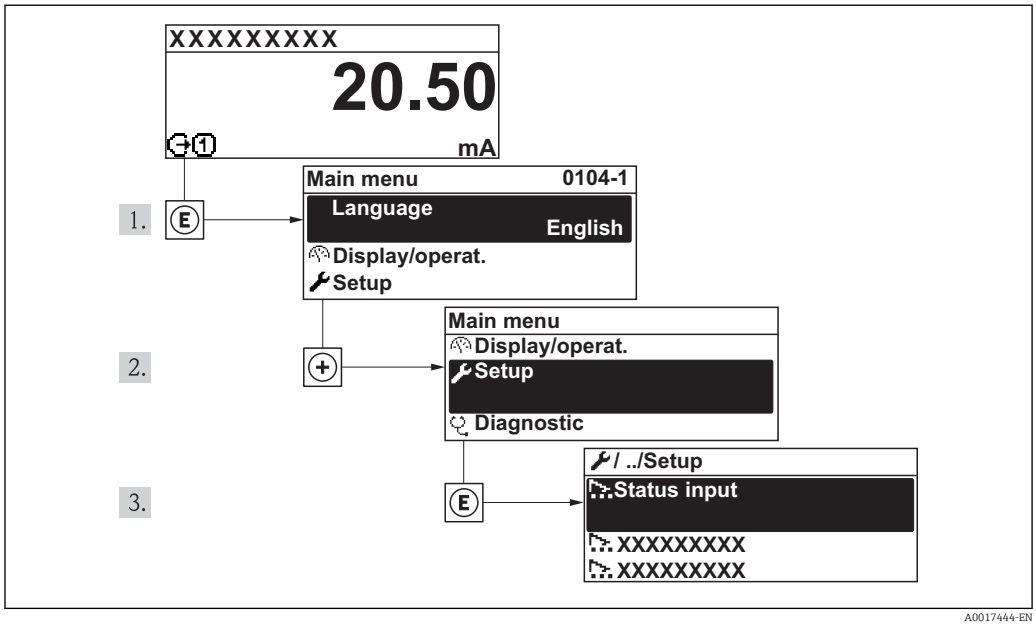

25 *Using the example of the local display*

Overview of the wizards in the "Setup" menu

Setup	→	Device tag	(→ 79)

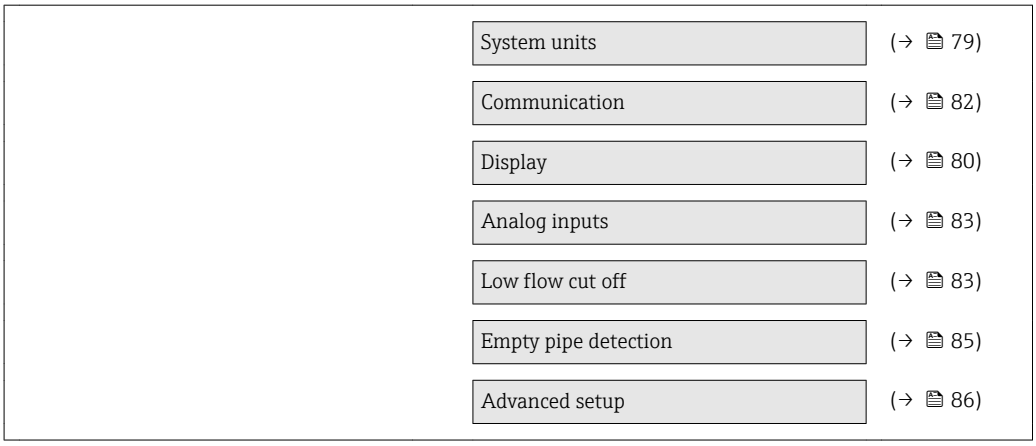

10.6.1 Defining the tag name

To enable fast identification of the measuring point within the system, you can enter a unique designation using the **Device tag** parameter and thus change the factory setting.

The number of characters displayed depends on the characters used.

For information on the tag name in the "FieldCare" operating tool (→ 68)

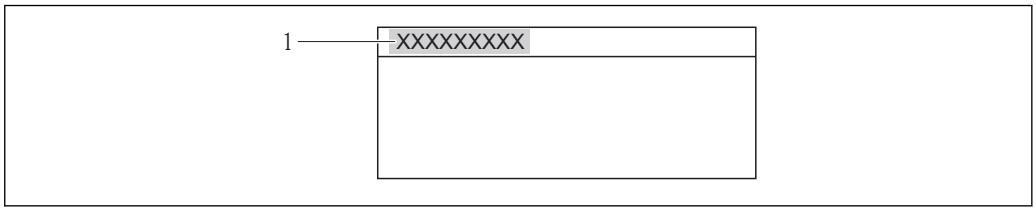

26 Header of the operational display with tag name

1 Device tag

Navigation

"Setup" menu → Device tag

Parameter overview with brief description

Parameter	Description	User entry	Factory setting
Device tag	Enter the name for the measuring point.	Max. 32 characters, such as letters, numbers or special characters (e.g. @, %, /).	Promag 400 DP

10.6.2 Setting the system units

In the **System units** submenu the units of all the measured values can be set.

Navigation

"Setup" menu → System units

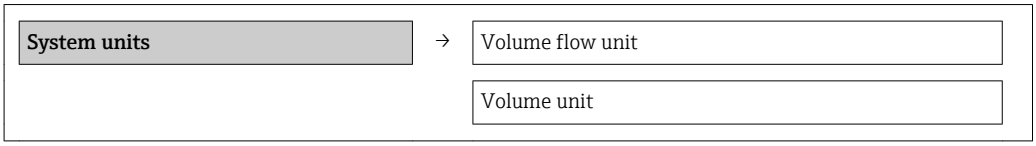

	Conductivity unit
	Temperature unit
	Mass flow unit
	Mass unit
	Density unit

Parameter overview with brief description

Parameter	Description	Selection	Factory setting
Volume flow unit	Select volume flow unit. *Result* The selected unit applies for: ▪ Output ▪ Low flow cut off ▪ Simulation process variable	Unit choose list	Country-specific: ▪ l/h ▪ gal/min (us)
Volume unit	Select volume unit. **Result** The selected unit is taken from: **Volume flow unit** parameter	Unit choose list	Country-specific: ▪ l ▪ gal (us)
Conductivity unit	Select conductivity unit. *Result* The selected unit applies for: Simulation process variable	Unit choose list	µS/cm
Temperature unit	Select temperature unit. *Result* The selected unit applies for: ▪ Output ▪ Reference temperature ▪ Simulation process variable	Unit choose list	Country-specific: ▪ °C (Celsius) ▪ °F (Fahrenheit)
Mass flow unit	Select mass flow unit. *Result* The selected unit applies for: ▪ Output ▪ Low flow cut off ▪ Simulation process variable	Unit choose list	Country-specific: ▪ kg/h ▪ lb/min
Mass unit	Select mass unit. *Result* The selected unit is taken from: **Mass flow unit** parameter	Unit choose list	Country-specific: ▪ kg ▪ lb
Density unit	Select density unit. *Result* The selected unit applies for: ▪ Output ▪ Simulation process variable ▪ Density adjustment (in **Expert** menu)	Unit choose list	Country-specific: ▪ kg/l ▪ lb/ft³

10.6.3 Configuring the local display

The **Display** wizard guides you systematically through all the parameters that can configured for configuring the local display.

Navigation
"Setup" menu → Display

Structure of the wizard

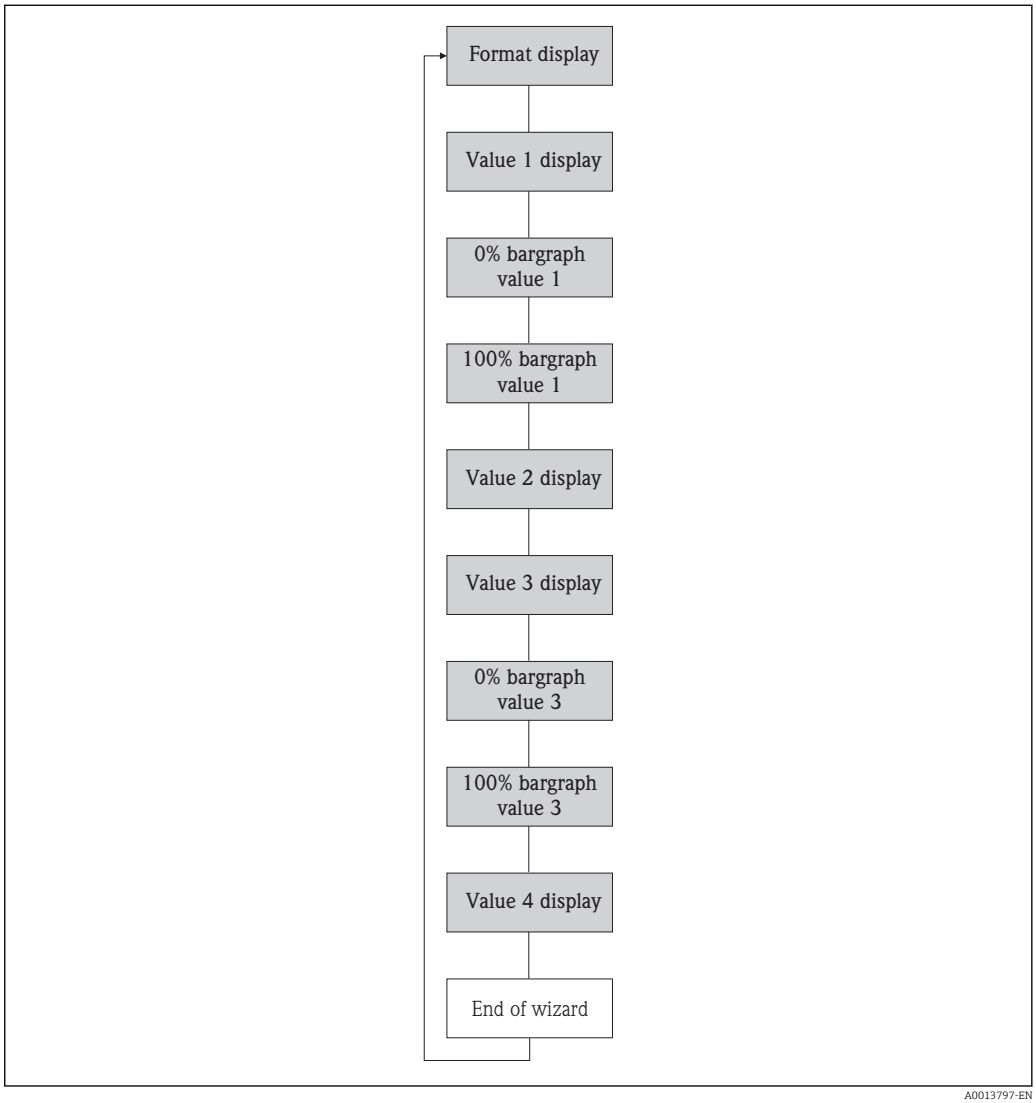

27 *"Display" wizard in the "Setup" menu*

Parameter overview with brief description

Parameter	Description	Selection / User entry	Factory setting
Format display	Select how measured values are shown on the display.	▪ 1 value, max. size ▪ 1 bargraph + 1 value ▪ 2 values ▪ 1 value large + 2 values ▪ 4 values	1 value, max. size
Value 1 display	Select the measured value that is shown on the local display.	▪ Volume flow ▪ Mass flow ▪ Conductivity ▪ Totalizer 1 ▪ Totalizer 2 ▪ Totalizer 3 ▪ Temperature ▪ Electronic temperature	Volume flow

Parameter	Description	Selection / User entry	Factory setting
0% bargraph value 1	Enter 0% value for bar graph display.	Signed floating-point number	0 l/h
100% bargraph value 1	Enter 100% value for bar graph display.	Signed floating-point number	0.025 l/h
Value 2 display	Select the measured value that is shown on the local display.	Picklist (see 1st display value)	None
Value 3 display	Select the measured value that is shown on the local display.	Picklist (see 1st display value)	None
0% bargraph value 3	Enter 0% value for bar graph display.	Signed floating-point number	0
100% bargraph value 3	Enter 100% value for bar graph display.	Signed floating-point number	0
Value 4 display	Select the measured value that is shown on the local display.	Picklist (see 1st display value)	None

10.6.4 Configuring the communication interface

The **"Communication" submenu** guides you systematically through all the parameters that have to be configured for selecting and setting the communication interface.

Navigation
"Setup" menu → Communication

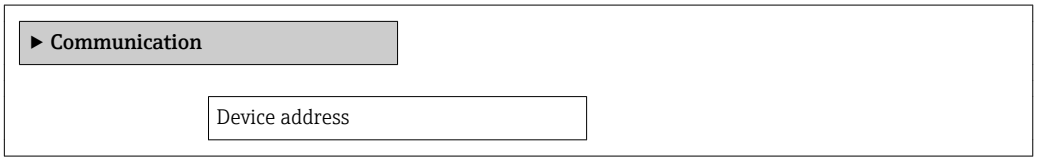

Parameter overview with brief description

Parameter	Description	User entry	Factory setting
Device address	Enter device address.	0 to 126	126

10.6.5 Configuring the analog inputs

The **Analog inputs** submenu guides you systematically to the individual **Analog input 1 to 4** submenu. From here you get to the parameters of the individual analog input.

Navigation
"Setup" menu → Analog inputs

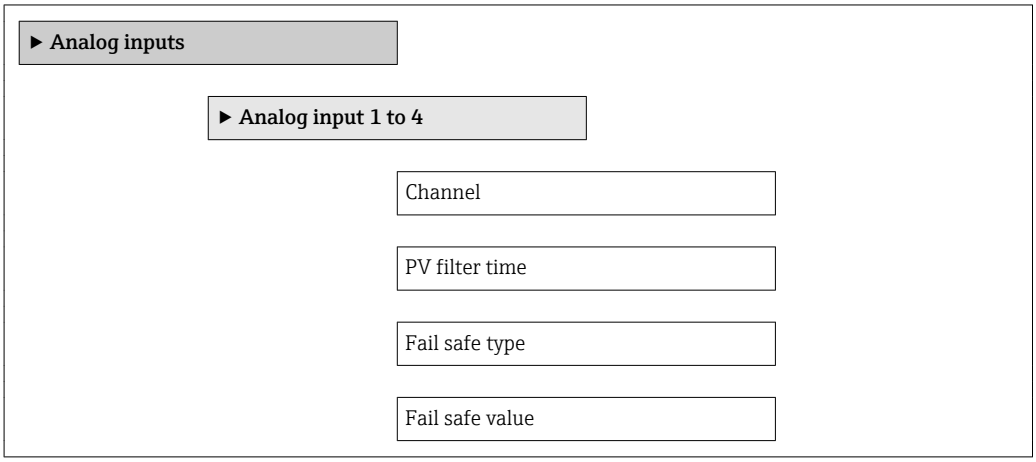

Parameter overview with brief description

Parameter	Description	Selection / User entry	Factory setting
Channel	Select the process variable.	▪ Volume flow ▪ Mass flow ▪ Flow velocity ▪ Conductivity ▪ Electronic temperature	Volume flow
PV filter time	Specify a time to suppress signal peaks. During the specified time the totalizer does not respond to an erratic increase in the process variable.	Positive floating-point number	0
Fail safe type	Select the failure mode.	▪ Fail safe value ▪ Fallback value ▪ Off	Off
Fail safe value	Specify the value to be output when an error occurs.	Signed floating-point number	0

10.6.6 Configuring the low flow cut off

The **Low flow cut off** wizard guides you systematically through all the parameters that have to be set for configuring the low flow cut off.

Navigation
"Setup" menu → Low flow cut off

Structure of the wizard

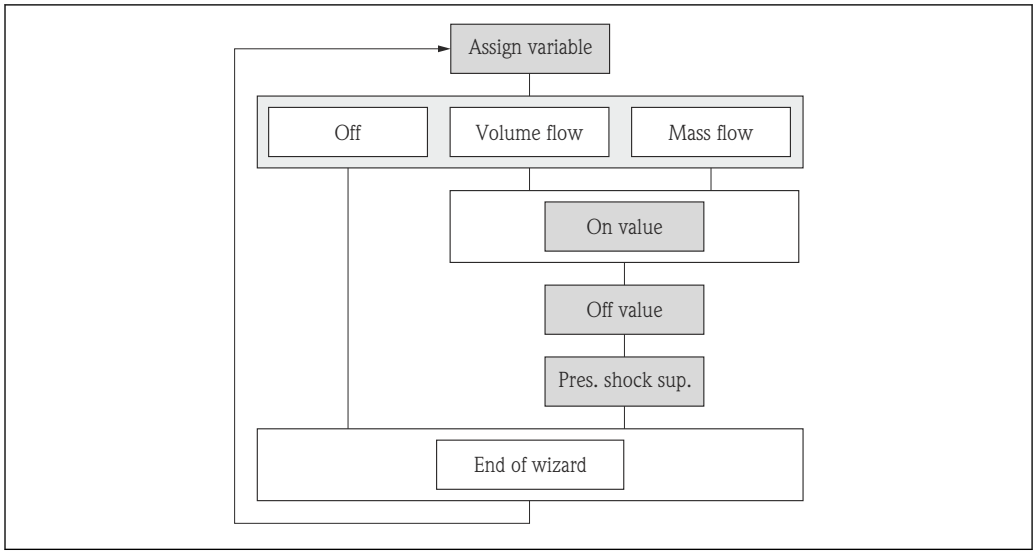

28 "Low flow cut off" wizard in the "Setup" menu

Parameter overview with brief description

Parameter	Description	Selection / User entry	Factory setting
Assign process variable	Select process variable for low flow cut off.	▪ Off ▪ Volume flow ▪ Mass flow	Volume flow
On value low flow cutoff	Enter on value for low flow cut off.	Signed floating-point number	0 l/h
Off value low flow cutoff	Enter off value for low flow cut off.	0 to 100.0 %	50 %
Pressure shock suppression	Enter time frame for signal suppression (= active pressure shock suppression).	0 to 100 s	0 s

10.6.7 Configuring empty pipe detection

The **Empty pipe detection** wizard guides you systematically through all the parameters that have to be set for configuring the low flow cut off.

Navigation
"Setup" menu → Empty pipe detection

Structure of the wizard

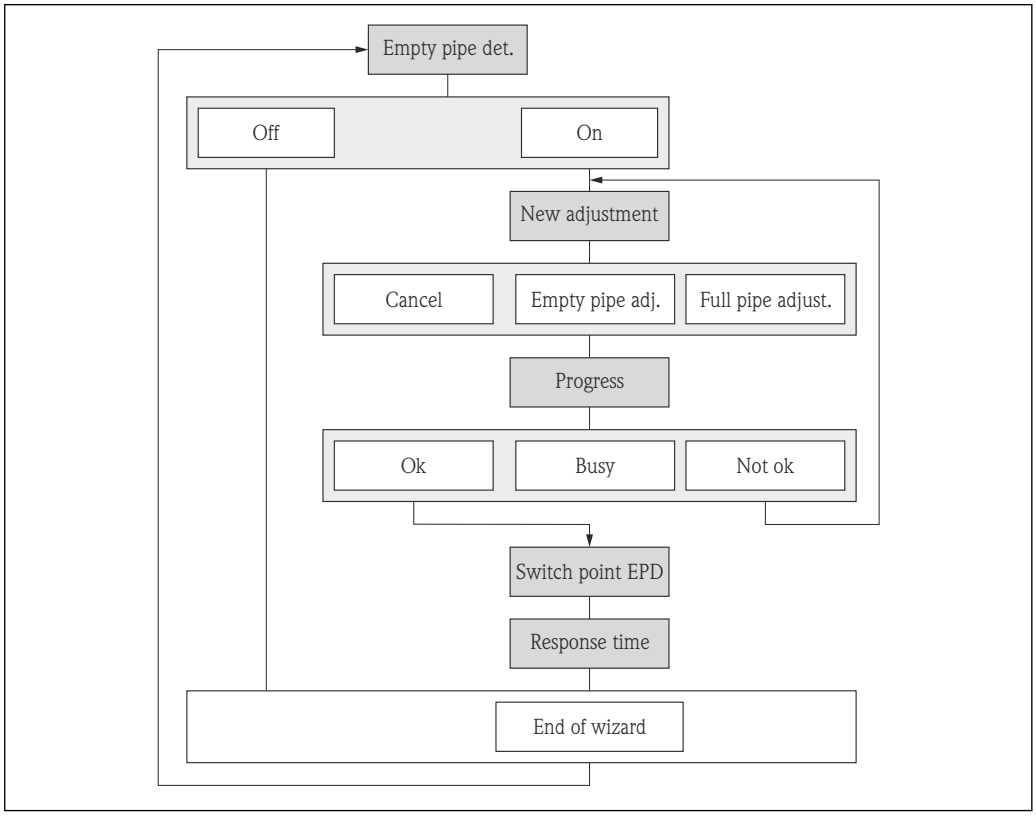

29 *"Empty pipe detection" wizard in the "Setup" menu*

Parameter overview with brief description

Parameter	Description	Selection / User interface / User entry	Factory setting
Empty pipe detection	Switch empty pipe detection on and off.	▪ Off ▪ On	Off
New adjustment	Select type of adjustment.	▪ Cancel ▪ Empty pipe adjust ▪ Full pipe adjust	Cancel
Progress		▪ Ok ▪ Busy ▪ Not ok	
Switch point empty pipe detection	Enter hysteresis in %, below this value the measuring tube will detected as empty.	0 to 100 %	50 %
Response time empty pipe detection	Enter the time before diagnostic message S862 "Pipe empty" is displayed for empty pipe detection.	0 to 100 s	1 s

10.7 Advanced settings

The **Advanced setup** submenu with its submenus contains parameters for specific settings.

Navigation to the "Advanced setup" submenu

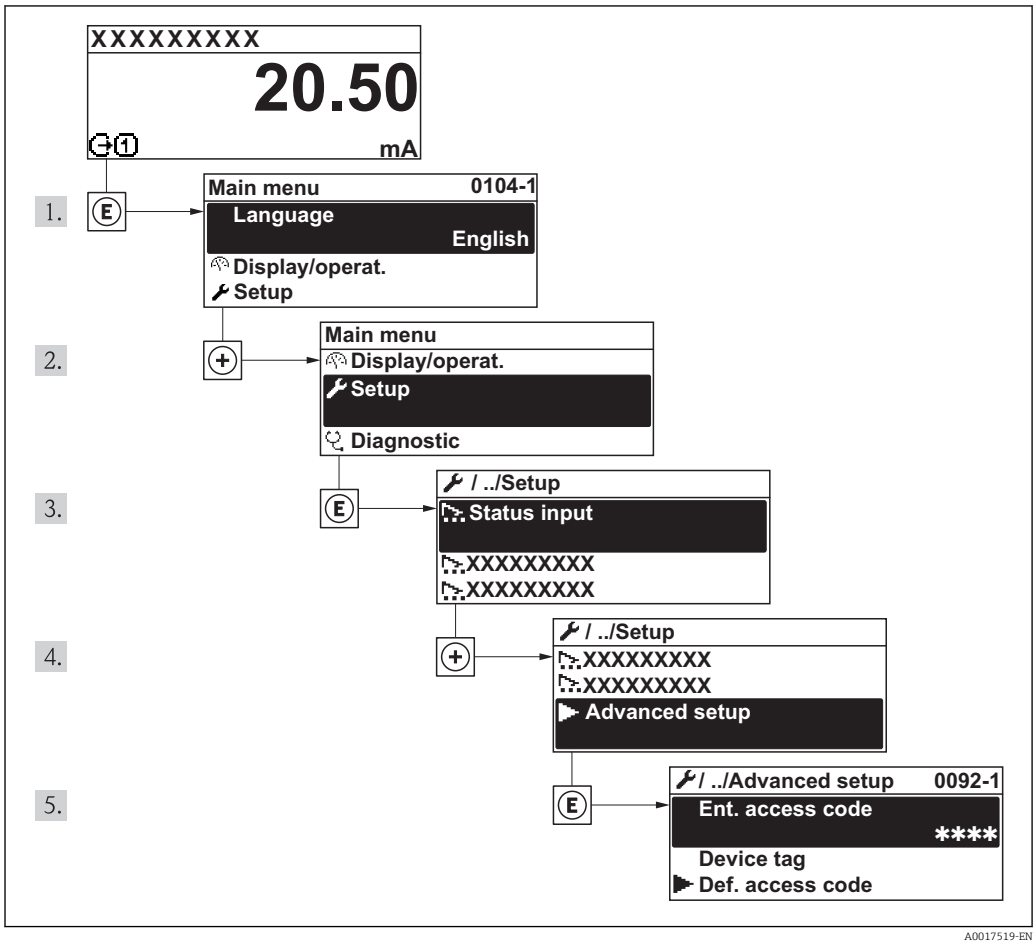

30 *Using the example of the local display*

Navigation

"Setup" menu → Advanced setup

Overview of the parameters and submenus in the "Advanced setup" submenu

Advanced setup	→	Enter access code		(→ 61)
		Sensor adjustment		(→ 87)
		Totalizer 1 to 3		(→ 87)
		Display		(→ 89)
		Electrode cleaning circuit [1]		(→ 91)
		Administration	→ **Define access code**	(→ 93)

	Device reset	(→ 115)

1) Order code for "Application package", option EC "ECC electrode cleaning"

10.7.1 Carrying out a sensor adjustment

The **Sensor adjustment** submenu contains parameters that pertain to the functionality of the sensor.

Navigation

"Setup" menu → Advanced setup → Sensor adjustment

Structure of the submenu

Parameter overview with brief description

Parameter	Description	Selection	Factory setting
Installation direction	Set sign of flow direction to match the direction of the arrow on the sensor.	▪ Flow in arrow direction ▪ Flow against arrow direction	Flow in arrow direction

10.7.2 Configuring the totalizer

In the **"Totalizer 1 to 3" submenu** the individual totalizers can be configured.

Navigation

"Setup" menu → Advanced setup → Totalizer 1 to 3

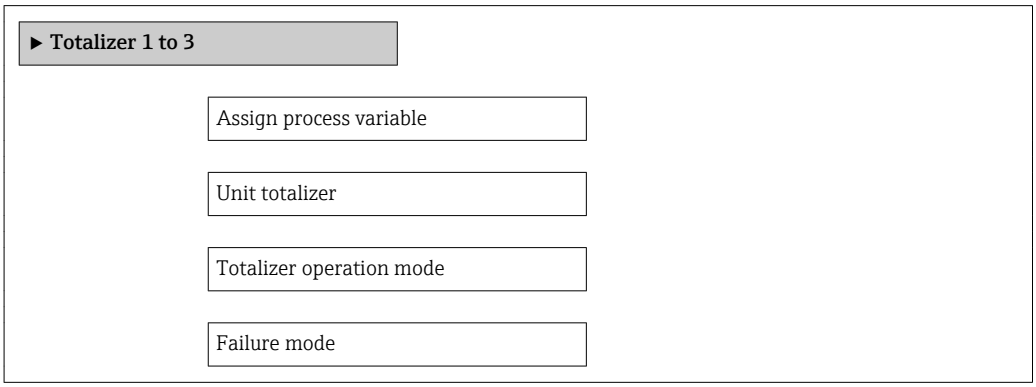

Parameter overview with brief description

Parameter	Description	Selection	Factory setting
Totalizer operation mode	Select totalizer calculation mode.	▪ Net flow total ▪ Forward flow total ▪ Reverse flow total	Net flow total
Assign process variable	Assignment of a process variable to the totalizer.	▪ Volume flow ▪ Mass flow	Volume flow
Unit totalizer		Unit choose list	m^3

Parameter	Description	Selection	Factory setting
Control Totalizer 1 to 3	Control totalizer value.	▪ Totalize ▪ Reset + hold ▪ Preset + hold	Totalize
Totalizer operation mode		▪ Net flow total ▪ Forward flow total ▪ Reverse flow total ▪ Last valid value	Net flow total
Failure mode		▪ Stop ▪ Actual value ▪ Last valid value	Actual value

10.7.3 Carrying out additional display configurations

In the **"Display" submenu** you can set all the parameters involved in the configuration of the local display.

Navigation
"Setup" menu → Advanced setup → Display

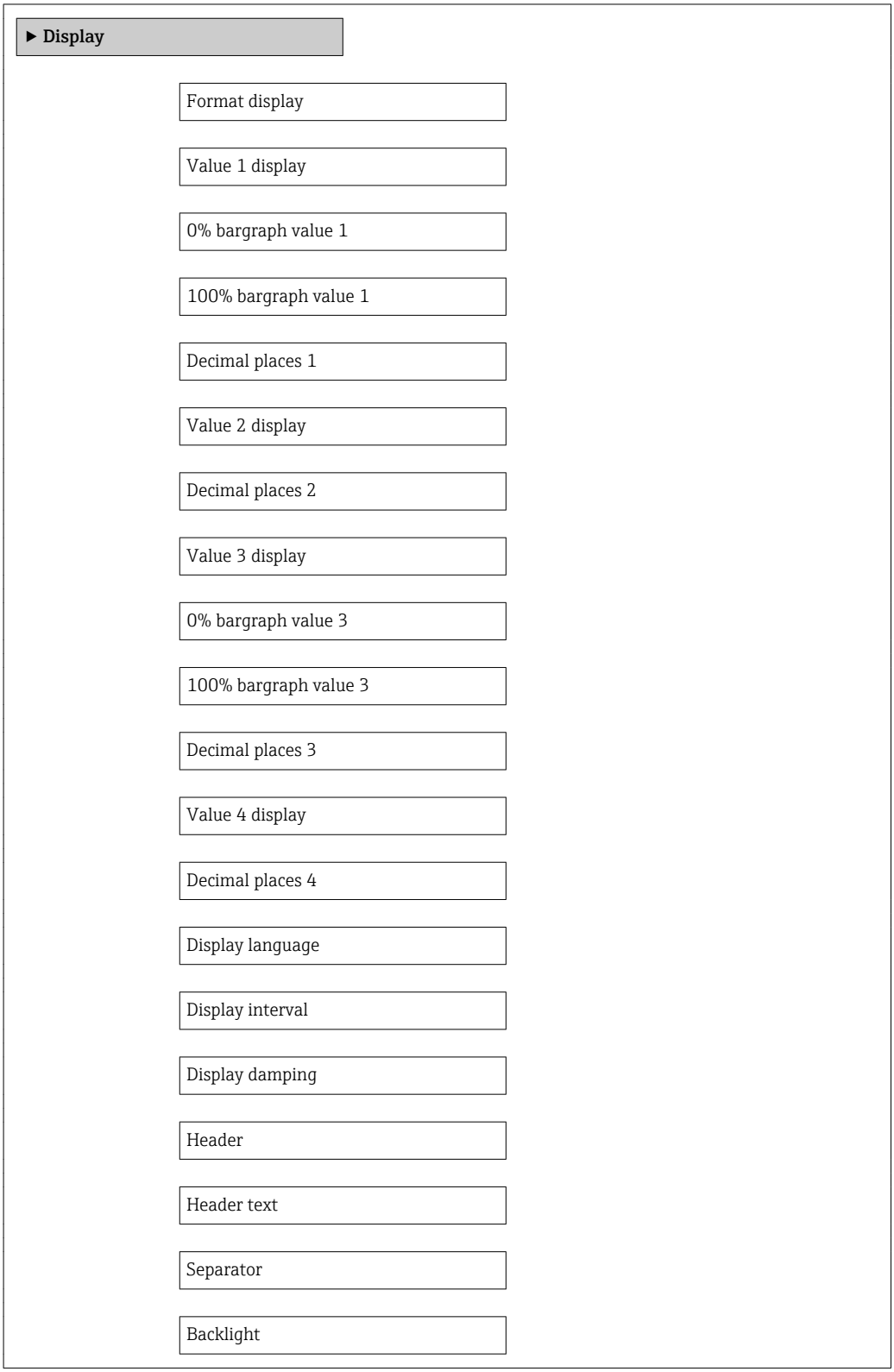

Parameter overview with brief description

Parameter	Description	Selection / User entry	Factory setting
Format display	Select how measured values are shown on the display.	▪ 1 value, max. size ▪ 1 bargraph + 1 value ▪ 2 values ▪ 1 value large + 2 values ▪ 4 values	1 value, max. size
Value 1 display	Select the measured value that is shown on the local display.	▪ Volume flow ▪ Mass flow ▪ Conductivity ▪ Totalizer 1 ▪ Totalizer 2 ▪ Totalizer 3 ▪ Temperature ▪ Electronic temperature	Volume flow
0% bargraph value 1	Enter 0% value for bar graph display.	Signed floating-point number	0 l/h
100% bargraph value 1	Enter 100% value for bar graph display.	Signed floating-point number	0.025 l/h
Decimal places 1	Select the number of decimal places for the display value.	▪ x ▪ x.x ▪ x.xx ▪ x.xxx ▪ x.xxxx	x.xx
Value 2 display	Select the measured value that is shown on the local display.	Picklist (see 1st display value)	None
Decimal places 2	Select the number of decimal places for the display value.	▪ x ▪ x.x ▪ x.xx ▪ x.xxx ▪ x.xxxx	x.xx
Value 3 display	Select the measured value that is shown on the local display.	Picklist (see 1st display value)	None
0% bargraph value 3	Enter 0% value for bar graph display.	Signed floating-point number	0
100% bargraph value 3	Enter 100% value for bar graph display.	Signed floating-point number	0
Decimal places 3	Select the number of decimal places for the display value.	▪ x ▪ x.x ▪ x.xx ▪ x.xxx ▪ x.xxxx	x.xx
Value 4 display	Select the measured value that is shown on the local display.	Picklist (see 1st display value)	None
Decimal places 4	Select the number of decimal places for the display value.	▪ x ▪ x.x ▪ x.xx ▪ x.xxx ▪ x.xxxx	x.xx

Parameter	Description	Selection / User entry	Factory setting
Display language	Set display language.	▪ English ▪ Deutsch ▪ Français ▪ Español ▪ Italiano ▪ Nederlands ▪ Portuguesa ▪ Polski ▪ русский язык (Russian) ▪ Svenska ▪ Türkçe ▪ 中文 (Chinese) ▪ 日本語 (Japanese) ▪ 한국어 (Korean) ▪ العَرَبيّة (Arabic) ▪ Bahasa Indonesia ▪ ภาษาไทย (Thai) ▪ tiếng Việt (Vietnamese) ▪ čeština (Czech)	English (alternatively, the ordered language is preset in the device)
Display interval	Set time measured values are shown on display if display alternates between values.	1 to 10 s	5 s
Display damping	Set display reaction time to fluctuations in the measured value.	0.0 to 999.9 s	0.0 s
Header	Select header contents on local display.	▪ Device tag ▪ Free text	Device tag
Header text	Enter display header text.		----------
Separator	Select decimal separator for displaying numerical values.	▪ . ▪ ,	.
Backlight	Switch the local display backlight on and off.	▪ Disable ▪ Enable	Enable

10.7.4 Performing electrode cleaning

The **Electrode cleaning circuit** wizard guides you systematically through all the parameters that have to be set for configuring electrode cleaning.

The wizard only appears if the device was ordered with an electrode cleaning circuit.

Navigation

"Setup" menu → Advanced setup → Electrode cleaning circuit

Structure of the submenu

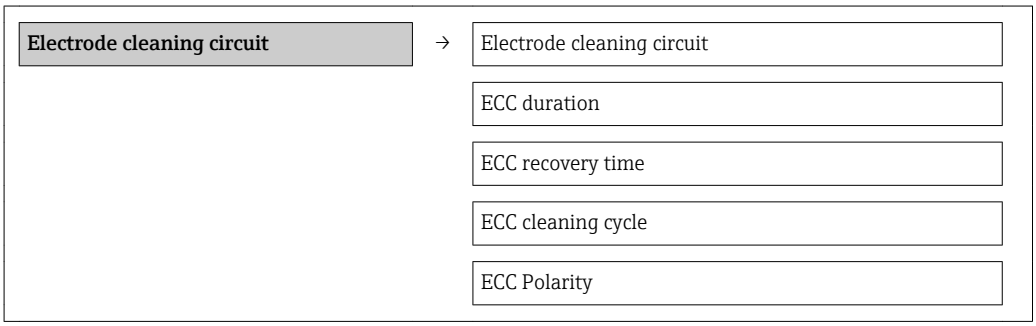

Parameter overview with brief description

Parameter	Description	Selection / User entry / User interface	Factory setting
Electrode cleaning circuit	Enable the cyclic electrode cleaning circuit.	▪ Off ▪ On	Off
ECC duration	Enter the duration of electrode cleaning in seconds.	0.01 to 30 s	2 s
ECC recovery time	Define recovery time after electrode cleaning. During this time the current output values will be held at last valid value.	1 to 3.0^{+38} s	5 s
ECC cleaning cycle	Enter the pause duration between electrode cleaning cycles.	0.5 to 168 h	40 min
ECC Polarity	Select the polarity of the electrode cleaning circuit.	▪ Positive ▪ Negative	Depends on the electrode material

10.8 Simulation

The **"Simulation" submenu** enables you to simulate, without a real flow situation, various process variables in the process and the device alarm mode and to verify downstream signal chains (switching valves or closed-control loops).

The parameters displayed depend on:
- The selected device order
- The set operating mode of the pulse/frequency/switch outputs

Navigation

"Diagnostics" menu → Simulation

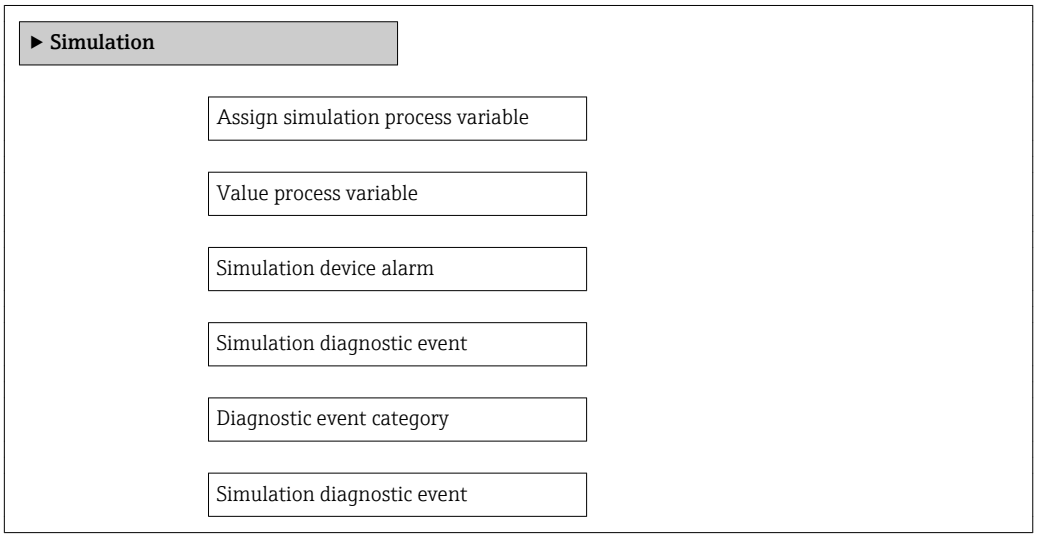

Parameter overview with brief description

Parameter	Prerequsite	Description	Selection / User entry	Factory setting
Assign simulation process variable	–	Select a process variable for the simulation process that is activated.	▪ Off ▪ Volume flow ▪ Mass flow ▪ Conductivity	Off
Value process variable	A process variable is selected in the **Assign simulation process variable** parameter.	Enter the simulation value for the selected process variable.	Signed floating-point number	0
Simulation device alarm	–	Switch the device alarm on and off.	▪ Off ▪ On	Off
Diagnostic event category	–	Select the category of the diagnostic event.	▪ Sensor ▪ Electronics ▪ Configuration ▪ Process	Sensor
Simulation diagnostic event	–	Switch simulation of the diagnostic event on and off. For the simulation, you can choose from the diagnostic events of the category selected in the **Diagnostic event category** parameter.	▪ Off ▪ Picklist Diagnostic events (depends on the selected category)	Off

10.9 Protecting settings from unauthorized access

The following options exist for protecting the configuration of the measuring device from unintentional modification after commissioning:
- Write protection via access code for the local display and Web browser (→ 🖹 93)
- Write protection via write protection switch (→ 🖹 94)
- Write protection via keypad lock (→ 🖹 61)

10.9.1 Write protection via access code

The effects of the customer-specific access code are as follows:
- Via local operation, the parameters for the measuring device configuration are write-protected and their values can no longer be changed.
- Device access via the Web browser is protected, as are the parameters for the measuring device configuration.

Navigation
"Setup" menu → Advanced setup → Administration → Define access code

Structure of the submenu

Define access code	→	Define access code
		Confirm access code

Defining the access code via local display

1. Navigate to the **Enter access code** parameter.
2. Define a max. 4-digit numeric code as an access code.
3. Enter the access code again to confirm the code.
   ↳ The 🔒-symbol appears in front of all write-protected parameters.

The device automatically locks the write-protected parameters again if a key is not pressed for 10 minutes in the navigation and editing view. The device locks the write-protected parameters automatically after 60 s if the user skips back to the operational display mode from the navigation and editing view.

- If write access is activated via access code, it can be also be deactivated only via the access code (→ 61).
- The user role with which the user is currently logged on via the local display is indicated by the **Access status display** parameter. Navigation path: "Operation" menu → Access status display.

Parameters which can always be modified via the local display

Certain parameters that do not affect the measurement are excepted from write protection via the local display. Despite the defined access code, these parameters can always be modified even if the other parameters are locked.

Defining the access code via the Web browser

1. Navigate to the **Enter access code** parameter.
2. Define a max. 4-digit numeric code as an access code.
3. Enter the access code again to confirm the code.
   ↳ The Web browser switches to the login page.

If no action is performed for 10 minutes, the Web browser automatically returns to the login page.

The user role with which the user is currently logged on via the Web browser is indicated by the **Access status tooling** parameter. Navigation path: Operation → Access status tooling

10.9.2 Write protection via write protection switch

Unlike write protection via user-specific access code, this allows write access to the entire operating menu - other than the **"Contrast display" parameter** - to be locked.

The parameter values are now read only and cannot be edited any more (exception **"Contrast display" parameter**):
Via local display

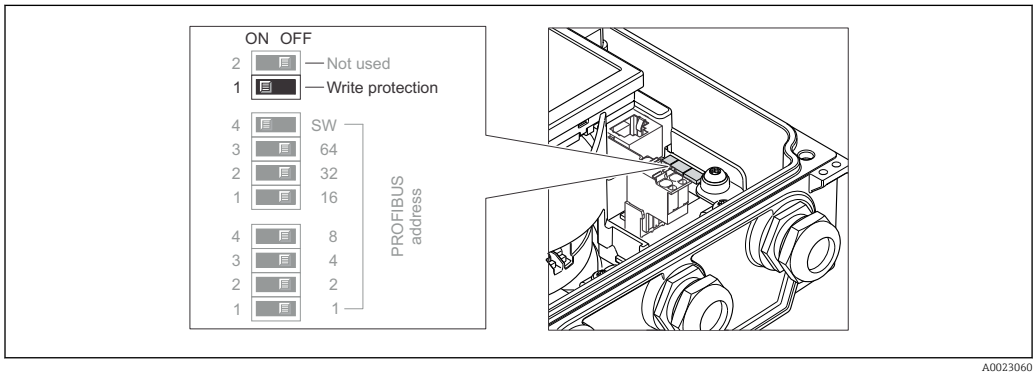

1. Loosen the 4 fixing screws on the housing cover and open the housing cover.
2. Setting the write protection switch (WP) on the main electronics module to the ON position enables the hardware write protection. Setting the write protection switch (WP) on the main electronics module to the OFF position (factory setting) disables the hardware write protection.
   ↳ If hardware write protection is enabled, the **Hardware locked** option is displayed in the **Locking status** parameter (→ 96). In addition, on the local display

the 🔒-symbol appears in front of the parameters in the header of the operational display and in the navigation view.

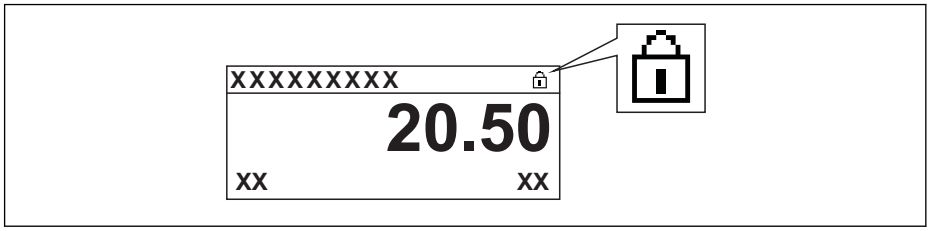

A0015870

If hardware write protection is disabled, no option is displayed in the **Locking status** parameter (→ 📄 96). On the local display, the 🔒-symbol disappears from in front of the parameters in the header of the operational display and in the navigation view.

3. **WARNING!** Excessive tightening torque applied to the fixing screws! Risk of damaging the plastic transmitter. Tighten the fixing screws as per the tightening torque (→ 📄 31).

   Reverse the removal procedure to reassemble the transmitter.

11 Operation

11.1 Reading device locking status

The write protection types that are currently active can be determined using the **Locking status** parameter.

Navigation
"Operation" menu → Locking status

Function scope of "Locking status" parameter

Options	Description
None	The access status displayed in **"Access status display" parameter** applies (→ 61). Only appears on local display.
Hardware locked	The DIP switch for hardware locking is activated on the main electronics module. This prevents write access to the parameters (→ 94).
Temporarily locked	Due to internal processing in the device (e.g. up-/downloading of data, reset), write access to the parameters is blocked for a short time. Once the internal processing has been completed, the parameters can be changed once again.

11.2 Adjusting the operating language

Information (→ 77)

For information on the operating languages supported by the measuring device (→ 152)

11.3 Configuring the display

- Basic settings for local display (→ 80)
- Advanced settings for local display (→ 89)

11.4 Reading measured values

Using the **Measured values** submenu , it is possible to read all the measured values.

"Diagnostics" menu → Measured values

11.4.1 Process variables

The **Process variables** submenu contains all the parameters needed to display the current measured values for every process variable.

Navigation
"Diagnostics" menu → Measured values → Process variables

Structure of the submenu

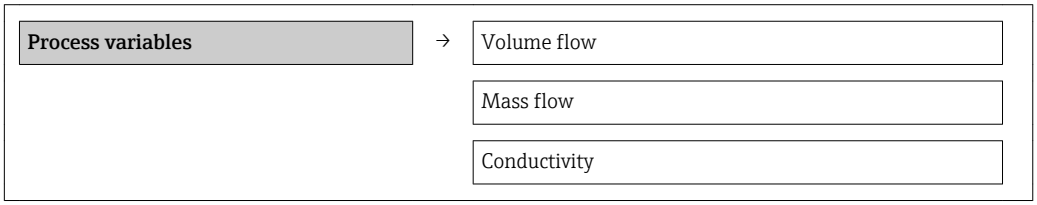

Structure of the submenu

Parameter overview with brief description

Parameter	Description	User interface
Volume flow	Displays the volume flow currently measured.	Signed floating-point number
Mass flow	Displays the mass flow currently calculated.	Signed floating-point number
Conductivity	Displays the corrected volume flow currently calculated.	Signed floating-point number

11.4.2 Totalizer

The **"Totalizer" submenu** contains all the parameters needed to display the current measured values for every totalizer.

Navigation

"Diagnostics" menu → Measured values → Totalizer

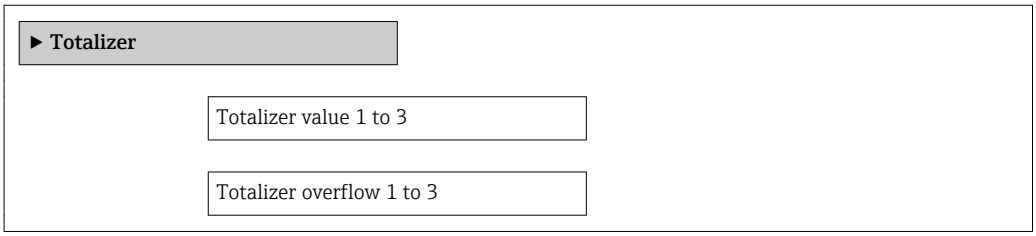

Parameter overview with brief description

Parameter	Prerequsite	Description	Selection / User entry / User interface	Factory setting
Assign process variable	–	Assignment of a process variable to the totalizer.	▪ Volume flow ▪ Mass flow	Volume flow
Totalizer value #	In the **Assign process variable** parameter one of the following options is selected: ▪ Volume flow ▪ Mass flow ▪ Corrected volume flow ▪ Total mass flow ▪ Condensate mass flow ▪ Energy flow ▪ Heat flow difference	Displays the current totalizer counter value.	Signed floating-point number	0 m^3
Totalizer status #	–	Displays the current totalizer status.	▪ Good ▪ Uncertain ▪ Bad	Good
Totalizer status (Hex) #	–	Displays the current status value (hex) of the totalizer.	0 to 255	128

11.5 Adapting the measuring device to the process conditions

The following are available for this purpose:
- Basic settings using the **Setup** menu(→ 78)
- Advanced settings using the **Advanced setup** submenu(→ 86)

11.6 Performing a totalizer reset

In the **Operation** submenu the totalizers are reset:
Control Totalizer 1 to 3

Function scope of "Control Totalizer " parameter

Options	Description
Totalize	The totalizer is started.
Reset + hold	The totaling process is stopped and the totalizer is reset to 0.
Preset + hold	The totaling process is stopped and the totalizer is set to its defined start value from the **Preset value 1 to 3** parameter.

Navigation

"Operation" menu → Operation

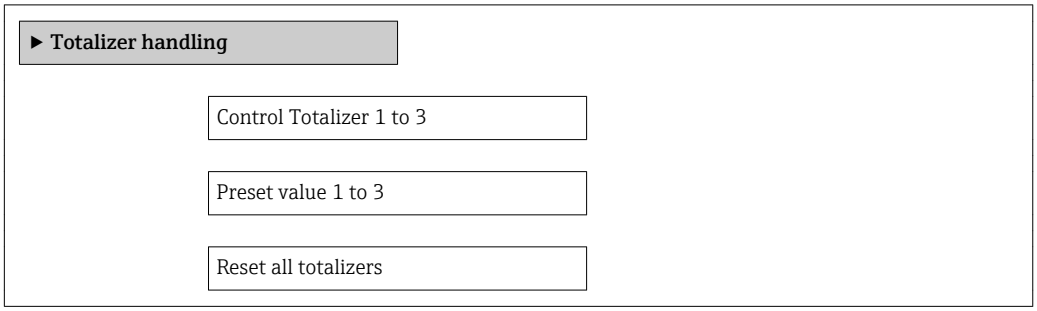

Parameter overview with brief description

Parameter	Description	Selection / User entry	Factory setting
Control Totalizer 1 to 3	Control totalizer value.	▪ Totalize ▪ Reset + hold ▪ Preset + hold ▪ Reset + totalize ▪ Preset + totalize	Totalize
Preset value #	Specify start value for totalizer.	Signed floating-point number	0 m^3

11.7 Showing data logging

In the device, the extended function of the HistoROM must be enabled (order option) so that the **"Data logging" submenu** appears. This contains all the parameters for the measured value history.

The data logging history is also available via the FieldCare plant asset management tool (→ 67).

Function scope

- A total of 1000 measured values can be stored
- 4 logging channels
- Adjustable logging interval for data logging
- Display of the measured value trend for each logging channel in the form of a chart

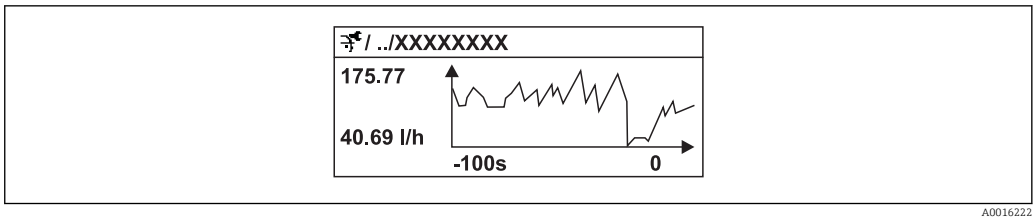

31 *Chart of a measured value trend*

- x-axis: depending on the number of channels selected displays 250 to 1000 measured values of a process variable.
- y-axis: displays the approximate measured value span and constantly adapts this to the ongoing measurement.

If the length of the logging interval or the assignment of the process variables to the channels is changed, the content of the data logging is deleted.

Navigation
"Diagnostics" menu → Data logging

"Data logging" submenu

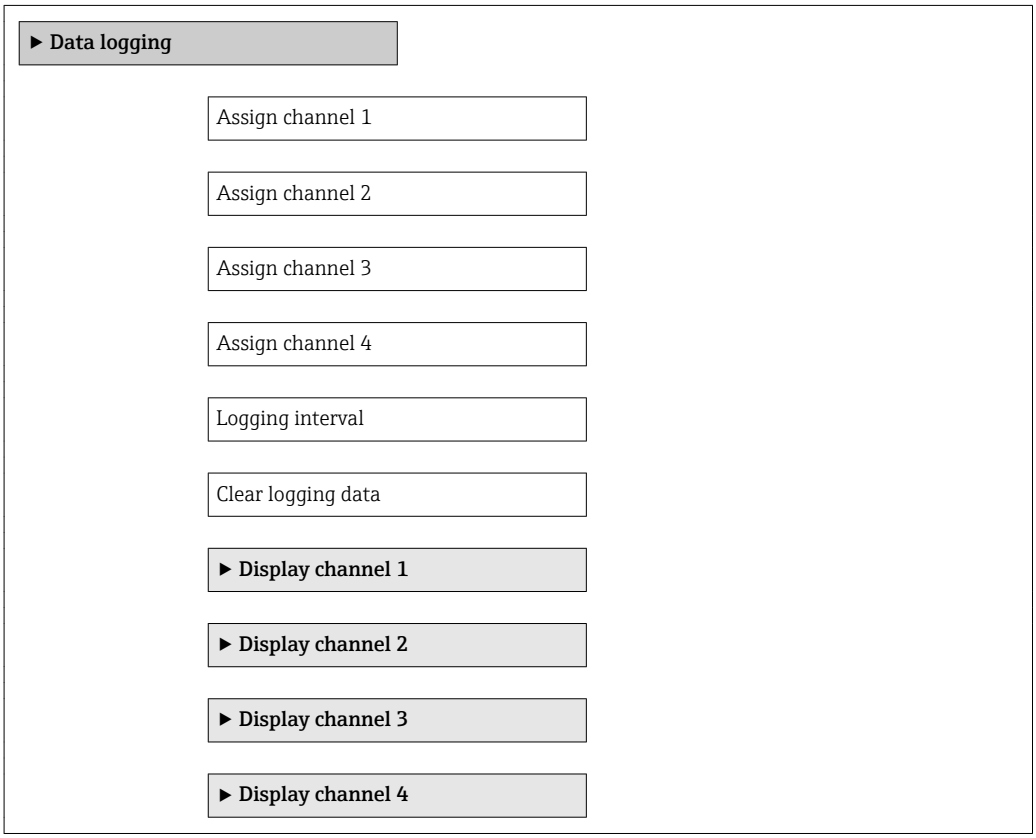

Parameter overview with brief description

Parameter	Description	Selection / User entry	Factory setting
Assign channel 1 to 4	Assign process variable to logging channel.	▪ Off ▪ Volume flow ▪ Mass flow ▪ Flow velocity ▪ Conductivity ▪ Electronic temperature	Off
Logging interval	Define the logging interval for data logging. This value defines the time interval between the individual data points in the memory.	1.0 to 3 600.0 s	10.0 s
Clear logging data	Clear the entire logging data.	▪ Cancel ▪ Clear data	Cancel

12 Diagnostics and troubleshooting

12.1 General troubleshooting

For local display

Problem	Possible causes	Remedy
Local display dark and no output signals	Supply voltage does not match that specified on the nameplate.	Apply the correct supply voltage .
Local display dark and no output signals	No contact between connecting cables and terminals.	Check the connection of the cables and correct if necessary.
Local display dark and no output signals	Terminals are not plugged into the main electronics module correctly.	Check terminals.
Local display dark and no output signals	Main electronics module is defective.	Order spare part (→ 🖹 120).
Local display dark and no output signals	The connector between the main electronics module and display module is not plugged in correctly.	Check the connection and correct if necessary.
Local display dark and no output signals	The connecting cable is not plugged in correctly.	1. Check the connection of the electrode cable and correct if necessary. 2. Check the connection of the coil current cable and correct if necessary.
Local display is dark, but signal output is within the valid range	Display is set too bright or too dark.	▪ Set the display brighter by simultaneously pressing ⊞ + Ⓔ. ▪ Set the display darker by simultaneously pressing ⊟ + Ⓔ.
Local display is dark, but signal output is within the valid range	Display module is defective.	Order spare part (→ 🖹 120).
Backlighting of local display is red	Diagnostic event with "Alarm" diagnostic behavior has occurred.	Take remedial measures (→ 🖹 110)
Text on local display appears in a foreign language and cannot be understood.	Incorrect operating language is configured.	1. Press ⊟ + ⊞ for 2 s ("home position"). 2. Press Ⓔ. 3. Set the desired language in the **Language** parameter.
Message on local display: "Communication Error" "Check Electronics"	Communication between the display module and the electronics is interrupted.	▪ Check the cable and the connector between the main electronics module and display module. ▪ Order spare part (→ 🖹 120).

For output signals

Problem	Possible causes	Remedy
Signal output outside the valid range	Main electronics module is defective.	Order spare part (→ 🖹 120).
Device shows correct value on local display, but signal output is incorrect, though in the valid range.	Configuration error	Check and correct parameter configuration.
Device measures incorrectly.	Configuration error or device is operated outside the application.	1. Check and correct parameter configuration. 2. Observe limit values specified in the "Technical Data".

For access

Problem	Possible causes	Remedy
No write access to parameters	Hardware write protection enabled	Set the write protection switch on the main electronics module to the OFF position (→ 🖹 94).
No write access to parameters	Current user role has limited access authorization	1. Check user role (→ 🖹 61). 2. Enter correct customer-specific access code (→ 🖹 61).
No connection via PROFIBUS DP	PROFIBUS DP bus cable connected incorrectly	Check the terminal assignment .
No connection via PROFIBUS DP	Device plug connected incorrectly	Check the pin assignment of the device plug .
No connection via PROFIBUS DP	PROFIBUS DP cable incorrectly terminated	Check terminating resistor (→ 🖹 46).
Not connecting to Web server	Incorrect setting for the Ethernet interface of the computer	1. Check the properties of the Internet protocol (TCP/IP) (→ 🖹 63). 2. Check the network settings with the IT manager.
Not connecting to Web server	Web server disabled	Via the "FieldCare" operating tool check whether the Web server of the measuring device is enabled and enable it if necessary (→ 🖹 65).
No or incomplete display of contents in the Web browser	▪ JavaScript not enabled ▪ JavaScript cannot be enabled	1. Enable JavaScript. 2. Enter http://192.168.1.212/basic.html as the IP address.
Web browser frozen and operation no longer possible	Data transfer active	Wait until data transfer or current action is finished.
Web browser frozen and operation no longer possible	Connection lost	1. Check cable connection and power supply. 2. Refresh the Web browser and restart if necessary.
Content of Web browser incomplete or difficult to read	Not using optimum version of Web server.	1. Use the correct Web browser version (→ 🖹 62). 2. Clear the Web browser cache and restart the Web browser.
Content of Web browser incomplete or difficult to read	Unsuitable view settings.	Change the font size/display ratio of the Web browser.

12.2 Diagnostic information via light emitting diodes

12.2.1 Transmitter

Various light emitting diodes (LEDs) on the main electronics module of the transmitter provide information on device status.

LED	Color	Meaning
Power	Off	Supply voltage is off or too low
	Green	Supply voltage is ok
Alarm	Off	Device status is ok
	Flashing red	A device error of diagnostic behavior "Warning" has occurred
	Red	▪ A device error of diagnostic behavior "Alarm" has occurred ▪ Boot loader is active
Communication	Flashing white	PROFIBUS DP communication is active

LED	Color	Meaning
Alarm	Green	Measuring device is ok
	Flashing green	Measuring device not configured
	Off	Firmware error
	Red	Main error
	Flashing red	Error
	Flashing red/green	Start measuring device

12.3 Diagnostic information on local display

12.3.1 Diagnostic message

Faults detected by the self-monitoring system of the measuring device are displayed as a diagnostic message in alternation with the operational display.

Operational display in alarm condition	Diagnostic message

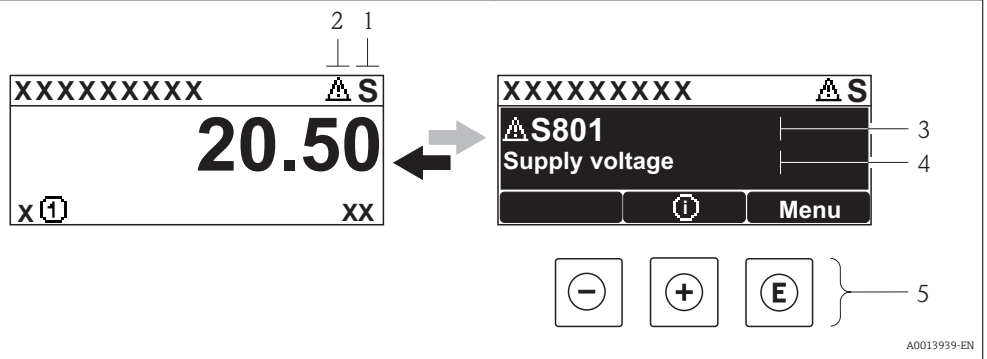

1 *Status signal*
2 *Diagnostic behavior*
3 *Diagnostic behavior with diagnostic code*
4 *Short text*
5 *Operating elements*

If two or more diagnostic events are pending simultaneously, only the message of the diagnostic event with the highest priority is shown.

Other diagnostic events that have occurred can be called up in the **Diagnostics** menu:
- Via parameters (→ 113)
- Via submenus (→ 113)

Status signals

The status signals provide information on the state and reliability of the device by categorizing the cause of the diagnostic information (diagnostic event).

The status signals are categorized according to VDI/VDE 2650 and NAMUR Recommendation NE 107: F = Failure, C = Function Check, S = Out of Specification, M = Maintenance Required

Symbol	Meaning
F A0013956	**Failure** A device error has occurred. The measured value is no longer valid.
C A0013959	**Function check** The device is in service mode (e.g. during a simulation).
S A0013958	**Out of specification** The device is operated: Outside its technical specification limits (e.g. outside the process temperature range)
M A0013957	**Maintenance required** Maintenance is required. The measured value remains valid.

Diagnostic behavior

Symbol	Meaning
A0013961	**Alarm** ▪ Measurement is interrupted. ▪ Signal outputs and totalizers assume the defined alarm condition. ▪ A diagnostic message is generated. ▪ The background lighting changes to red.
A0013962	**Warning** Measurement is resumed. The signal outputs and totalizers are not affected. A diagnostic message is generated.

Diagnostic information

The fault can be identified using the diagnostic information. The short text helps you by providing information about the fault. In addition, the corresponding symbol for the diagnostic behavior is displayed in front of the diagnostic information on the local display.

Operating elements

Key	Meaning
A0013970	**Plus key** *In a menu, submenu* Opens the message about the remedial measures.
A0013952	**Enter key** *In a menu, submenu* Opens the operating menu.

12.3.2 Calling up remedial measures

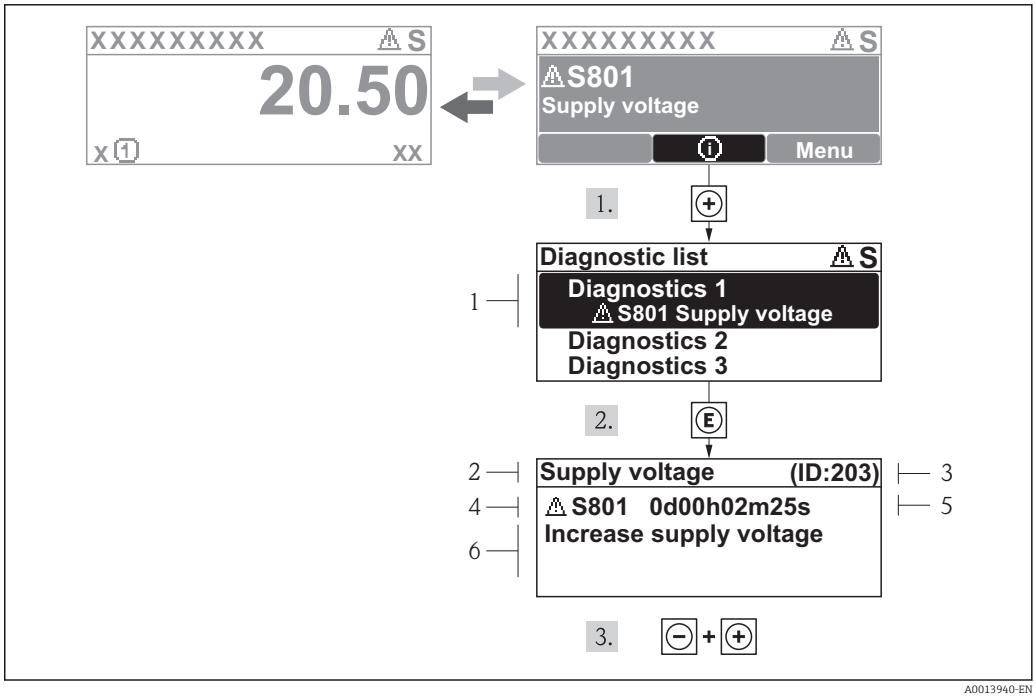

32 *Message for remedial measures*

1 *Diagnostic information*
2 *Short text*
3 *Service ID*
4 *Diagnostic behavior with diagnostic code*
5 *Operation time of occurrence*
6 *Remedial measures*

The user is in the diagnostic message.

1. Press ⊞ (ⓘ symbol).
   ↳ The **Diagnostic list** submenu opens.
2. Select the desired diagnostic event with ⊞ or ⊟ and press Ⓔ .
   ↳ The message for the remedial measures for the selected diagnostic event opens.
3. Press ⊟ + ⊞ simultaneously.
   ↳ The message for the remedial measures closes.

The user is in the **Diagnostics** menu at an entry for a diagnostics event, e.g. in the **Diagnostic list** submenu or the **Previous diagnostics** parameter.

1. Press Ⓔ.
   ↳ The message for the remedial measures for the selected diagnostic event opens.
2. Press ⊟ + ⊞ simultaneously.
   ↳ The message for the remedial measures closes.

12.4 Diagnostic information in the Web browser

12.4.1 Diagnostic options

Any faults detected by the measuring device are displayed in the Web browser on the home page once the user has logged on.

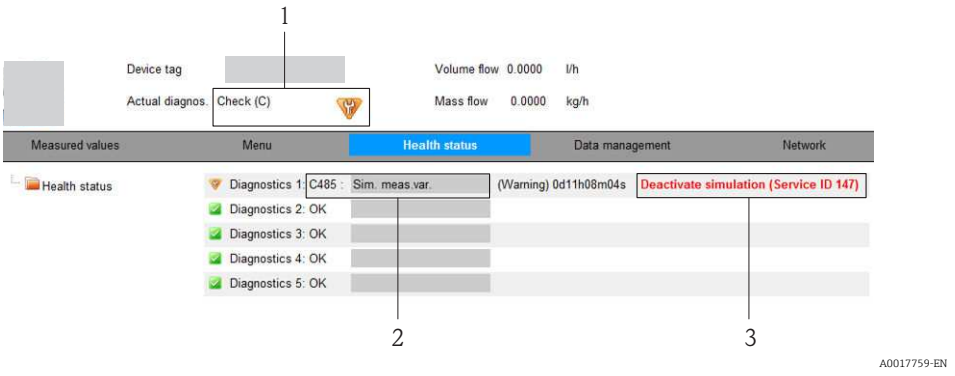

1 *Status area with status signal*
2 *Diagnostic information (→ 🖹 105)*
3 *Remedial measures with Service ID*

Furthermore, diagnostic events that have occurred can be viewed in the **Diagnostics** menu:
- Via parameters (→ 🖹 113)
- Via submenus (→ 🖹 113)

Status signals

The status signals provide information on the state and reliability of the device by categorizing the cause of the diagnostic information (diagnostic event).

Symbol	Meaning
A0017271	**Failure** A device error has occurred. The measured value is no longer valid.
A0017278	**Function check** The device is in service mode (e.g. during a simulation).

Symbol	Meaning
A0017277	**Out of specification** The device is operated: Outside its technical specification limits (e.g. outside the process temperature range)
A0017276	**Maintenance required** Maintenance is required. The measured value is still valid.

The status signals are categorized in accordance with VDI/VDE 2650 and NAMUR Recommendation NE 107.

12.4.2 Calling up remedy information

Remedy information is provided for every diagnostic event to ensure that problems can be rectified quickly. These measures are displayed in red along with the diagnostic event and the related diagnostic information.

12.5 Diagnostic information in FieldCare

12.5.1 Diagnostic options

Any faults detected by the measuring device are displayed on the home page of the operating tool once the connection has been established.

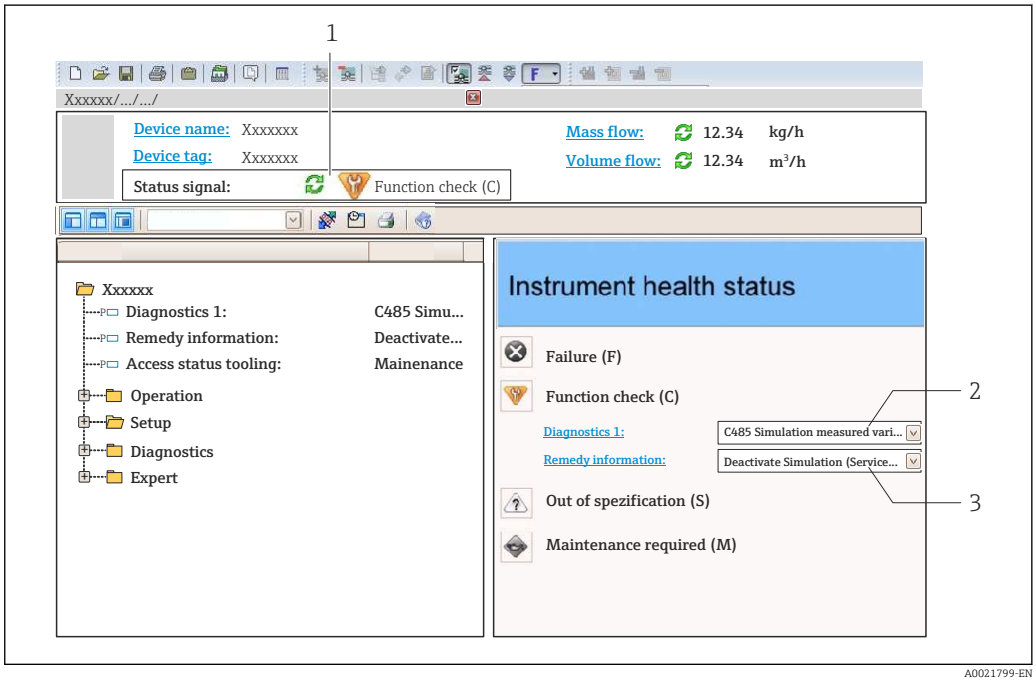

1 *Status area with status signal (→ 104)*
2 *Diagnostic information (→ 105)*
3 *Remedial measures with Service ID*

Furthermore, diagnostic events that have occurred can be viewed in the **Diagnostics** menu:
- Via parameters (→ 113)
- Via submenu (→ 113)

Diagnostic information

The fault can be identified using the diagnostic information. The short text helps you by providing information about the fault. In addition, the corresponding symbol for the diagnostic behavior is displayed in front of the diagnostic information on the local display.

12.5.2 Calling up remedy information

Remedy information is provided for every diagnostic event to ensure that problems can be rectified quickly:
- On the home page
  Remedy information is displayed in a separate field below the diagnostics information.
- In the **Diagnostics** menu
  Remedy information can be called up in the working area of the user interface.

The user is in the **Diagnostics** menu.

1. Call up the desired parameter.
2. On the right in the working area, mouse over the parameter.
   ↳ A tool tip with remedy information for the diagnostic event appears.

12.6 Adapting the diagnostic information

12.6.1 Adapting the diagnostic behavior

Each item of diagnostic information is assigned a specific diagnostic behavior at the factory. The user can change this assignment for certain diagnostic information in the **Diagnostic behavior** submenu .

Diagnostic behavior in accordance with Specification PROFIBUS Profile 3.02, Condensed Status.

"Expert" menu → System → Diagnostic handling → Diagnostic behavior

Available diagnostic behaviors

The following diagnostic behaviors can be assigned:

Diagnostic behavior	Description
Warning	Measurement is resumed. Measured value output via PROFIBUS and totalizers are not affected. A diagnostics message is generated.
Logbook entry only	The device continues to measure. The diagnostic message is entered in the Event logbook (events list) submenu only and is not displayed in alternation with the measured value display.
Off	The diagnostic event is ignored, and no diagnostic message is generated or entered.

Displaying the measured value status

If the Analog Input, Digital Input and Totalizer function blocks are configured for cyclic data transmission, the device status is coded as per PROFIBUS Profile Specification 3.02 and transmitted along with the measured value to the PROFIBUS Master (Class 1) via the coding byte (byte 5). The coding byte is split into three segments: Quality, Quality Substatus and Limits.

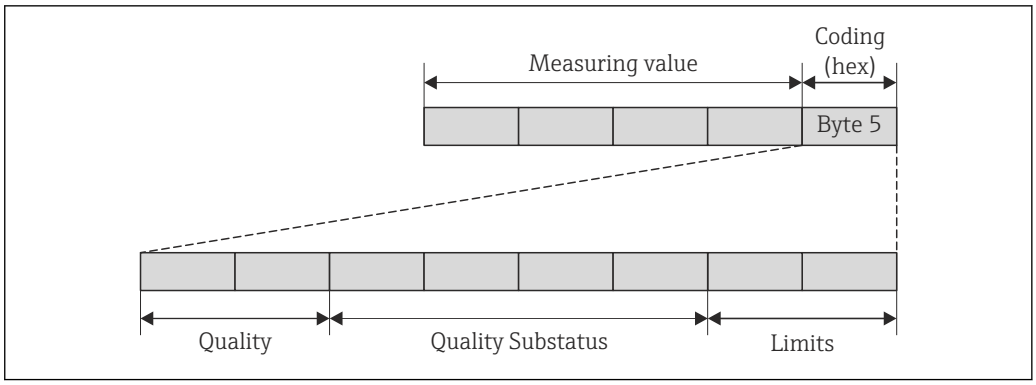

33 *Structure of the coding byte*

The content of the coding byte depends on the configured failsafe mode in the particular function block. Depending on which failsafe mode has been configured, status information in accordance with PROFIBUS Profile Specification 3.02 is transmitted to the PROFIBUS Master (Class 1) via the coding byte.

Determining the measured value status and device status via the diagnostic behavior

When the diagnostic behavior is assigned, this also changes the measured value status and device status for the diagnostic information. The measured value status and device status depend on the choice of diagnostic behavior and the group in which the diagnostic information is located. The measured value status and device status are firmly assigned to the particular diagnostic behavior and cannot be changed individually.

The diagnostic information is grouped as follows:
- Diagnostic information pertaining to the sensor: diagnostic number 000 to 199 (→ 109)
- Diagnostic information pertaining to the electronics: diagnostic number 200 to 399 (→ 110)
- Diagnostic information pertaining to the configuration: diagnostic number 400 to 599 (→ 110)
- Diagnostic information pertaining to the process: diagnostic number 800 to 999 (→ 110)

Depending on the group in which diagnostic information is located, the following measured value status and device status are firmly assigned to the particular diagnostic behavior:

Diagnostic information pertaining to the sensor (diagnostic no.: 000 to 199)

Diagnostic behavior (configurable)	Measured value status (fixed assignment)				Device diagnostics (fixed assignment)
	Quality	Quality Substatus	Coding (hex)	Category (NE107)	
Alarm	BAD	Maintenance alarm	0x24 to 0x27	F (Failure)	Maintenance alarm
Warning	GOOD	Maintenance demanded	0xA8 to 0xAB	M (Maintenance)	Maintenance demanded
Logbook entry only	GOOD	ok	0x80 to 0x8E	–	–
Off					

Diagnostic information pertaining to the electronics (diagnostic no.: 200 to 399)

Diagnostic behavior (configurable)	Measured value status (fixed assignment)				Device diagnostics (fixed assignment)
	Quality	Quality Substatus	Coding (hex)	Category (NE107)	
Alarm	BAD	Maintenance alarm	0x24 to 0x27	F (Failure)	Maintenance alarm
Warning					
Logbook entry only	GOOD	ok	0x80 to 0x8E	–	–
Off					

Diagnostic information pertaining to the configuration (diagnostic no.: 400 to 599)

Diagnostic behavior (configurable)	Measured value status (fixed assignment)				Device diagnostics (fixed assignment)
	Quality	Quality Substatus	Coding (hex)	Category (NE107)	
Alarm	BAD	Process related	0x28 to 0x2B	F (Failure)	Invalid process condition
Warning	UNCERTAIN	Process related	0x78 to 0x7B	S (Out of specification)	Invalid process condition
Logbook entry only	GOOD	ok	0x80 to 0x8E	–	–
Off					

Diagnostic information pertaining to the process (diagnostic no.: 800 to 999)

Diagnostic behavior (configurable)	Measured value status (fixed assignment)				Device diagnostics (fixed assignment)
	Quality	Quality Substatus	Coding (hex)	Category (NE107)	
Alarm	BAD	Process related	0x28 to 0x2B	F (Failure)	Invalid process condition
Warning	UNCERTAIN	Process related	0x78 to 0x7B	S (Out of specification)	Invalid process condition
Logbook entry only	GOOD	ok	0x80 to 0x8E	–	–
Off					

12.7 Overview of diagnostic information

The amount of diagnostic information and the number of measured variables affected increase if the measuring device has one or more application packages.

In the case of some items of diagnostic information, the diagnostic behavior can be changed. Adapt the diagnostic information (→ 108)

Diagnostic number	Short text	Remedy instructions	Status signal [from the factory]	Diagnostic behavior [from the factory]
Diagnostic of sensor				
004	Sensor	1. Change sensor 2. Contact service	S	Alarm

Diagnostic number	Short text	Remedy instructions	Status signal [from the factory]	Diagnostic behavior [from the factory]
022	Sensor temperature	1.Change main electronic module 2.Change sensor	F	Alarm
043	Sensor short circuit	1.Check sensor and cable 2.Change sensor or cable	S	Warning
062	Sensor connection	1.Check sensor connections 2.Contact service	F	Alarm
082	Data storage	1. Check module connections 2. Contact service	F	Alarm
083	Memory content	1. Restart device 2. Contact service	F	Alarm
190	Special event 1	Contact service	F	Alarm
Diagnostic of electronic				
201	Device failure	1. Restart device 2. Contact service	F	Alarm
222	Electronic drift	Change main electronic module	F	Alarm
242	Software incompatible	1. Check software 2. Flash or change main electronics module	F	Alarm
252	Modules incompatible	1. Check electronic modules 2. Change electronic modules	F	Alarm [1)]
262	Module connection	1. Check module connections 2. Change main electronics	F	Alarm
270	Main electronic failure	Change main electronic module	F	Alarm
271	Main electronic failure	1. Restart device 2. Change main electronic module	F	Alarm
272	Main electronic failure	1. Restart device 2. Contact service	F	Alarm
273	Main electronic failure	Change electronic	F	Alarm
281	Electronic initialization	Firmware update active, please wait!	F	Alarm
283	Memory content	1. Reset device 2. Contact service	F	Alarm
302	Device verification active	Device verification active, please wait.	C	Warning [1)]
311	Electronic failure	1. Reset device 2. Contact service	F	Alarm
311	Electronic failure	1. Do not reset device 2. Contact service	M	Warning
322	Electronic drift	1.Perform verification manually 2.Change electronic	S	Warning
382	Data storage	1. Insert DAT module 2. Change DAT module	F	Alarm
383	Memory content	1. Restart device 2. Check or change DAT module 3. Contact service	F	Alarm
390	Special event 2	Contact service	F	Alarm
Diagnostic of configuration				
410	Data transfer	1. Check connection 2. Retry data transfer	F	Alarm
411	Up-/download active	Up-/download active, please wait	C	Warning

Diagnostic number	Short text	Remedy instructions	Status signal [from the factory]	Diagnostic behavior [from the factory]
437	Configuration incompatible	1. Restart device 2. Contact service	F	Alarm
438	Dataset	1. Check data set file 2. Check device configuration 3. Up- and download new configuration	M	Warning
453	Flow override	Deactivate flow override	C	Warning
482	Block in OOS	Set Block in AUTO mode	F	Alarm
484	Simulation failure mode	Deactivate simulation	C	Alarm
485	Simulation measured variable	Deactivate simulation	C	Warning
495	Simulation diagnostic event	Deactivate simulation	C	Warning
497	Simulation block output	Deactivate simulation	C	Warning
500	Electrode 1 potential exceeded	1. Check process cond. 2. Increase system pressure	F	Alarm
500	Electrode difference voltage too high	1. Check process cond. 2. Increase system pressure	F	Alarm
530	Electrode cleaning is running	1. Check process cond. 2. Increase system pressure	C	Warning
531	Empty pipe detection	Execute EPD adjustment	S	Warning [1)]
537	Configuration	1. Check IP addresses in network 2. Change IP address	F	Warning
590	Special event 3	Contact service	F	Alarm
Diagnostic of process				
832	Electronic temperature too high	Reduce ambient temperature	S	Warning [1)]
833	Electronic temperature too low	Increase ambient temperature	S	Warning [1)]
842	Process limit	Low flow cut off active! 1. Check low flow cut off configuration	S	Warning
862	Empty pipe	1. Check for gas in process 2. Adjust empty pipe detection	S	Warning [1)]
882	Input signal	1. Check input configuration 2. Check external device or process conditions	F	Alarm
937	EMC interference	Change main electronic module	S	Warning [1)]
938	EMC interference	1. Check ambient conditions regarding EMC influence 2. Change main electronic module	F	Alarm
990	Special event 4	Contact service	F	Alarm

1) Diagnostic status is changeable.

12.8 Pending diagnostic events

The **Diagnostics** menu allows the user to view the current diagnostic event and the previous diagnostic event separately.

To call up the measures to rectify a diagnostic event:
- Via local display (→ 105)
- Via Web browser (→ 107)
- Via "FieldCare" operating tool (→ 108)

Other pending diagnostic events can be displayed in the **Diagnostic list** submenu(→ 113)

Navigation
"Diagnostics" menu

Structure of the submenu

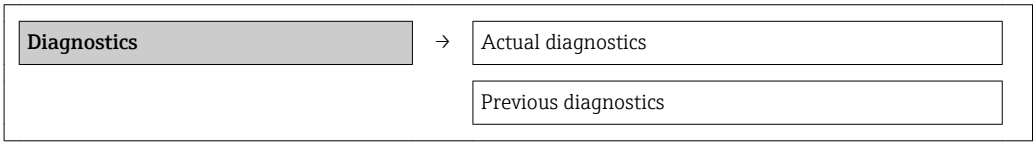

Parameter overview with brief description

Parameter	Prerequisite	Description	User interface	Factory setting
Actual diagnostics	1 diagnostic event has occurred.	Displays the current diagnostic event along with the diagnostic information. If two or more messages occur simultaneously, the message with the highest priority is shown on the display.	Symbol for diagnostic behavior, diagnostic code and short message.	–
Previous diagnostics	2 diagnostic events have already occurred.	Displays the diagnostic event that occurred prior to the current diagnostic event along with the diagnostic information.	Symbol for diagnostic behavior, diagnostic code and short message.	–

12.9 Diagnostic list

In the **Diagnostic list** submenu, up to 5 currently pending diagnostic events can be displayed along with the related diagnostic information. If more than 5 diagnostic events are pending, the events with the highest priority are shown on the display.

Navigation path
Diagnostics menu→**Diagnostic list** submenu

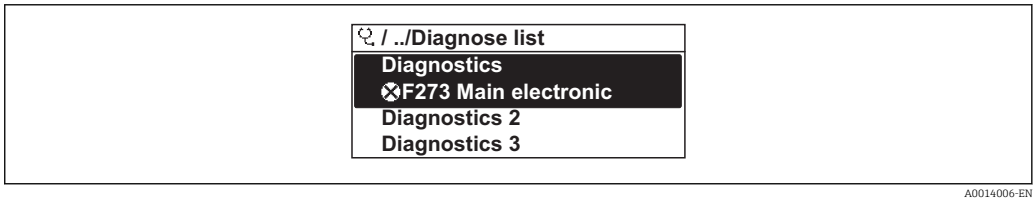

34 *Illustrated using the example of the local display*

To call up the measures to rectify a diagnostic event:
- Via local display (→ 105)
- Via Web browser (→ 107)
- Via "FieldCare" operating tool (→ 108)

12.10 Event logbook

12.10.1 Event history

A chronological overview of the event messages that have occurred is provided in the **Events list** submenu.

Navigation path
"Diagnostics" menu → Event logbook → Events list

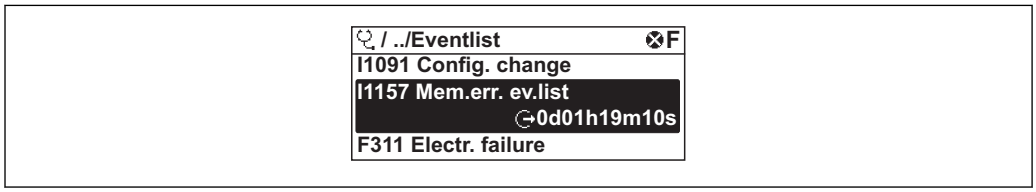

35 *Illustrated using the example of the local display*

To call up the measures to rectify a diagnostic event:
- Via local display (→ 105)
- Via Web browser (→ 107)
- Via "FieldCare" operating tool (→ 108)

For filtering the displayed event messages (→ 114)

12.10.2 Filtering the event logbook

Using the **Filter options** parameter, you can define which category of event messages is displayed in the **Events list** submenu.

Navigation path
"Diagnostics" menu → Event logbook → Filter options

Filter categories
- All
- Failure (F)
- Function check (C)
- Out of specification (S)
- Maintenance required (M)
- Information (I)

12.10.3 Overview of information events

Unlike a diagnostic event, an information event is displayed in the event logbook only and not in the diagnostic list.

Info number	Info name
I1000	--------(Device ok)
I1089	Power on
I1090	Configuration reset
I1091	Configuration changed

Info number	Info name
I1092	Trend data deleted
I1110	Write protection switch changed
I1137	Electronic changed
I1151	History reset
I1155	Reset electronic temperature
I1156	Memory error trend
I1157	Memory error event list
I1185	Display backup done
I1186	Restore via display done
I1187	Settings downloaded with display
I1188	Display data cleared
I1189	Backup compared
I1256	Display: access status changed
I1264	Safety sequence aborted
I1335	Firmware changed
I1351	Empty pipe detection adjustment failure
I1353	Empty pipe detection adjustment ok
I1361	Wrong web server login
I1397	Fieldbus: access status changed
I1398	CDI: access status changed
I1443	Coating thickness not determined
I1444	Device verification passed
I1445	Device verification failed
I1446	Device verification active
I1457	Failed:Measured error verification
I1459	Failed: I/O module verification
I1461	Failed: Sensor verification
I1462	Failed:Sensor electronic module verific.

12.11 Resetting the measuring device

Using the **Device reset** parameter it is possible to reset the entire device configuration or some of the configuration to a defined state.

Navigation
"Setup" menu → Advanced setup → Administration → Device reset

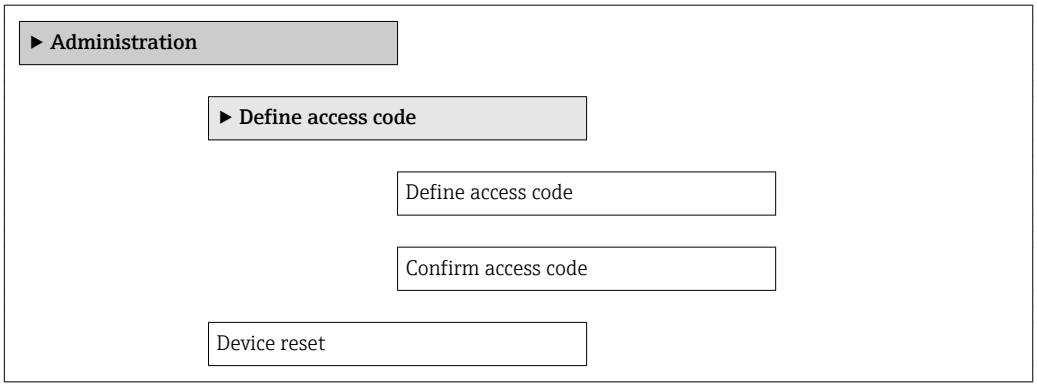

Parameter overview with brief description

Parameter	Description	Selection	Factory setting
Device reset	Restart or reset device manually.	▪ Cancel ▪ To delivery settings ▪ Restart device	Cancel

12.11.1 Function scope of "Device reset" parameter

Options	Description
Cancel	No action is executed and the user exits the parameter.
To delivery settings	Every parameter for which a customer-specific default setting was ordered is reset to this customer-specific value. All other parameters are reset to the factory setting.
Restart device	The restart resets every parameter whose data are in the volatile memory (RAM) to the factory setting (e.g. measured value data). The device configuration remains unchanged.
History reset	Every parameter is reset to its factory setting.

12.12 Device information

The **Device information** submenu contains all the parameters that display different information for identifying the device.

Navigation
"Diagnostics" menu → Device information

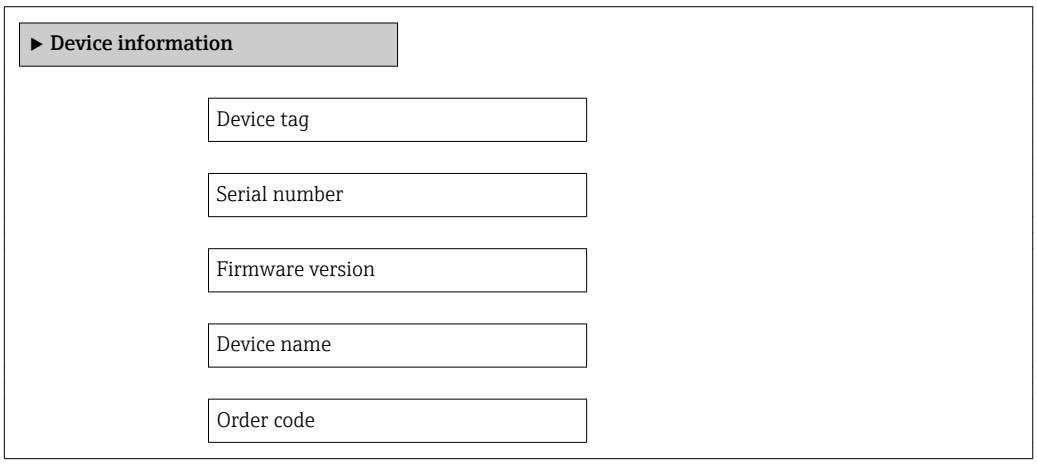

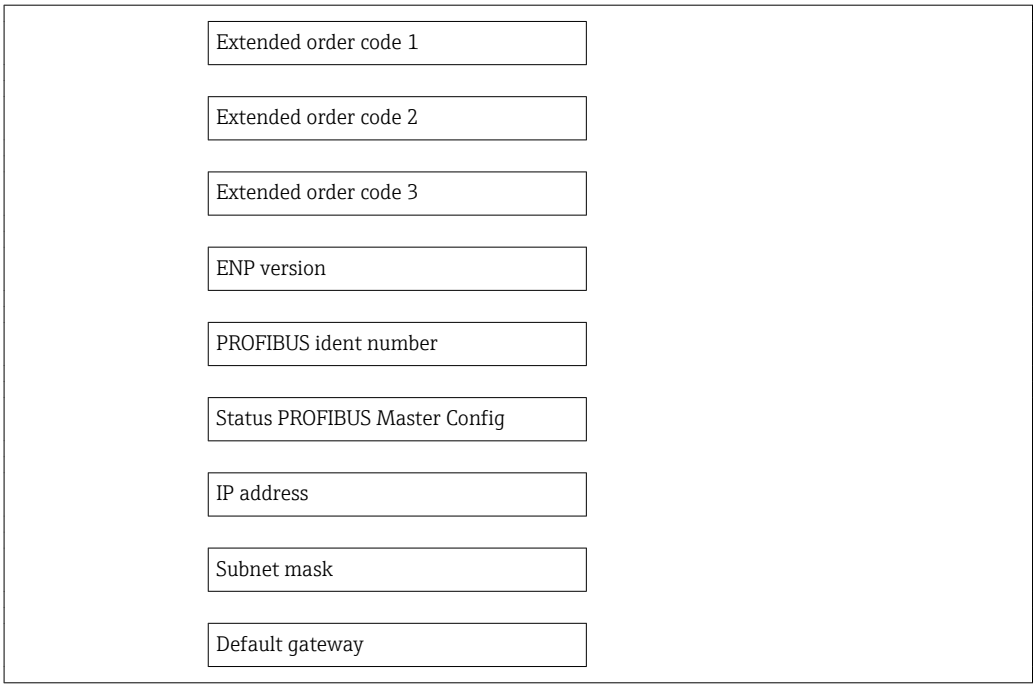

Parameter overview with brief description

Parameter	Description	User interface	Factory setting
Device tag	Enter the name for the measuring point.	Max. 32 characters, such as letters, numbers or special characters (e.g. @, %, /)	Promag 400 DP
Serial number	Displays the serial number of the measuring device.	Max. 11-digit character string comprising letters and numbers.	79AFFF16000
Firmware version	Displays the device firmware version installed.	Character string with the following format: xx.yy.zz	01.00
Device name	Displays the name of the transmitter.	Character string composed of letters, numbers and certain punctuation marks.	Promag 400 DP
Order code	Displays the device order code.	Character string composed of letters, numbers and certain punctuation marks	–
Extended order code 1	Displays the 1st part of the extended order code.	Character string	–
Extended order code 2	Displays the 2nd part of the extended order code.	Character string	-
Extended order code 3	Displays the 3rd part of the extended order code.	Character string	-
ENP version	Displays the version of the electronic nameplate.	Character string in the format xx.yy.zz	2.02.00
PROFIBUS ident number		0 to 65 535	5 474
Status PROFIBUS Master Config		▪ Active ▪ Not active	Not active
IP address	Displays the IP address of the Web server of the measuring device.	4 octet: 0 to 255 (in the particular octet)	192.168.1.212

Parameter	Description	User interface	Factory setting
Subnet mask	Displays the subnet mask.	4 octet: 0 to 255 (in the particular octet)	255.255.255.0
Default gateway	Displays the default gateway.	4 octet: 0 to 255 (in the particular octet)	0.0.0.0

12.13 Firmware history

Release date	Firmware version	Order code for "Firmware version"	Firmware changes	Documentation type	Documentation
05.2014	01.00.00	Option **78**	Original firmware	Operating Instructions	BA01234D/06/EN/01.14

Flashing the firmware to the current version or to the previous version is possible via the service interface (CDI) (→ 150).

For the compatibility of the firmware version with the previous version, the installed device description files and operating tools, observe the information about the device in the "Manufacturer's information" document.

The manufacturer's information is available:
- In the Download Area of the Endress+Hauser Internet site: www.endress.com → Download
- Specify the following details:
  - Text search: Manufacturer's information
  - Search range: documentation

13 Maintenance

13.1 Maintenance tasks

No special maintenance work is required.

13.1.1 Exterior cleaning

When cleaning the exterior of measuring devices, always use cleaning agents that do not attack the surface of the housing or the seals.

⚠ WARNING

Cleaning agents can damage the plastic transmitter housing!

- ▶ Do not use high-pressure steam.
- ▶ Only use the permitted cleaning agents specified.

Permitted cleaning agents for the plastic transmitter housing

- Commercially available household cleaners
- Methyl alcohol or isopropyl alcohol
- Mild soap solutions

13.1.2 Interior cleaning

No interior cleaning is planned for the device.

13.1.3 Replacing seals

The sensor's seals (particularly aseptic molded seals) must be replaced periodically.

The interval between changes depends on the frequency of the cleaning cycles, the cleaning temperature and the medium temperature.

Replacement seals (accessory) (→ 154)

13.2 Measuring and test equipment

Endress+Hauser offers a wide variety of measuring and test equipment, such as W@M or device tests.

Your Endress+Hauser Sales Center can provide detailed information on the services.

For a list of some of the measuring and test equipment, refer to the "Accessories" chapter of the "Technical Information" document for the device.

13.3 Endress+Hauser services

Endress+Hauser offers a wide variety of services for maintenance such as recalibration, maintenance service or device tests.

Your Endress+Hauser Sales Center can provide detailed information on the services.

14 Repair

14.1 General notes

Repair and conversion concept
The Endress+Hauser repair and conversion concept provides for the following:
- The measuring devices have a modular design.
- Spare parts are grouped into logical kits with the associated Installation Instructions.
- Repairs are carried out by Endress+Hauser Service or by correspondingly trained customers.
- Certified devices can be converted into other certified devices by Endress+Hauser Service or at the factory only.

Notes for repair and conversion
For repair and modification of a measuring device, observe the following notes:
- Use only original Endress+Hauser spare parts.
- Carry out the repair according to the Installation Instructions.
- Observe the applicable standards, federal/national regulations, Ex documentation (XA) and certificates.
- Document every repair and each conversion and enter them into the *W@M* life cycle management database.

14.2 Spare parts

Measuring device serial number:
- Is located on the nameplate of the device.
- Can be read out via the **Serial number** parameter in the **Device information** submenu (→ 116).

14.3 Endress+Hauser services

Contact your Endress+Hauser Sales Center for information on services and spare parts.

14.4 Return

The measuring device must be returned if it is need of repair or a factory calibration, or if the wrong measuring device has been delivered or ordered. Legal specifications require Endress+Hauser, as an ISO-certified company, to follow certain procedures when handling products that are in contact with the medium.

To ensure safe, swift and professional device returns, please refer to the procedure and conditions for returning devices provided on the Endress+Hauser website at
http://www.endress.com/support/return-material

14.5 Disposal

14.5.1 Removing the measuring device

1. Switch off the device.
2. **WARNING!** Danger to persons from process conditions. Beware of hazardous process conditions such as pressure in the measuring device, high temperatures or aggressive fluids.

Carry out the mounting and connection steps from the chapters "Mounting the measuring device" and "Connecting the measuring device" in the logically reverse sequence. Observe the safety instructions.

14.5.2 Disposing of the measuring device

⚠ WARNING

Danger to personnel and environment from fluids that are hazardous to health.

- ▶ Ensure that the measuring device and all cavities are free of fluid residues that are hazardous to health or the environment, e.g. substances that have permeated into crevices or diffused through plastic.

Observe the following notes during disposal:

- Observe valid federal/national regulations.
- Ensure proper separation and reuse of the device components.

15 Accessories

Various accessories, which can be ordered with the device or subsequently from Endress +Hauser, are available for the device. Detailed information on the order code in question is available from your local Endress+Hauser sales center or on the product page of the Endress+Hauser website: www.endress.com.

15.1 Device-specific accessories

15.1.1 For the transmitter

Accessories	Description
Display protection	Is used to protect the display against impact or scoring from sand in desert areas. For details, see Special Documentation SD00333F
Connecting cable for remote version	Coil current and electrode cables, various lengths, reinforced cables available on request.
Ground cable	Set, consisting of two ground cables for potential equalization.
Post mounting kit	Post mounting kit for transmitter.
Compact → remote conversion kit	For converting a compact device version to a remote device version.
Promag 50/53 → Promag 400 conversion kit	For converting a Promag with transmitter 50/53 to a Promag 400.

15.1.2 For the sensor

Accessories	Description
Ground disks	Are used to ground the fluid in lined measuring tubes to ensure proper measurement. For details, see Installation Instructions EA00070D

15.2 Service-specific accessories

Accessories	Description
Applicator	Software for selecting and sizing Endress+Hauser measuring devices: ▪ Calculation of all the necessary data for identifying the optimum flowmeter: e.g. nominal diameter, pressure loss, accuracy or process connections. ▪ Graphic illustration of the calculation results Administration, documentation and access to all project-related data and parameters throughout the entire life cycle of a project. Applicator is available: ▪ Via the Internet: https://wapps.endress.com/applicator ▪ On CD-ROM for local PC installation.

W@M	Life cycle management for your plant W@M supports you with a wide range of software applications over the entire process: from planning and procurement, to the installation, commissioning and operation of the measuring devices. All the relevant device information, such as the device status, spare parts and device-specific documentation, is available for every device over the entire life cycle. The application already contains the data of your Endress+Hauser device. Endress +Hauser also takes care of maintaining and updating the data records. W@M is available: ▪ Via the Internet: www.endress.com/lifecyclemanagement ▪ On CD-ROM for local PC installation.
FieldCare	FDT-based plant asset management tool from Endress+Hauser. It can configure all smart field units in your system and helps you manage them. By using the status information, it is also a simple but effective way of checking their status and condition. For details, see Operating Instructions BA00027S and BA00059S

15.3 System components

Accessories	Description
Memograph M graphic display recorder	The Memograph M graphic display recorder provides information on all relevant measured variables. Measured values are recorded correctly, limit values are monitored and measuring points analyzed. The data are stored in the 256 MB internal memory and also on a SD card or USB stick. For details, see "Technical Information" TI00133R and Operating Instructions BA00247R

16 Technical data

16.1 Application

The measuring device described in these Instructions is intended only for flow measurement of liquids with a minimum conductivity of 5 µS/cm.

Depending on the version ordered, the measuring device can also measure potentially explosive, flammable, poisonous and oxidizing media.

To ensure that the device remains in proper operating condition for its service life, use the measuring device only for media against which the process-wetted materials are adequately resistant.

16.2 Function and system design

Measuring principle

Electromagnetic flow measurement on the basis of *Faraday's law of magnetic induction*.

Measuring system

The device consists of a transmitter and a sensor.

Two device versions are available:
- Compact version - the transmitter and sensor form a mechanical unit.
- Remote version – the transmitter and sensor are mounted separately from one another.

For information on the structure of the device (→ 12)

16.3 Input

Measured variable

Direct measured variables

- Volume flow (proportional to induced voltage)
- Electrical conductivity

In custody transfer: only volume flow

Calculated measured variables

Mass flow

Measuring range

Typically v = 0.01 to 10 m/s (0.03 to 33 ft/s) with the specified accuracy

Electrical conductivity: 5 to 10 000 µS/cm

Flow characteristic values in SI units

Nominal diameter		Recommended flow	Factory settings		
		min./max. full scale value (v ~ 0.3/10 m/s)	Full scale value current output (v ~ 2.5 m/s)	Pulse value (~ 2 pulse/s)	Low flow cut off (v ~ 0.04 m/s)
[mm]	[in]	[m³/h]	[m³/h]	[m³]	[m³/h]
25	1	9 to 300 dm³/min	75 dm³/min	0.5 dm³	1 dm³/min
32	–	15 to 500 dm³/min	125 dm³/min	1 dm³	2 dm³/min
40	1 ½	25 to 700 dm³/min	200 dm³/min	1.5 dm³	3 dm³/min

Nominal diameter		Recommended flow	Factory settings		
		min./max. full scale value (v ~ 0.3/10 m/s)	Full scale value current output (v ~ 2.5 m/s)	Pulse value (~ 2 pulse/s)	Low flow cut off (v ~ 0.04 m/s)
[mm]	[in]	[m³/h]	[m³/h]	[m³]	[m³/h]
50	2	35 to 1 100 dm³/min	300 dm³/min	2.5 dm³	5 dm³/min
65	–	60 to 2 000 dm³/min	500 dm³/min	5 dm³	8 dm³/min
80	3	90 to 3 000 dm³/min	750 dm³/min	5 dm³	12 dm³/min
100	4	145 to 4 700 dm³/min	1 200 dm³/min	10 dm³	20 dm³/min
125	–	220 to 7 500 dm³/min	1 850 dm³/min	15 dm³	30 dm³/min
150	6	20 to 600	150	0.025	2.5
200	8	35 to 1 100	300	0.05	5
250	10	55 to 1 700	500	0.05	7.5
300	12	80 to 2 400	750	0.1	10
350	14	110 to 3 300	1 000	0.1	15
375	15	140 to 4 200	1 200	0.15	20
400	16	140 to 4 200	1 200	0.15	20
450	18	180 to 5 400	1 500	0.25	25
500	20	220 to 6 600	2 000	0.25	30
600	24	310 to 9 600	2 500	0.3	40
700	28	420 to 13 500	3 500	0.5	50
750	30	480 to 15 000	4 000	0.5	60
800	32	550 to 18 000	4 500	0.75	75
900	36	690 to 22 500	6 000	0.75	100
1 000	40	850 to 28 000	7 000	1	125
–	42	950 to 30 000	8 000	1	125
1 200	48	1 250 to 40 000	10 000	1.5	150
–	54	1 550 to 50 000	13 000	1.5	200
1 400	–	1 700 to 55 000	14 000	2	225
–	60	1 950 to 60 000	16 000	2	250
1 600	–	2 200 to 70 000	18 000	2.5	300
–	66	2 500 to 80 000	20 500	2.5	325
1 800	72	2 800 to 90 000	23 000	3	350
–	78	3 300 to 100 000	28 500	3.5	450
2 000	–	3 400 to 110 000	28 500	3.5	450

Flow characteristic values in US units

Nominal diameter		Recommended flow	Factory settings		
		min./max. full scale value (v ~ 0.3/10 m/s)	Full scale value current output (v ~ 2.5 m/s)	Pulse value (~ 2 pulse/s)	Low flow cut off (v ~ 0.04 m/s)
[in]	[mm]	[gal/min]	[gal/min]	[gal]	[gal/min]
1	25	2.5 to 80	18	0.2	0.25
–	32	4 to 130	30	0.2	0.5

Nominal diameter		Recommended flow	Factory settings		
		min./max. full scale value (v ~ 0.3/10 m/s)	Full scale value current output (v ~ 2.5 m/s)	Pulse value (~ 2 pulse/s)	Low flow cut off (v ~ 0.04 m/s)
[in]	[mm]	[gal/min]	[gal/min]	[gal]	[gal/min]
1 ½	40	7 to 190	50	0.5	0.75
2	50	10 to 300	75	0.5	1.25
–	65	16 to 500	130	1	2
3	80	24 to 800	200	2	2.5
4	100	40 to 1250	300	2	4
–	125	60 to 1950	450	5	7
6	150	90 to 2650	600	5	12
8	200	155 to 4850	1200	10	15
10	250	250 to 7500	1500	15	30
12	300	350 to 10600	2400	25	45
14	350	500 to 15000	3600	30	60
15	375	600 to 19000	4800	50	60
16	400	600 to 19000	4800	50	60
18	450	800 to 24000	6000	50	90
20	500	1000 to 30000	7500	75	120
24	600	1400 to 44000	10500	100	180
28	700	1900 to 60000	13500	125	210
30	750	2150 to 67000	16500	150	270
32	800	2450 to 80000	19500	200	300
36	900	3100 to 100000	24000	225	360
40	1000	3800 to 125000	30000	250	480
42	–	4200 to 135000	33000	250	600
48	1200	5500 to 175000	42000	400	600
54	–	9 to 300 Mgal/d	75 Mgal/d	0.0005 Mgal/d	1.3 Mgal/d
–	1400	10 to 340 Mgal/d	85 Mgal/d	0.0005 Mgal/d	1.3 Mgal/d
60	–	12 to 380 Mgal/d	95 Mgal/d	0.0005 Mgal/d	1.3 Mgal/d
–	1600	13 to 450 Mgal/d	110 Mgal/d	0.0008 Mgal/d	1.7 Mgal/d
66	–	14 to 500 Mgal/d	120 Mgal/d	0.0008 Mgal/d	2.2 Mgal/d
72	1800	16 to 570 Mgal/d	140 Mgal/d	0.0008 Mgal/d	2.6 Mgal/d
78	–	18 to 650 Mgal/d	175 Mgal/d	0.0010 Mgal/d	3.0 Mgal/d
–	2000	20 to 700 Mgal/d	175 Mgal/d	0.0010 Mgal/d	2.9 Mgal/d

Recommended measuring range

"Flow limit" section (→ 133)

For custody transfer, the applicable approval determines the permitted measuring range.

Operable flow range Over 1000 : 1

In custody transfer:
- 160 : 1 for DN 25 to 500 (1 to 20")
- 100 : 1 for DN 600 to 800 (24 to 32")

Further details are laid down by the applicable approval.

Input signal

External measured values

Various pressure transmitters and temperature measuring devices can be ordered from Endress+Hauser: see "Accessories" section (→ 123)

It is recommended to read in external measured values to calculate the following measured variables:
Corrected volume flow

Fieldbus

The measured values are written from the automation system to the measuring device via PROFIBUS DP.

16.4 Output

Output signal

PROFIBUS DP

Signal encoding	NRZ code
Data transfer	9.6 kBaud...12 MBaud

Signal on alarm

Depending on the interface, failure information is displayed as follows:

PROFIBUS DP

Status and alarm messages	Diagnostics in accordance with PROFIBUS PA Profile 3.02

Local display

Plain text display	With information on cause and remedial measures
Backlight	Red backlighting indicates a device error.

Status signal as per NAMUR recommendation NE 107

Operating tool

- Via digital communication:
  PROFIBUS DP
- Via service interface

Plain text display	With information on cause and remedial measures

Low flow cut off

The switch points for low flow cut off are user-selectable.

Galvanic isolation

The following connections are galvanically isolated from each other:
- Outputs
- Power supply

Protocol-specific data

PROFIBUS DP

Manufacturer ID	0x11
Ident number	0x1562
Profile version	3.02
Device description files (GSD, DTM, DD)	Information and files under: ▪ www.endress.com ▪ www.profibus.org
Output values (from measuring device to automation system)	**Analog input 1 to 4** ▪ Mass flow ▪ Volume flow ▪ Flow velocity ▪ Conductivity ▪ Electronic temperature **Digital input 1 to 2** ▪ Empty pipe detection ▪ Low flow cut off ▪ Verification status **Totalizer 1 to 3** ▪ Mass flow ▪ Volume flow
Input values (from automation system to measuring device)	**Analog output 1 (fixed assignment)** External density **Digital output 1 to 2 (fixed assignment)** ▪ Digital output 1: switch positive zero return on/off ▪ Digital output 2: start verification **Totalizer 1 to 3** ▪ Totalize ▪ Reset and hold ▪ Preset and hold ▪ Stop ▪ Operating mode configuration: – Net flow total – Forward flow total – Reverse flow total
Supported functions	▪ Identification & Maintenance Simplest device identification on the part of the control system and nameplate ▪ PROFIBUS upload/download Reading and writing parameters is up to ten times faster with PROFIBUS upload/download ▪ Condensed status Simplest and self-explanatory diagnostic information by categorizing diagnostic messages that occur
Configuration of the device address	▪ DIP switches on the I/O electronics module ▪ Via operating tools (e.g. FieldCare)

16.5 Power supply

Terminal assignment

(→ 37)

Supply voltage

Transmitter

Order code for "Power supply"	Terminal voltage	Frequency range
Option **L**	AC100 to 240 V	50/ 60 Hz, ±4 Hz
	AC/DC24 V	50/ 60 Hz, ±4 Hz

Power consumption

Order code for "Output"	Maximum power consumption
Option **L**: PROFIBUS DP	30 VA/8 W

Current consumption

Transmitter

Order code for "Power supply"	Maximum Current consumption	Maximum switch-on current
Option **L**: AC 100 to 240 V	145 mA	25 A (< 5 ms)
Option **L**: AC/DC 24 V	350 mA	27 A (< 5 ms)

Power supply failure

- Totalizers stop at the last value measured.
- Configuration is retained in the plug-in memory (HistoROM DAT).
- Error messages (incl. total operated hours) are stored.

Electrical connection

(→ 40)

Potential equalization

(→ 43)

Terminals

Transmitter

- Supply voltage cable: plug-in spring terminals for wire cross-sections 0.5 to 2.5 mm² (20 to 14 AWG)
- Signal cable: plug-in spring terminals for wire cross-sections 0.5 to 2.5 mm² (20 to 14 AWG)
- Electrode cable: spring terminals for wire cross-sections 0.5 to 2.5 mm² (20 to 14 AWG)
- Coil current cable: spring terminals for wire cross-sections 0.5 to 2.5 mm² (20 to 14 AWG)

Sensor connection housing

Spring terminals for wire cross-sections0.5 to 2.5 mm² (20 to 14 AWG)

Cable entries

Cable entry thread

- M20 x 1.5
- Via adapter:
  - NPT ½"
  - G ½"

Cable gland

- For standard cable: M20 × 1.5 with cable ⌀6 to 12 mm (0.24 to 0.47 in)
- For reinforced cable: M20 × 1.5 with cable ⌀9.5 to 16 mm (0.37 to 0.63 in)

If metal cable entries are used, use a grounding plate.

Cable specification

(→ 35)

16.6 Performance characteristics

Reference operating conditions

In accordance with DIN EN 29104
- Fluid temperature: +28±2 °C (+82±4 °F)
- Ambient temperature range: +22±2 °C (+72±4 °F)
- Warm-up period:30 min

Installation
- Inlet run > 10 × DN
- Outlet run > 5 × DN
- Sensor and transmitter grounded.
- The sensor is centered in the pipe.

No special requirements must be observed at the inlet and outlet runs to keep within the in-service maximum permissible errors for custody transfer.

Maximum measured error

Error limits under reference operating conditions

o.r. = of reading

Volume flow
- ±0.5 % o.r. ± 1 mm/s (0.04 in/s)
- Optional: ±0.2 % o.r. ± 2 mm/s (0.08 in/s)

Fluctuations in the supply voltage do not have any effect within the specified range.

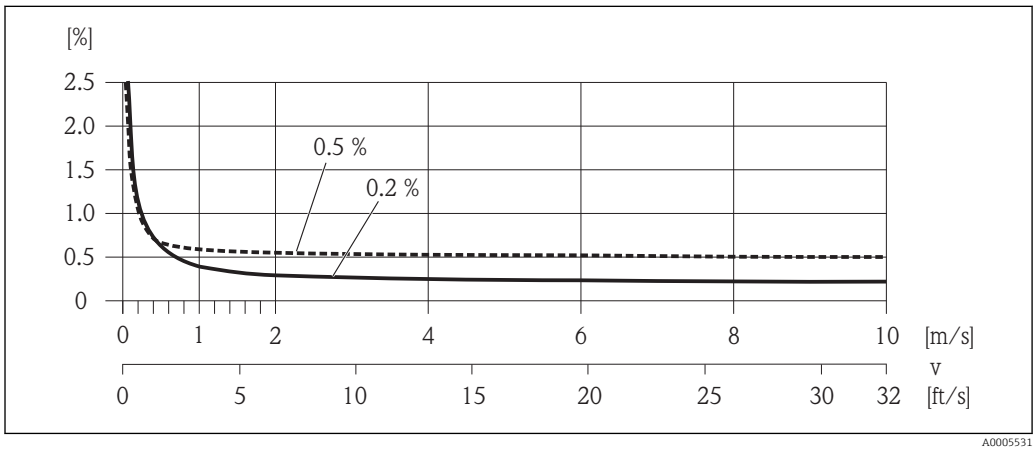

36 *Maximum measured error in % o.r.*

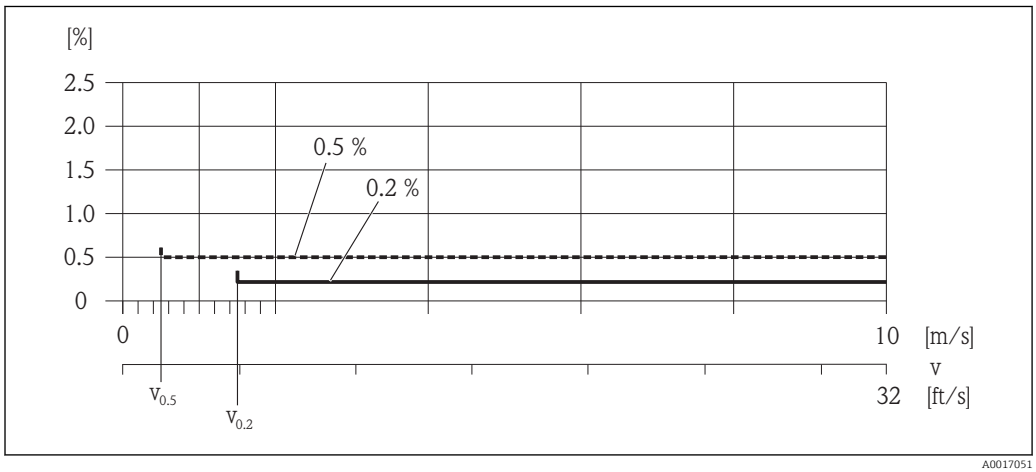

37 *Flat Spec in % o.r.*

Flat Spec flow values0.5 %

Nominal diameter		$v_{0.5}$	
[mm]	[in]	[m/s]	[ft/s]
25 to 600	1 to 24	0.5	1.64

Flat Spec flow values0.2 %

Nominal diameter		$v_{0.2}$	
[mm]	[in]	[m/s]	[ft/s]
25 to 600	1 to 24	1.5	4.92

Electrical conductivity
Max. measured error not specified.

Accuracy of outputs

o.r. = of reading

The outputs have the following base accuracy specifications.

Current output

Accuracy	Max. ±5 µA

Pulse/frequency output

Accuracy	Max. ±50 ppm o.r. (across the complete ambient temperature range)

Repeatability

o.r. = of reading

Volume flow
Max. ±0.1 % o.r. ± 0.5 mm/s (0.02 in/s)

Electrical conductivity
Max. ±5 % o.r.

16.7 Installation

"Mounting requirements" (→ 19)

16.8 Environment

Ambient temperature range

(→ 21)

Temperature tables

Observe the interdependencies between the permitted ambient and fluid temperatures when operating the device in hazardous areas.

For detailed information on the temperature tables, see the separate document entitled "Safety Instructions" (XA) for the device.

Storage temperature	The storage temperature corresponds to the operating temperature range of the measuring transmitter and the appropriate measuring sensors. ▪ Protect the measuring device against direct sunlight during storage in order to avoid unacceptably high surface temperatures. ▪ Select a storage location where moisture cannot collect in the measuring device as fungus or bacteria infestation can damage the liner. ▪ If protection caps or protective covers are mounted these should never be removed before installing the measuring device.
Degree of protection	**Transmitter** ▪ As standard: IP66/67, type 4X enclosure ▪ When housing is open: IP20, type 1 enclosure **Sensor** ▪ As standard: IP66/67, type 4X enclosure ▪ Optionally available for remote version: – IP66/67, type 4X enclosure; fully welded, with protective varnish EN ISO 12944 C5-M. Suitable for use in corrosive atmospheres. – IP68, type 6P enclosure; fully welded, with protective varnish as per EN ISO 12944 C5-M. Suitable for permanent immersion in water ≤3 m (10 ft) or 48 hours at depths ≤10 m (30 ft). – IP68, type 6P enclosure; fully welded, with protective varnish as per EN ISO 12944 Im1/Im2/Im3. Suitable for permanent immersion in saline water ≤3 m (10 ft) or 48 hours at depths ≤10 m (30 ft) or in buried applications.
Shock resistance	**Compact version** 6 ms 30 g, according to IEC 60068-2-27 **Remote version** ▪ Transmitter: 6 ms 30 g, according to IEC 60068-2-27 ▪ Sensor: 6 ms 50 g, according to IEC 60068-2-27
Vibration resistance	**Compact version** ▪ Vibration sinusoidal, 1 g peak, according to IEC 60068-2-6 ▪ Vibration broad-band random, 1.54 g rms, according to IEC 60068-2-64 **Remote version** ▪ Transmitter – Vibration sinusoidal, 1 g peak, according to IEC 60068-2-6 – Vibration broad-band random, 1.54 g rms, according to IEC 60068-2-64 ▪ Sensor: – Vibration sinusoidal, 2 g peak, according to IEC 60068-2-6 – Vibration broad-band random, 2.70 g rms, according to IEC 60068-2-64
Mechanical load	▪ Protect the transmitter housing against mechanical effects, such as shock or impact; the use of the remote version is sometimes preferable. ▪ Never use the transmitter housing as a ladder or climbing aid.
Electromagnetic compatibility (EMC)	▪ As per IEC/EN 61326 and NAMUR Recommendation 21 (NE 21) ▪ Complies with emission limits for industry as per EN 55011 (Class A) ▪ Device version with PROFIBUS DP: Complies with emission limits for industry as per EN 50170 Volume 2, IEC 61784 The following applies for PROFIBUS DP: If baud rates > 1.5 MBaud an EMC cable entry must be used and the cable shield must continue as far as the terminal wherever possible.

For details refer to the Declaration of Conformity.

16.9 Process

Medium temperature range

- 0 to +80 °C (+32 to +176 °F) for hard rubber, DN 50 to 2000 (2 to 78")
- −20 to +50 °C (−4 to +122 °F) for polyurethane, DN 25 to 1200 (1 to 48")

Conductivity

≥ 5 µS/cm for liquids in general

Note that in the case of the remote version, the requisite minimum conductivity also depends on the cable length .

Pressure-temperature ratings

An overview of the pressure-temperature ratings for the process connections is provided in the "Technical Information" document

Pressure tightness

Liner: hard rubber

Nominal diameter		Limit values for absolute pressure in [mbar] ([psi]) for fluid temperatures:		
[mm]	[in]	+25 °C (+77 °F)	+50 °C (+122 °F)	+80 °C (+176 °F)
50...2000	2...78	0 (0)	0 (0)	0 (0)

Liner: polyurethane

Nominal diameter		Limit values for absolute pressure in [mbar] ([psi]) for fluid temperatures:	
[mm]	[in]	+25 °C (+77 °F)	+50 °C (+122 °F)
25...1200	1...48	0 (0)	0 (0)

Flow limit

The diameter of the pipe and the flow rate determine the nominal diameter of the sensor. The optimum velocity of flow is between 2 to 3 m/s (6.56 to 9.84 ft/s). Also match the velocity of flow (v) to the physical properties of the fluid:

- v < 2 m/s (6.56 ft/s): for abrasive fluids (e.g. potter's clay, lime milk, ore slurry)
- v > 2 m/s (6.56 ft/s): for fluids producing buildup (e.g. wastewater sludges)

A necessary increase in the flow velocity can be achieved by reducing the sensor nominal diameter.

For an overview of the measuring range full scale values, see the "Measuring range" section

For custody transfer, the applicable approval determines the permitted measuring range.

Pressure loss

- No pressure loss occurs if the sensor is installed in a pipe with the same nominal diameter.
- Pressure losses for configurations incorporating adapters according to DIN EN 545 (→ 22)

System pressure

(→ 21)

Vibrations

(→ 22)

16.10 Mechanical construction

Design, dimensions

For the dimensions and installation lengths of the device, see the "Technical Information" document, "Mechanical construction" section

Weight

Compact version

Weight data:
- Including the transmitter
  - Order code for *"Housing"*, option M, Q: 1.3 kg (2.9 lbs)
  - Order code for *"Housing"*, option A, R: 2.0 kg (4.4 lbs)
- Excluding packaging material

Weight in SI units

Standard version

EN 1092-1 (DIN 2501)			
DN [mm]	Pressure rating	Weight [kg]	
		Order code for "Housing", option M, Q Polycarbonate plastic	Order code for "Housing", option A, R Aluminum, AlSi10Mg, coated
25	PN 40	5	.7
32	PN 40	6	6.7
40	PN 40	8	8.7
50	PN 40	9	9.7
65	PN 16	10	10.7
80	PN 16	12	12.7
100	PN 16	14	14.7
125	PN 16	20	20.7
150	PN 16	24	24.7
200	PN 10	43	43.7
250	PN 10	63	63.7
300	PN 10	68	68.7
350	PN 6	105	105.7
375	PN 6	120	120.7
400	PN 6	120	120.7
450	PN 6	161	161.7
500	PN 6	156	156.7
600	PN 6	208	208.7
700	PN 6	304	304.7
800	PN 6	357	357.7
900	PN 6	485	485.7
1000	PN 6	589	589.7
1200	PN 6	850	850.7
1400	PN 6	1300	1300.7
1600	PN 6	1700	1700.7

EN 1092-1 (DIN 2501)			
DN [mm]	Pressure rating	Weight [kg]	
		Order code for "Housing", option M, Q Polycarbonate plastic	Order code for "Housing", option A, R Aluminum, AlSi10Mg, coated
1 800	PN 6	2 200	2 200.7
2 000	PN 6	2 800	2 800.7

AS 4087, PN 16		
DN [mm]	Weight [kg]	
	Order code for "Housing", option M, Q Polycarbonate plastic	Order code for "Housing", option A, R Aluminum, AlSi10Mg, coated
80	12	12.7
100	14	14.7
150	24	24.7

JIS B2220, 10K		
DN [mm]	Weight [kg]	
	Order code for "Housing", option M, Q Polycarbonate plastic	Order code for "Housing", option A, R Aluminum, AlSi10Mg, coated
25	5	5.7
32	5	5.7
40	6	6.7
50	7	7.7
65	9	9.7
80	11	11.7
100	13	13.7
125	19	19.7
150	23	23.7
200	40	40.7
250	68	68.7
300	70	70.7

Order code for "Design", option A

Option A *"Insertion length short; ISO/DVGW to DN400, DN450-2000 1:1"*

EN 1092-1 (DIN 2501)			
DN [mm]	Order code for "Housing", option M, Q Polycarbonate plastic [1)]		
	Weight [kg]		
	PN 6	PN 10	PN 16
450	100	113	139
500	115	133	179
600	156	163	224
700	191	241	288
800	241	316	350

EN 1092-1 (DIN 2501)			
DN [mm]	Order code for "Housing", option M, Q Polycarbonate plastic [1]		
	Weight [kg]		
	PN 6	PN 10	PN 16
900	309	394	441
1000	360	469	563
1200	530	718	840
1400	785	1115	1201
1600	1059	1625	1842
1800	1419	2108	2354
2000	1878	2631	2926

1) Values for aluminum transmitter, AlSi10Mg, coated: + 0.7 kg

AS 2129, Table E		
DN [mm]	Weight [kg]	
	Order code for "Housing", option M, Q Polycarbonate plastic	Order code for "Housing", option A, R Aluminum, AlSi10Mg, coated
450	144	144.7
500	183	183.7
600	261	261.7
700	347	347.7
750	434	434.7
800	494	494.7
900	691	691.7
1000	762	762.7
1200	1238	1238.7

AS 4087, PN 16		
DN [mm]	Weight [kg]	
	Order code for "Housing", option M, Q Polycarbonate plastic	Order code for "Housing", option A, R Aluminum, AlSi10Mg, coated
450	134	134.7
500	183	183.7
600	261	261.7
700	368	368.7
750	446	446.7
800	504	504.7
900	703	703.7
1000	760	760.7
1200	1220	1220.7

Order code for "Calibration flow", options H and K, or options H/K, or order code for "Sensor Option", Option CA

Option	Description
H	MID Type Examination Cert MI-001
K	OIML R49 Class 2
CA	IP66/67, Type 4X, fully welded; corrosion protection EN ISO 12944 C5-M

EN 1092-1 (DIN 2501)			
DN [mm]	Pressure rating	Weight [kg]	
		Order code for "Housing", option M, Q Polycarbonate plastic	Order code for "Housing", option A, R Aluminum, AlSi10Mg, coated
25	PN 40	9	9.7
32	PN 40	10	10.7
40	PN 40	11	11.7
50	PN 40	12	12.7
65	PN 16	13	13.7
80	PN 16	15	15.7
100	PN 16	17	17.7
125	PN 16	22	22.7
150	PN 16	27	27.7
200	PN 10	38	38.7
250	PN 10	51	51.7
300	PN 10	60	60.7

AS 2129, PN 16		
DN [mm]	Weight [kg]	
	Order code for "Housing", option M, Q Polycarbonate plastic	Order code for "Housing", option A, R Aluminum, AlSi10Mg, coated
80	15	15.7
100	17	17.7
125	22	22.7
150	27	27.7

JIS B2220, 10K		
DN [mm]	Weight [kg]	
	Order code for "Housing", option M, Q Polycarbonate plastic	Order code for "Housing", option A, R Aluminum, AlSi10Mg, coated
25	9	9.7
32	10	10.7
40	10	10.7
50	11	11.7
65	12	12.7
80	13	13.7
100	15	15.7

JIS B2220, 10K		
DN [mm]	Weight [kg]	
	Order code for "Housing", option M, Q Polycarbonate plastic	Order code for "Housing", option A, R Aluminum, AlSi10Mg, coated
125	20	20.7
150	25	25.7
200	34	34.7
250	50	50.7
300	57	57.7

Weight in US units

Standard version

ASME B16.5, Class 150		
DN [in]	Weight [lbs]	
	Order code for "Housing", option M, Q Polycarbonate plastic	Order code for "Housing", option A, R Aluminum, AlSi10Mg, coated
1	11	12.5
1½	18	19.5
2	20	21.5
3	26	27.5
4	31	32.5
6	53	54.5
8	95	96.5
10	161	162.5
12	238	239.5
14	386	387.5
16	452	453.5
18	562	563.5
20	628	629.5
24	893	894.5

AWWA C207, Class D		
DN [in]	Weight [lbs]	
	Order code for "Housing", option M, Q Polycarbonate plastic	Order code for "Housing", option A, R Aluminum, AlSi10Mg, coated
28	882	883.5
30	1014	1015.5
32	1213	1214.5
36	1764	1765.5
40	1985	1986.5
42	2426	2427.5
48	3087	3088.5
54	4851	4852.5

AWWA C207, Class D		
DN [in]	Weight [lbs]	
	Order code for "Housing", option M, Q Polycarbonate plastic	Order code for "Housing", option A, R Aluminum, AlSi10Mg, coated
60	5954	5955.5
66	8159	8160.5
72	9041	9042.5
78	10143	10144.5

Order code for "Design", option A

Option A *"Insertion length short; ISO/DVGW to DN400, DN450-2000 1:1"*

ASME B16.5, Class 150		
DN [in]	Weight [lbs]	
	Order code for "Housing", option M, Q Polycarbonate plastic	Order code for "Housing", option A, R Aluminum, AlSi10Mg, coated
18	423	424.5
20	505	506.5
24	668	667.5

AWWA C207, Class D		
DN [in]	Weight [lbs]	
	Order code for "Housing", option M, Q Polycarbonate plastic	Order code for "Housing", option A, R Aluminum, AlSi10Mg, coated
28	589	590.5
30	703	704.5
32	847	848.5
36	1039	1040.5
40	1297	1298.5
42	1480	1481.5
48	1989	1990.5
54	2809	2810.5
60	3517	3518.5
66	4701	4702.5
72	5665	5666.5
78	6866	6867.5

Order code for "Sensor option", option CA

Option CA *"IP66/67, Type 4X, fully welded; corrosion protection EN ISO 12944 C5-M"*

ASME B16.5, Class 150	
DN [in]	Weight [lbs]
1	17.6
1½	19.8
2	24.3

ASME B16.5, Class 150	
DN [in]	**Weight [lbs]**
3	33.1
4	41.9
6	61.7
8	97.0
10	134.5
12	189.6

Transmitter remote version

Wall-mount housing

Depends on the material of the wall-mount housing:
- Polycarbonate plastic: 1.3 kg (2.9 lb)
- Aluminum, AlSi10Mg, coated: 2.0 kg (4.4 lb)

Sensor remote version

Weight data:
- Including sensor connection housing
- Excluding the connecting cable
- Excluding packaging material

Weight in SI units

Standard version

EN 1092-1 (DIN 2501)		
DN [mm]	**Pressure rating**	**Weight [kg]**
25	PN 40	5
32	PN 40	6
40	PN 40	7
50	PN 40	9
65	PN 16	10
80	PN 16	12
100	PN 16	14
125	PN 16	20
150	PN 16	24
200	PN 10	43
250	PN 10	63
300	PN 10	68
350	PN 6	103
375	PN 6	118
400	PN 6	118
450	PN 6	159
500	PN 6	154

EN 1092-1 (DIN 2501)		
DN [mm]	Pressure rating	Weight [kg]
600	PN 6	206
700	PN 6	302
800	PN 6	355
900	PN 6	483
1 000	PN 6	587
1 200	PN 6	848
1 400	PN 6	1298
1 600	PN 6	1698
1 800	PN 6	2198
2 000	PN 6	2798

AS 4087, PN 16	
DN [mm]	Weight [kg]
80	12
100	14
125	20
150	24

JIS B2220, 10K	
DN [mm]	Weight [kg]
25	5
32	5
40	6
50	7
65	9
80	11
100	13
125	19
150	23
200	40
250	67
300	70

Order code for "Design", option A

Option A *"Insertion length short; ISO/DVGW to DN400, DN450-2000 1:1"*

EN 1092-1 (DIN 2501)			
DN [mm]	Weight [kg]		
	PN 6	PN 10	PN 16
450	98	111	139
500	113	131	179
600	154	161	224
700	190	240	288
800	240	315	350
900	308	393	441
1000	359	468	563
1200	529	717	840
1400	784	1114	1200
1600	1058	1624	1841
1800	1418	2107	2353
2000	1877	2630	2925

AS 2129, Table E	
DN [mm]	Weight [kg]
450	142
500	181
600	259
700	346
750	433
800	493
900	690
1000	761
1200	1237

AS 4087, PN 16	
DN [mm]	Weight [kg]
450	132
500	181
600	259
700	367
750	445
800	503
900	702
1000	759
1200	1219

Order code for "Calibration flow", options H and K, or order code for "Sensor option", option CA

Option	Description
H	MID Type Examination Cert MI-001
K	OIML R49 Class 2
CA	IP66/67, Type 4X, fully welded; corrosion protection EN ISO 12944 C5-M

EN 1092-1 (DIN 2501)		
DN [mm]	**Pressure rating**	**[kg]**
25	PN 40	6.5
32	PN 40	8
40	PN 40	8.5
50	PN 40	10
65	PN 16	11
80	PN 16	13
100	PN 16	15
125	PN 16	20
150	PN 16	25
200	PN 10	36
250	PN 10	49
300	PN 10	58

AS 4087, PN 16	
DN [mm]	**[kg]**
80	13
100	15
150	25

JIS B2220, 10K	
DN [mm]	**Weight [kg]**
25	6.5
32	7.5
40	7.5
50	9
65	10
80	11
100	13
125	18
150	23
200	32

JIS B2220, 10K	
DN [mm]	**Weight [kg]**
250	48
300	55

Weight in US units

Standard version

ASME B16.5, Class 150	
DN [in]	**Weight [lbs]**
1	11
1½	15
2	20
3	26
4	31
6	53
8	95
10	161
12	238
14	381
16	448
18	558
20	624
24	889

AWWA C207, Class D	
DN [in]	**Weight [lbs]**
28	878
30	1010
32	1208
36	1760
40	1980
42	2421
48	3083
54	4847
60	5949
66	8154
72	9036
78	10139

Order code for "Design", option A

Option A *"Insertion length short; ISO/DVGW to DN400, DN450-2000 1:1"*

ASME B16.5, Class 150	
DN [in]	**Weight [lbs]**
18	420
20	501
24	664

AWWA C207, Class D	
DN [in]	**Weight [lbs]**
28	587
30	701
32	845
36	1036
40	1294
42	1477
48	1987
54	1273
60	3515
66	4699
72	5662
78	6864

Order code for "Sensor option", option CA

Option CA *"IP66/67, Type 4X, fully welded; corrosion protection EN ISO 12944 C5-M"*

ASME B16.5, Class 150	
DN [in]	**Weight [lbs]**
1	13
1½	15.5
2	20
3	29
4	37
6	57
8	93
10	130
12	185

Measuring tube specification

Nominal diameter		Pressure rating				Measuring tube internal diameter			
		EN (DIN)	ASME AWWA	AS 2129 AS 4087	JIS	Hard rubber		Polyurethane	
[mm]	[in]					[mm]	[in]	[mm]	[in]
25	1	PN 40	Class 150	–	20K	–	–	24	0.94
32	–	PN 40	–	–	20K	–	–	32	1.26
40	1 ½	PN 40	Class 150	–	20K	–	–	38	1.50
50	2	PN 40	Class 150	Table E, PN 16	10K	50	1.97	50	1.97
65	–	PN 16	–	–	10K	66	2.60	66	2.60
80	3	PN 16	Class 150	Table E, PN 16	10K	79	3.11	79	3.11
100	4	PN 16	Class 150	Table E, PN 16	10K	102	4.02	102	4.02
125	–	PN 16	–	–	10K	127	5.00	127	5.00
150	6	PN 16	Class 150	Table E, PN 16	10K	156	6.14	156	6.14
200	8	PN 10	Class 150	Table E, PN 16	10K	204	8.03	204	8.03
250	10	PN 10	Class 150	Table E, PN 16	10K	258	10.2	258	10.2
300	12	PN 10	Class 150	Table E, PN 16	10K	309	12.2	309	12.2
350	14	PN 6	Class 150	Table E, PN 16	–	342	13.5	342	13.5
375	15	–	–	PN 16	–	392	15.4	–	–
400	16	PN 6	Class 150	Table E, PN 16	–	392	15.4	392	15.4
450	18	PN 6	Class 150	–	–	437	17.2	437	17.2
500	20	PN 6	Class 150	Table E, PN 16	–	492	19.4	492	19.4
600	24	PN 6	Class 150	Table E, PN 16	–	594	23.4	594	23.4
700	28	PN 6	Class D	Table E, PN 16	–	692	27.2	692	27.2
750	30	–	Class D	Table E, PN 16	–	742	29.2	742	29.2
800	32	PN 6	Class D	Table E, PN 16	–	794	31.3	794	31.3
900	36	PN 6	Class D	Table E, PN 16	–	891	35.1	891	35.1
1000	40	PN 6	Class D	Table E, PN 16	–	994	39.1	994	39.1
–	42	–	Class D	–	–	1043	41.1	1043	41.1
1200	48	PN 6	Class D	Table E, PN 16	–	1197	47.1	1197	47.1
–	54	–	Class D	–	–	1339	52.7	–	–
1400	–	PN 6	–	–	–	1402	55.2	–	–
–	60	–	Class D	–	–	1492	58.7	–	–
1600	–	PN 6	–	–	–	1600	63.0	–	–
–	66	–	Class D	–	–	1638	64.5	–	–
1800	72	PN 6	Class D	–	–	1786	70.3	–	–
2000	78	PN 6	Class D	–	–	1989	78.3	–	–

Materials

Transmitter housing

Order Code for "Housing"

- Compact version, standard:
  - Option **A**: aluminum, AlSi10Mg, coated
  - Option **M**: polycarbonate plastic
- Compact version, inclined:
  - Option **Q**: polycarbonate plastic
  - Option **R**: aluminum, AlSi10Mg, coated
- Remote version (wall-mount housing):
  - Option **N**: polycarbonate plastic
  - Option **P**: aluminum, AlSi10Mg, coated

Window material

Transmitter housing material	Window material
Polycarbonate plastic	Plastic
Aluminum, AlSi10Mg, coated	Glass

Cable entries/cable glands

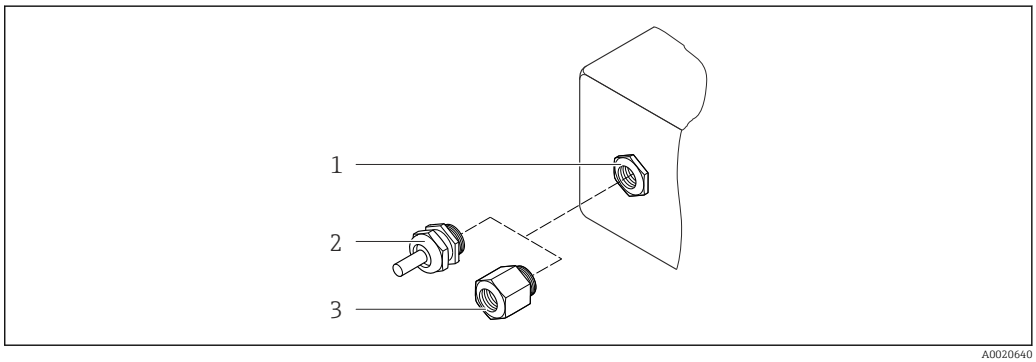

38 *Possible cable entries/cable glands*

1 *Cable entry in transmitter housing, wall-mount housing or connection housing with internal thread M20 x 1.5*
2 *Cable gland M20 x 1.5*
3 *Adapter for cable entry with internal thread G ½" or NPT ½"*

Compact and remote versions and sensor connection housing

Cable entry/cable gland	Material
Cable gland M20 × 1.5	Plastic
Remote version: cable gland M20 × 1.5 Option of reinforced connecting cable	▪ Sensor connection housing: Nickel-plated brass ▪ Transmitter wall-mount housing: Plastic
Adapter for cable entry with internal thread G ½" or NPT ½"	Nickel-plated brass

Connecting cable for remote version

Electrode and coil current cable

- Standard cable: PVC cable with copper shield
- Reinforced cable: PVC cable with copper shield and additional steel wire braided jacket

Sensor housing

- DN 25 to 300 (1 to 12"):
  - Aluminum, AlSi10Mg, coated
  - Carbon steel with Al/Zn protective coating
- DN 50 to 300 (2 to 12"):
  Carbon steel with protective varnish (IP68)
- DN 350 to 2000 (14 to 78"):
  Carbon steel with protective varnish

Sensor connection housing

- Standard: aluminum, AlSi10Mg, coated (IP66/67)
- Option:
  - Polycarbonate for IP68 with DN 50 to 300 (2 to 12")
  - Polycarbonate for order code "Sensor option", option CA...CE "Corrosion protection" with DN 350 to 2000 (14 to 78")

Measuring tubes

- DN 25 to 300 (1 to 12") [1]: stainless steel, 1.4301/1.4306/304/304L
- DN 350 to 1200 (14 to 48") [1]: stainless steel, 1.4301/304
- DN 1350 to 2000 (54 to 78") [1]: stainless steel, 1.4301 similar to 304

Liner

- DN 25 to 1200 (1 to 48"): polyurethane
- DN 50 to 2000 (2 to 78"): hard rubber

Electrodes

- Stainless steel, 1.4435 (316L)
- Alloy C22, 2.4602 (UNS N06022)
- Tantalum

Process connections

EN 1092-1 (DIN 2501)

- DN 25 to 1200 [1]:
  - Stainless steel, 1.4404/1.4571/F316L
  - Carbon steel, A105/FE410WB/P250GH/S235JRG2/S235JR+N
- DN 1350 to 2000 [1]:
  - Stainless steel ,1.4404/1.4571
  - Carbon steel, P250GH/S235JRG2
- DN 450 to 2000 [2]:
  Carbon steel, A105/S235JRG2

EN 1092-1 (DIN 2501), PN6:
DN 350 to 1000 [1]:
Carbon steel, A105/FE410WB/S235JRG2

1) For carbon steel flange material with Al/Zn protective coating (DN 25 to 300 (1 to 12")), protective varnish (IP68) (DN 50 to 300 (2 to 12")) or protective varnish ≥ DN 350 (14")
2) Order Code for "Design", Option A "Insertion length short"

ASME B16.5

- DN 25 to 1200 (1 to 48"):
  Stainless steel, F316L similar to 1.4404
- DN 25 to 300 (1 to 12"): [2)]
  Carbon steel, A105 similar to 1.0432
- DN 350 to 1200 (14 to 48") [2)]:
  Carbon steel, A105/A515 Grade 70

AWWA C207

- DN 48":
  Carbon steel, A105/A181/P265GH/S275JR
- DN 54 to 72":
  Carbon steel, P265GH similar to 1.0425
- DN 48 to 78" [2)]:
  Carbon steel, A105/A181/P265GH/S275JR

AS 2129

- DN 50 to 1200:
  Carbon steel, A105/S235JRG2
- DN 350 to 1200 [2)]:
  Carbon steel, A105/FE410WB/P235GH/P265GH/S235JRG2

AS 4087

- DN 50 to 1200:
  Carbon steel, A105/S275JR
- DN 350 to 1200 [2)]:
  Carbon steel, A105/P265GH/S275JR

JIS B2220

- Stainless steel, F316L similar to 1.4404
- Carbon steel, A105/A350LF2 [1)]

Seals

In accordance with DIN EN 1514-1

Accessories

Display protection

Stainless steel, 1.4301 (304L)

Ground disks

- Stainless steel, 1.4435 (316L)
- Alloy C22, 2.4602 (UNS N06022)
- Tantalum

Fitted electrodes

Measurement, reference and empty pipe detection electrodes available as standard with:
- 1.4435 (316L)
- Alloy C22, 2.4602 (UNS N06022)
- Tantalum

Optionally available with DN 350 to 2000 (14 to 78"):
Exchangeable measuring electrodes made from 1.4435 (316L)

Process connections

- EN 1092-1 (DIN 2501) [3]
  - DN ≤ 300: fixed flange (PN 10/16/25/40) = form A
  - DN ≥ 350: fixed flange (PN 6/10/16/25) = flat face
  - DN 450 to 2000 [4]: fixed flange (PN 6/10/16) = flat face
- ASME B16.5
  - DN 25 to 600 (1 to 24"): fixed flange (Class 150)
  - DN 350 to 2000 (14 to 78") [4]: fixed flange (Class 150)
  - DN 25 to 150 (1 to 6"): fixed flange (Class 300)
- AWWA C207
  - DN 48 to 72": fixed flange (Class D)
  - DN 48 to 78" [4]: fixed flange (Class D)
- AS 2129
  - DN 50 to 1200: fixed flange (Table E)
  - DN 350 to 1200 [4]: fixed flange (Table E)
- AS 4087
  - DN 50 to 1200): fixed flange (PN 16)
  - DN 350 to 1200 [4]: fixed flange (PN 16)
- JIS B2220
  - DN 50 to 300: fixed flange (10K)
  - DN 25 to 300: fixed flange (20K)

For information on the materials of the process connections (→ 148)

Surface roughness

Electrodes with 1.4435 (316L); Alloy C22, 2.4602 (UNS N06022); tantalum:
≤ 0.3 to 0.5 µm (11.8 to 19.7 µin)
(All data relate to parts in contact with fluid)

16.11 Operability

Local operation

Via display module

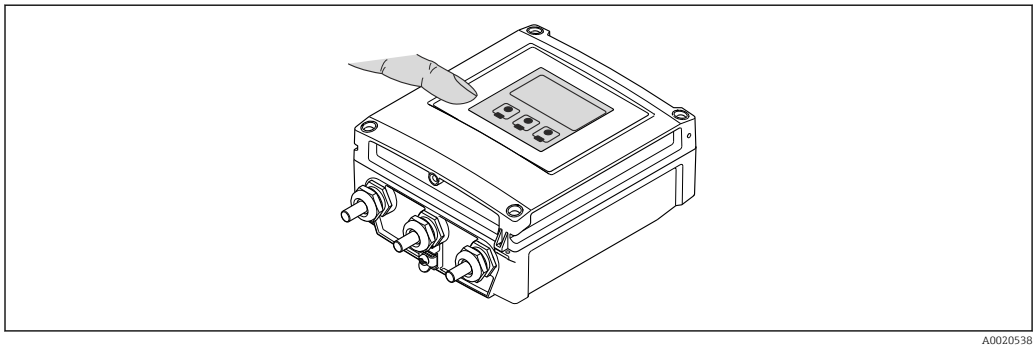

A0020538

Display elements

- 4-line display
- White background lighting; switches to red in event of device errors
- Format for displaying measured variables and status variables can be individually configured
- Permitted ambient temperature for the display: −20 to +50 °C (−4 to +122 °F)
  The readability of the display may be impaired at temperatures outside the temperature range.

3) Dimensions as per DIN 2501, DN 65 (2 ½") PN 16 and DN 600 (24") PN 16 only as per EN 1092-1
4) Order code for "Design", option A "Insertion length short"

Operating elements
External operation via touch control; 3 optical keys: ⊕, ⊖, ℮

Additional functionality
- Data backup function
  The device configuration can be saved in the display module.
- Data comparison function
  The device configuration saved in the display module can be compared to the current device configuration.
- Data transfer function
  The transmitter configuration can be transmitted to another device using the display module.

Remote operation

Via PROFIBUS DP network

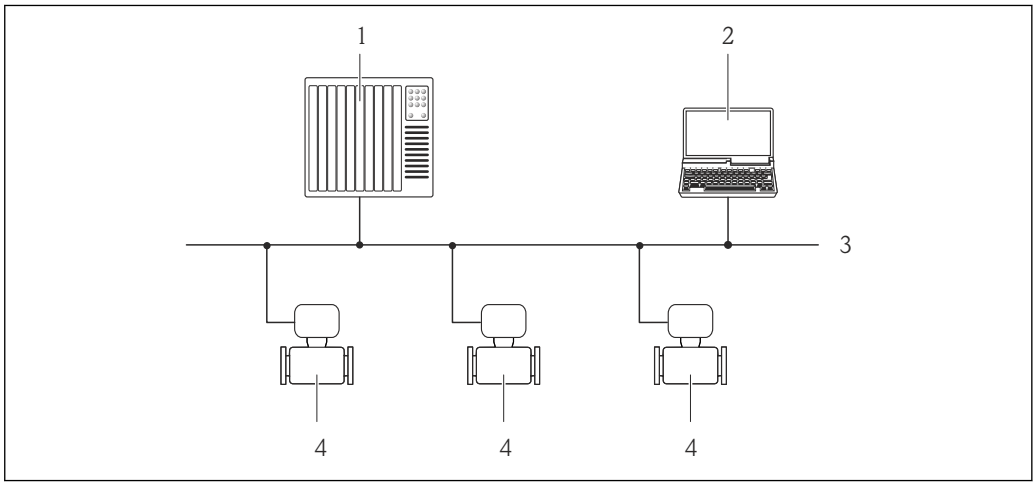

A0020903

1 Automation system
2 Computer with PROFIBUS network card
3 PROFIBUS DP network
4 Measuring device

Service interface

Service interface (CDI-RJ45)

PROFIBUS DP

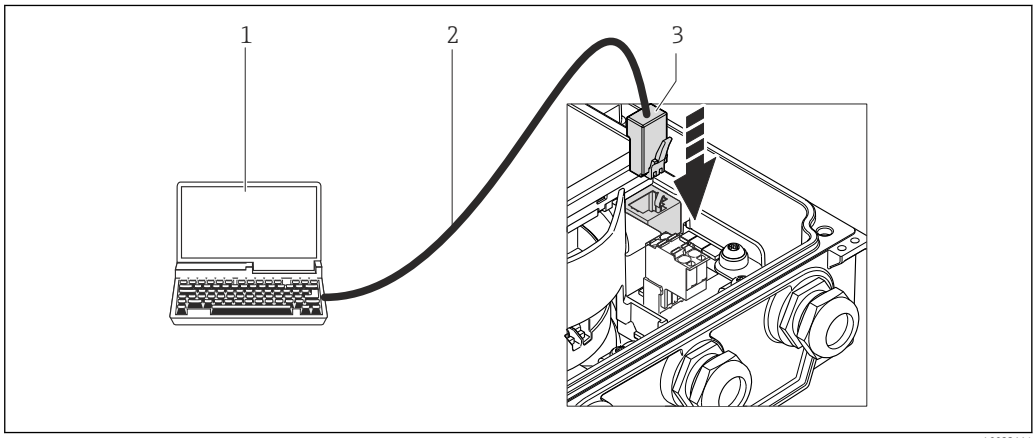

A0023114

1 Computer with Web browser (e.g. Internet Explorer) for accessing the integrated device Web server or with "FieldCare" operating tool with COM DTM "CDI Communication TCP/IP"
2 Standard Ethernet connecting cable with RJ45 plug
3 Service interface (CDI -RJ45) of the measuring device with access to the integrated Web server

Languages	Can be operated in the following languages: ▪ Via local display: English, German, French, Spanish, Italian, Dutch, Portuguese, Polish, Russian, Turkish, Chinese, Japanese, Bahasa (Indonesian), Vietnamese, Czech ▪ Via "FieldCare" operating tool: English, German, French, Spanish, Italian, Chinese, Japanese ▪ Via Web browser English, German, French, Spanish, Italian, Dutch, Portuguese, Polish, Russian, Turkish, Chinese, Japanese, Bahasa (Indonesian), Vietnamese, Czech

16.12 Certificates and approvals

CE mark	The measuring system is in conformity with the statutory requirements of the applicable EC Directives. These are listed in the corresponding EC Declaration of Conformity along with the standards applied. Endress+Hauser confirms successful testing of the device by affixing to it the CE mark.
C-Tick symbol	The measuring system meets the EMC requirements of the "Australian Communications and Media Authority (ACMA)".
Ex approval	The devices are certified for use in hazardous areas and the relevant safety instructions are provided in the separate "Control Drawing" document. Reference is made to this document on the nameplate.
Drinking water approval	▪ ACS ▪ KTW/W270 ▪ NSF 61 ▪ WRAS BS 6920
Certification PROFIBUS	**PROFIBUS interface** The measuring device is certified and registered by the PROFIBUS User Organization (PNO). The measuring system meets all the requirements of the following specifications: ▪ Certified in accordance with PROFIBUS PA Profile 3.02 ▪ The device can also be operated with certified devices of other manufacturers (interoperability)
Measuring instrument approval	Promag W 400 is (optionally) approved as a cold water meter (MI-001) for volume measurement in service subject to legal metrological control in accordance with the European Measuring Instruments Directive 2004/22/EC (MID). Promag W 400 is qualified to OIML R49 and has an OIML Certificate of Conformity (optional).
Other standards and guidelines	▪ EN 60529 Degrees of protection provided by enclosures (IP code) ▪ EN 61010-1 Safety requirements for electrical equipment for measurement, control and laboratory use ▪ IEC/EN 61326 Emission in accordance with Class A requirements. Electromagnetic compatibility (EMC requirements).

- ANSI/ISA-61010-1 (82.02.01): 2004
  Safety Requirements for Electrical Equipment for Measurement, Control and Laboratory Use - Part 1 General Requirements
- CAN/CSA-C22.2 No. 61010-1-04
  Safety Requirements for Electrical Equipment for Measurement, Control and Laboratory Use - Part 1 General Requirements
- NAMUR NE 21
  Electromagnetic compatibility (EMC) of industrial process and laboratory control equipment
- NAMUR NE 32
  Data retention in the event of a power failure in field and control instruments with microprocessors
- NAMUR NE 43
  Standardization of the signal level for the breakdown information of digital transmitters with analog output signal.
- NAMUR NE 53
  Software of field devices and signal-processing devices with digital electronics
- NAMUR NE 105
  Specifications for integrating fieldbus devices in engineering tools for field devices
- NAMUR NE 107
  Self-monitoring and diagnosis of field devices
- NAMUR NE 131
  Requirements for field devices for standard applications

16.13 Application packages

Many different application packages are available to enhance the functionality of the device. Such packages might be needed to address safety aspects or specific application requirements.

The application packages can be ordered from Endress+Hauser either directly with the device or subsequently. Detailed information on the order code in question is available from your local Endress+Hauser sales center or on the product page of the Endress+Hauser website: www.endress.com.

Cleaning

Package	Description
Electrode cleaning circuit (ECC)	The electrode cleaning circuit (ECC) function has been developed to have a solution for applications where magnetite (Fe_3O_4) deposits frequently occur (e.g. hot water). Since magnetite is highly conductive this build up leads to measuring errors and ultimately to the loss of signal. The application package is designed to AVOID build up of highly conductive matter and thin layers (typical of magnetite).

Diagnostics functions

Package	Description
HistoROM extended function	Comprises extended functions concerning the event log and the activation of the measured value memory. Event log: Memory volume is extended from 20 message entries (basic version) to up to 100 entries. Data logging (line recorder): ▪ Memory capacity for up to 1000 measured values is activated. ▪ 250 measured values can be output via each of the 4 memory channels. The recording interval can be defined and configured by the user. ▪ Data logging is visualized via the local display or FieldCare.

Heartbeat Technology

Package	Description
Heartbeat Verification +Monitoring	**Heartbeat Monitoring:** Continuously supplies monitoring data, which are characteristic of the measuring principle, for an external condition monitoring system. This makes it possible to: ▪ Draw conclusions - using these data and other information - about the impact the measuring application has on the measuring performance over time. ▪ Schedule servicing in time. ▪ Monitor the product quality, e.g. gas pockets. **Heartbeat Verification:** Makes it possible to check the device functionality on demand when the device is installed, without having to interrupt the process. ▪ Access via onsite operation or other operating interfaces, such as FieldCare for instance. ▪ End-to-end, traceable documentation of the verification results, including report. ▪ Makes it possible to extend calibration intervals in accordance with operator's risk assessment.

16.14 Accessories

Overview of accessories available for order (→ 122)

16.15 Supplementary documentation

For an overview of the scope of the associated Technical Documentation, refer to the following:
- The CD-ROM provided for the device (depending on the device version, the CD-ROM might not be part of the delivery!)
- The *W@M Device Viewer* : Enter the serial number from the nameplate (www.endress.com/deviceviewer)
- The *Endress+Hauser Operations App*: Enter the serial number from the nameplate or scan the 2-D matrix code (QR code) on the nameplate.

Standard documentation

Brief Operating Instructions

Measuring device	Documentation code
Promag W 400	KA01114D

Technical Information

Measuring device	Documentation code
Promag W 400	TI01046D

Supplementary device-dependent documentation

Special Documentation

Contents	Documentation code
Heartbeat Technology	SD01183D
Information on Custody Transfer Measurement	SD01230D

Installation Instructions

Contents	Documentation code
Installation Instructions for spare part sets	Overview of accessories available for order (→ 122)

17 Appendix

17.1 Overview of the operating menu

The following tables provide an overview of the entire operating menu structure with menus and parameters. The page reference indicates where a description of the parameter can be found in the manual.

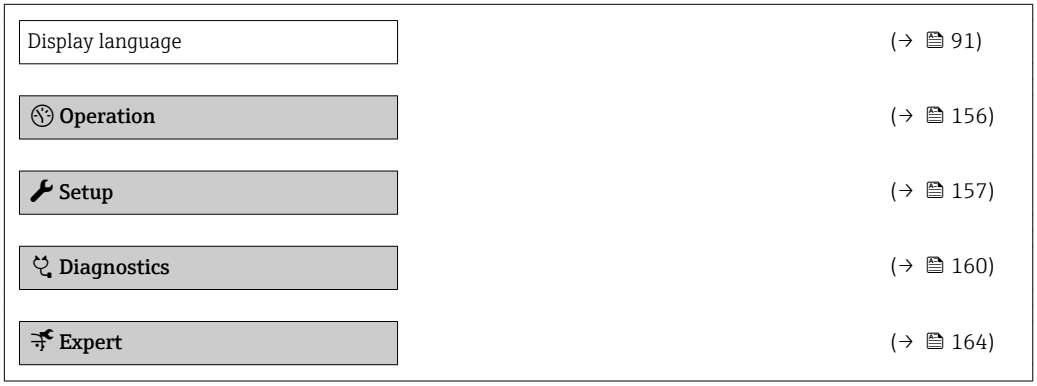

17.1.1 "Operation" menu

Navigation Operation

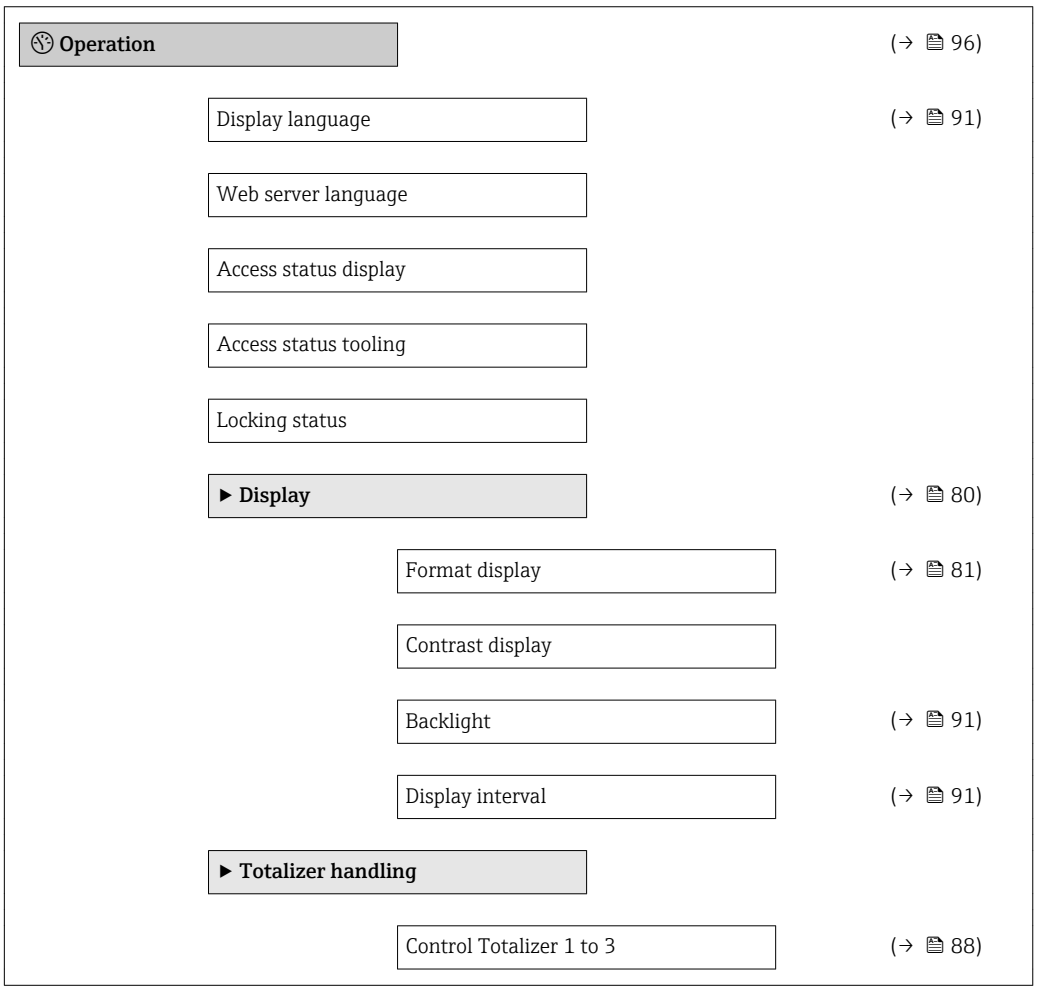

	Preset value 1 to 3	(→ 98)
	Reset all totalizers	

17.1.2 "Setup" menu

Navigation Setup

Setup		(→ 79)
	Device tag	(→ 79)
	▶ System units	(→ 79)
		Volume flow unit (→ 80)
		Volume unit (→ 80)
		Conductivity unit (→ 80)
		Temperature unit (→ 80)
		Mass flow unit (→ 80)
		Mass unit (→ 80)
		Density unit (→ 80)
	▶ Communication	(→ 82)
		Device address (→ 82)
	▶ Display	(→ 80)
		Format display (→ 81)
		Value 1 display (→ 81)
		0% bargraph value 1 (→ 82)
		100% bargraph value 1 (→ 82)
		Value 2 display (→ 82)
		Value 3 display (→ 82)
		0% bargraph value 3 (→ 82)

- 100% bargraph value 3 (→ 82)
- Value 4 display (→ 82)
- ▶ **Analog inputs** (→ 83)
  - ▶ **Analog input 1 to 4**
    - Channel (→ 83)
    - PV filter time (→ 83)
    - Fail safe type (→ 83)
    - Fail safe value (→ 83)
- ▶ **Low flow cut off** (→ 83)
  - Assign process variable (→ 84)
  - On value low flow cutoff (→ 84)
  - Off value low flow cutoff (→ 84)
  - Pressure shock suppression (→ 84)
- ▶ **Empty pipe detection** (→ 85)
  - Empty pipe detection (→ 85)
  - New adjustment (→ 85)
  - Switch point empty pipe detection (→ 85)
  - Response time empty pipe detection (→ 85)
- ▶ **Advanced setup** (→ 86)
  - Enter access code
  - ▶ **Sensor adjustment** (→ 87)
    - Installation direction (→ 87)
  - ▶ **Totalizer 1 to 3** (→ 87)
    - Assign process variable (→ 87)
    - Unit totalizer (→ 87)

	Control Totalizer 1 to 3	(→ 88)
	Totalizer operation mode	(→ 88)
	Failure mode	(→ 88)
▶ **Display**		(→ 80)
	Format display	(→ 81)
	Value 1 display	(→ 81)
	0% bargraph value 1	(→ 82)
	100% bargraph value 1	(→ 82)
	Decimal places 1	(→ 90)
	Value 2 display	(→ 82)
	Decimal places 2	(→ 90)
	Value 3 display	(→ 82)
	0% bargraph value 3	(→ 82)
	100% bargraph value 3	(→ 82)
	Decimal places 3	(→ 90)
	Value 4 display	(→ 82)
	Decimal places 4	(→ 90)
	Display language	(→ 91)
	Display interval	(→ 91)
	Display damping	(→ 91)
	Header	(→ 91)
	Header text	(→ 91)
	Separator	(→ 91)
	Backlight	(→ 91)

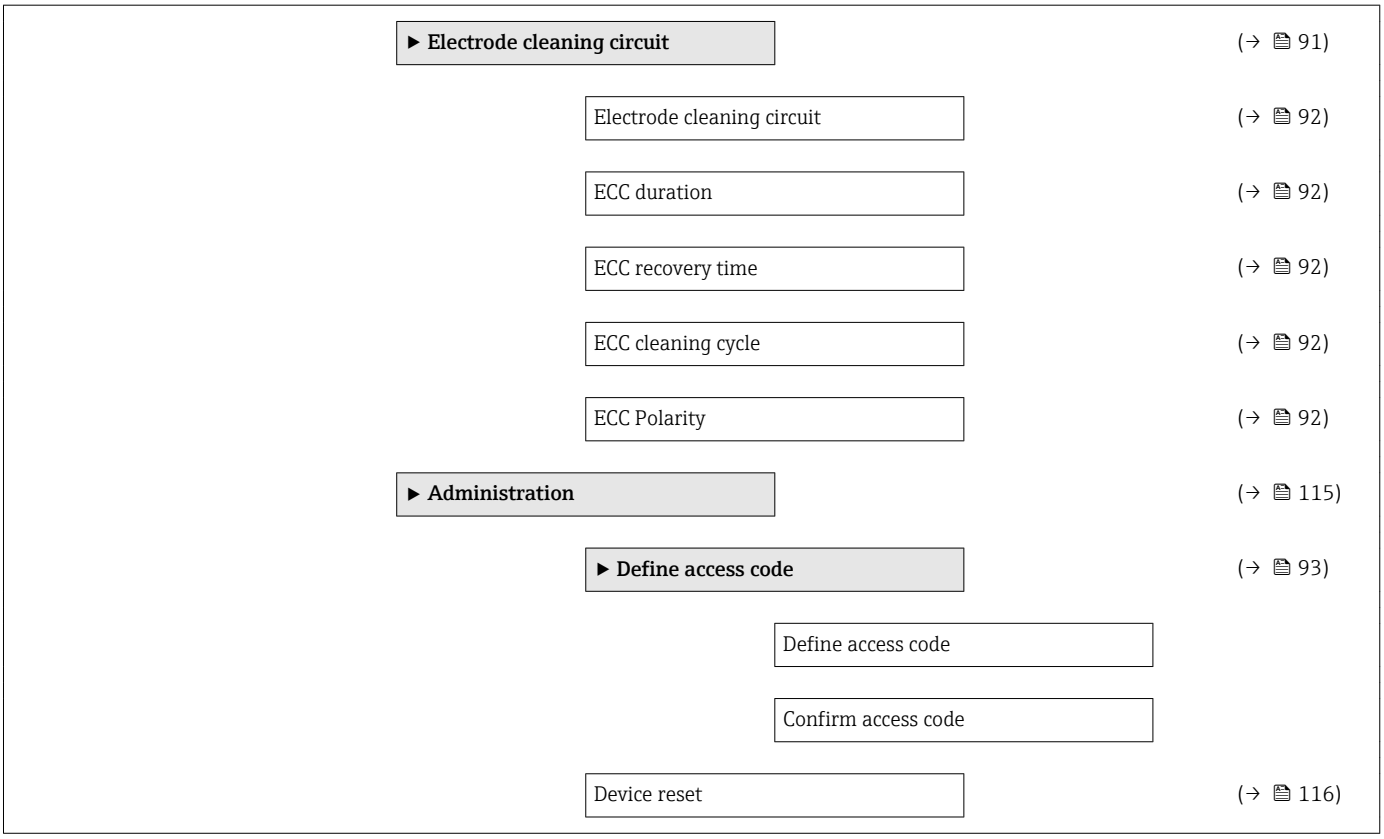

17.1.3 "Diagnostics" menu

Navigation Diagnostics

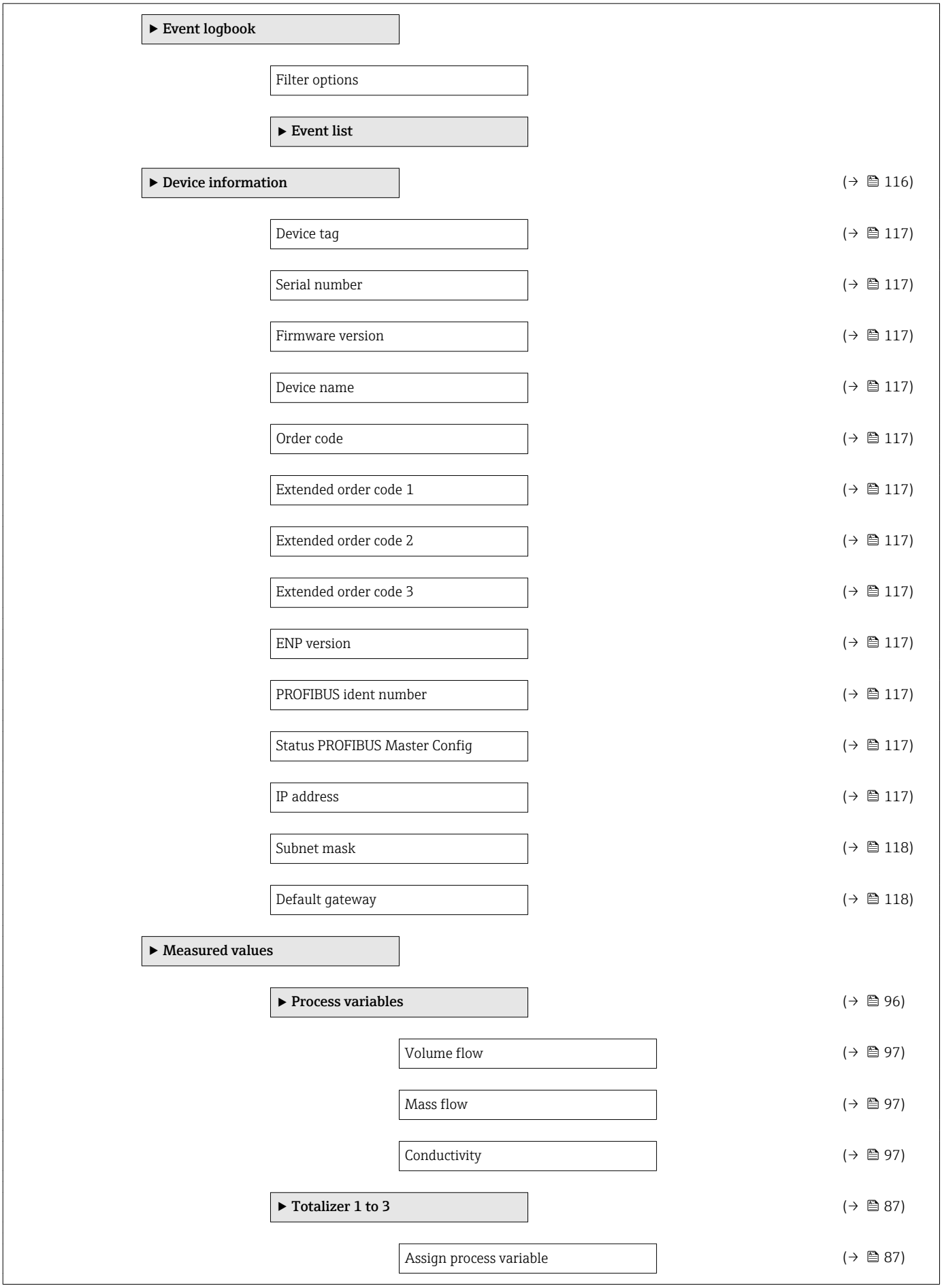
▶ Event logbook
Filter options
▶ Event list
▶ Device information
(→ 116)
Device tag
(→ 117)
Serial number
(→ 117)
Firmware version
(→ 117)
Device name
(→ 117)
Order code
(→ 117)
Extended order code 1
(→ 117)
Extended order code 2
(→ 117)
Extended order code 3
(→ 117)
ENP version
(→ 117)
PROFIBUS ident number
(→ 117)
Status PROFIBUS Master Config
(→ 117)
IP address
(→ 117)
Subnet mask
(→ 118)
Default gateway
(→ 118)
▶ Measured values
▶ Process variables
(→ 96)
Volume flow
(→ 97)
Mass flow
(→ 97)
Conductivity
(→ 97)
▶ Totalizer 1 to 3
(→ 87)
Assign process variable
(→ 87)

Totalizer value 1 to 3 (→ 97)

Totalizer status 1 to 3 (→ 97)

Totalizer status (Hex) 1 to 3 (→ 97)

▶ **Data logging** (→ 98)

Assign channel 1 (→ 100)

Assign channel 2

Assign channel 3

Assign channel 4

Logging interval (→ 100)

Clear logging data (→ 100)

▶ **Display channel 1**

▶ **Display channel 2**

▶ **Display channel 3**

▶ **Display channel 4**

▶ **Analog inputs** (→ 83)

▶ **Analog input 1 to 4**

Channel (→ 83)

Out value

Out status

Out status

▶ **Heartbeat**

▶ **Performing verification**

Year

Month

Day

Hour

AM/PM

Minute

Verification mode

External device information

External reference voltage 1

External reference voltage 2

Start verification

Progress

Status

Overall result

▶ **Verification results**

Date/time

Verification ID

Operating time

Overall result

Sensor

Sensor electronic module

I/O module

▶ **Monitoring results**

Noise

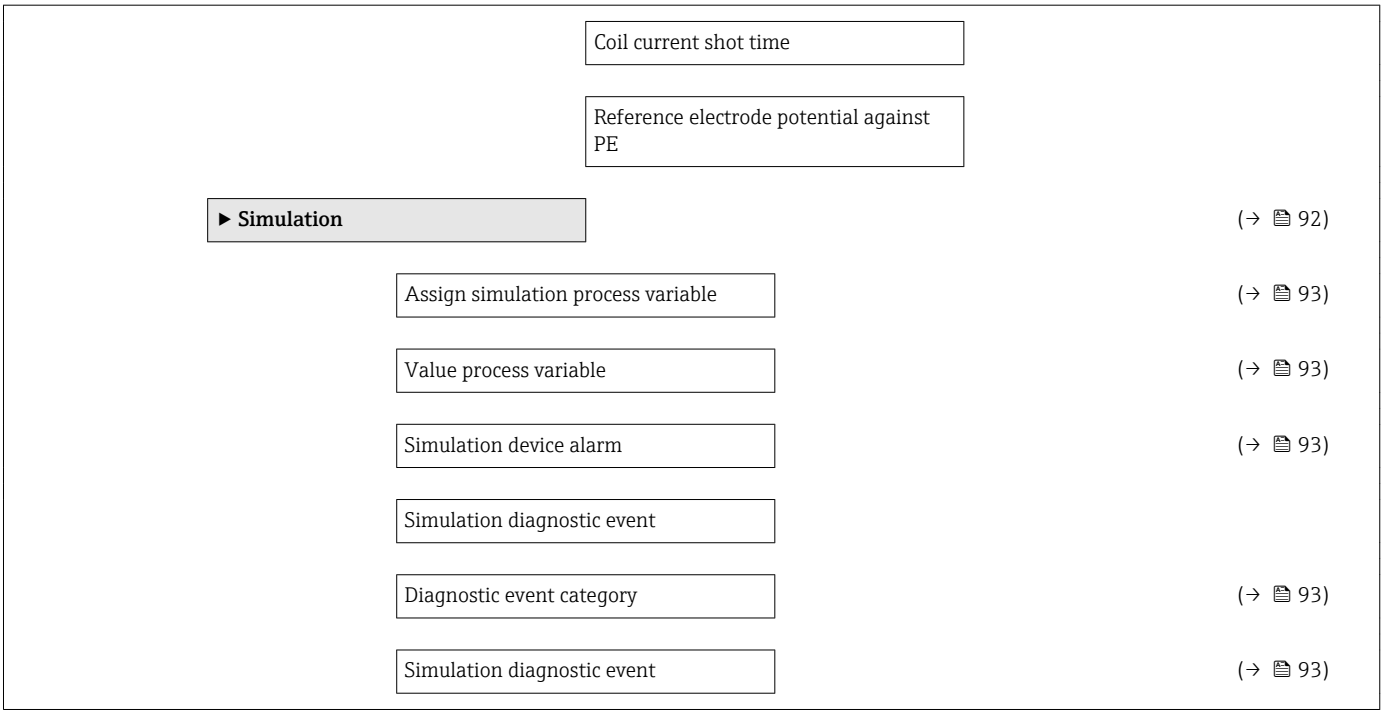

17.1.4 "Expert" menu

The following tables provide an overview of the **Expert** menu with its submenus and parameters. The direct access code to the parameter is given in brackets. The page reference indicates where a description of the parameter can be found in the manual.

Navigation Expert

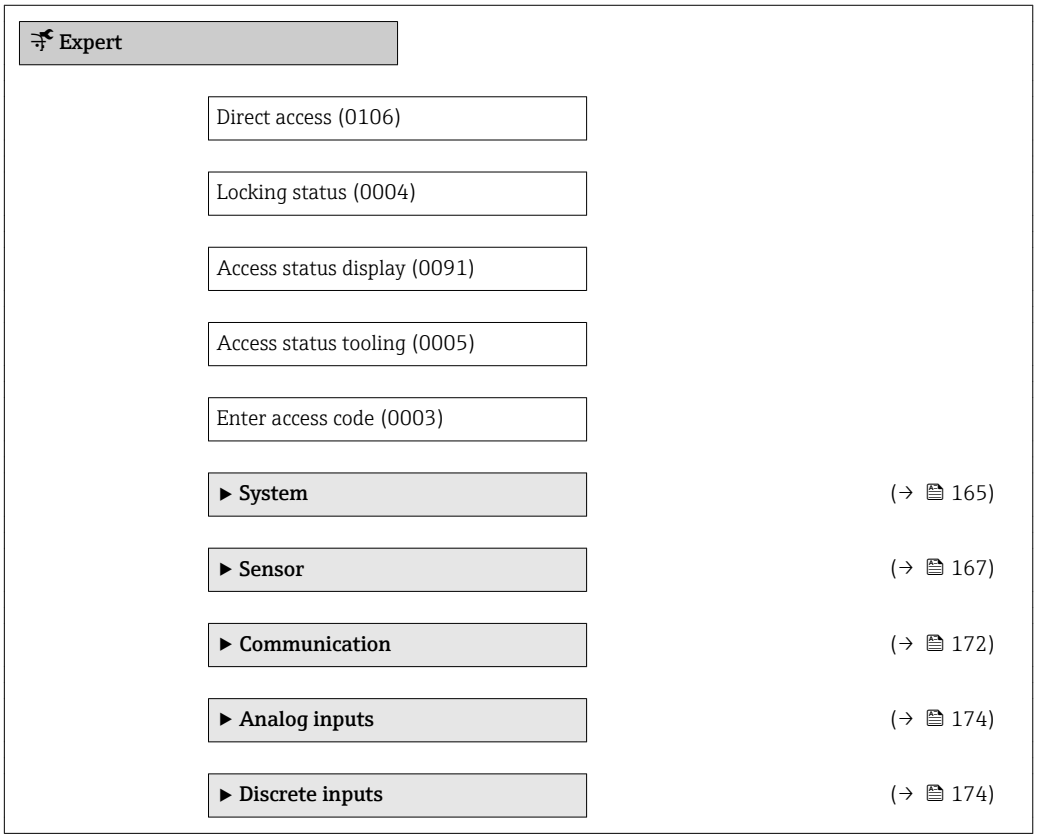

▶ **Analog outputs**	(→ 174)
▶ **Discrete outputs**	(→ 175)
▶ **Application**	(→ 175)
▶ **Diagnostics**	(→ 177)

"System" submenu

Navigation Expert → System

▶ **System**	
▶ **Display**	(→ 80)
Display language (0104)	(→ 91)
Format display (0098)	(→ 81)
Value 1 display (0107)	(→ 81)
0% bargraph value 1 (0123)	(→ 82)
100% bargraph value 1 (0125)	(→ 82)
Decimal places 1 (0095)	(→ 90)
Value 2 display (0108)	(→ 82)
Decimal places 2 (0117)	(→ 90)
Value 3 display (0110)	(→ 82)
0% bargraph value 3 (0124)	(→ 82)
100% bargraph value 3 (0126)	(→ 82)
Decimal places 3 (0118)	(→ 90)
Value 4 display (0109)	(→ 82)
Decimal places 4 (0119)	(→ 90)
Display interval (0096)	(→ 91)
Display damping (0094)	(→ 91)

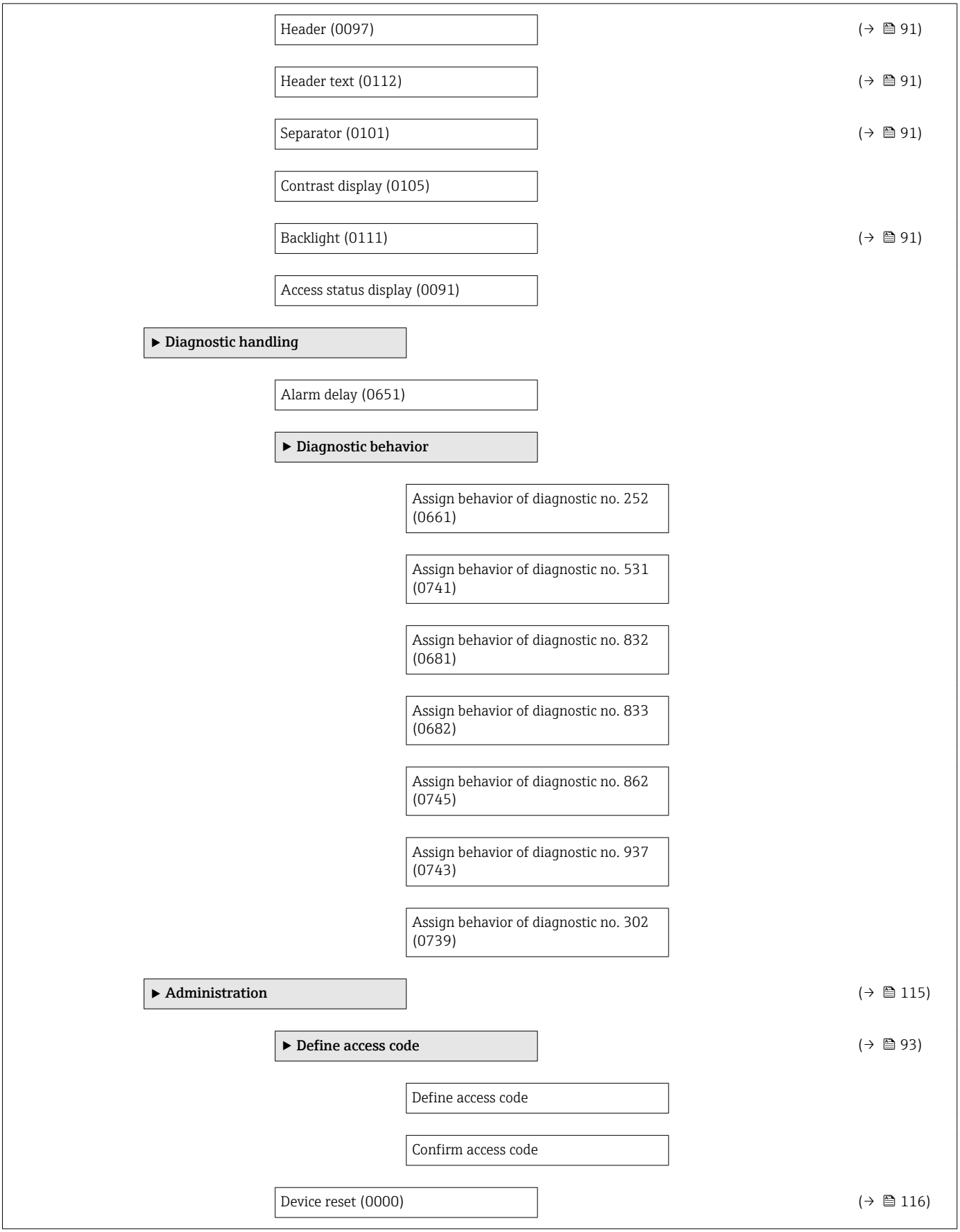
Header (0097)
(→ 91)
Header text (0112)
(→ 91)
Separator (0101)
(→ 91)
Contrast display (0105)
Backlight (0111)
(→ 91)
Access status display (0091)
▶ Diagnostic handling
Alarm delay (0651)
▶ Diagnostic behavior
Assign behavior of diagnostic no. 252 (0661)
Assign behavior of diagnostic no. 531 (0741)
Assign behavior of diagnostic no. 832 (0681)
Assign behavior of diagnostic no. 833 (0682)
Assign behavior of diagnostic no. 862 (0745)
Assign behavior of diagnostic no. 937 (0743)
Assign behavior of diagnostic no. 302 (0739)
▶ Administration
(→ 115)
▶ Define access code
(→ 93)
Define access code
Confirm access code
Device reset (0000)
(→ 116)

Activate SW option (0029)

Software option overview (0015)

"Sensor" submenu

Navigation Expert → Sensor

- ▶ **Sensor**
  - ▶ **Measured values**
    - ▶ **Process variables** (→ 96)
      - Volume flow (1838) (→ 97)
      - Mass flow (1847) (→ 97)
      - Conductivity (1850) (→ 97)
    - ▶ **Totalizer** (→ 87)
      - Totalizer value 1 to 3 (3827–1 to 3) (→ 97)
      - Totalizer status (Hex) 1 to 3 (3825–1 to 3) (→ 97)
      - Totalizer status 1 to 3 (3826–1 to 3) (→ 97)
    - ▶ **System units** (→ 79)
      - Volume flow unit (0553) (→ 80)
      - Volume unit (0563) (→ 80)
      - Conductivity unit (0582) (→ 80)
      - Temperature unit (0557) (→ 80)
      - Mass flow unit (0554) (→ 80)
      - Mass unit (0574) (→ 80)
      - Density unit (0555) (→ 80)
      - Date/time format (2812)

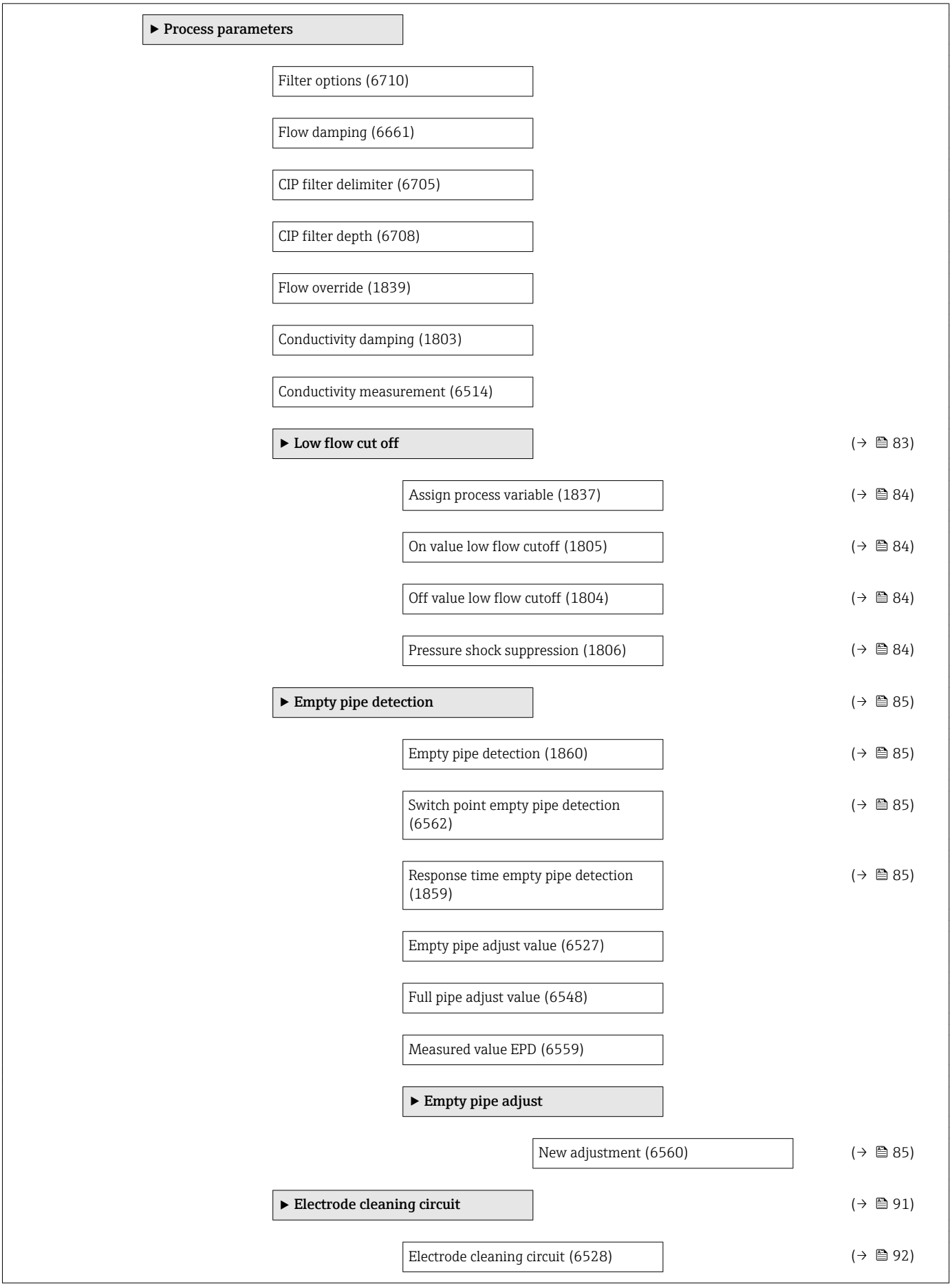
▶ Process parameters
Filter options (6710)
Flow damping (6661)
CIP filter delimiter (6705)
CIP filter depth (6708)
Flow override (1839)
Conductivity damping (1803)
Conductivity measurement (6514)
▶ Low flow cut off
(→ 83)
Assign process variable (1837)
(→ 84)
On value low flow cutoff (1805)
(→ 84)
Off value low flow cutoff (1804)
(→ 84)
Pressure shock suppression (1806)
(→ 84)
▶ Empty pipe detection
(→ 85)
Empty pipe detection (1860)
(→ 85)
Switch point empty pipe detection (6562)
(→ 85)
Response time empty pipe detection (1859)
(→ 85)
Empty pipe adjust value (6527)
Full pipe adjust value (6548)
Measured value EPD (6559)
▶ Empty pipe adjust
New adjustment (6560)
(→ 85)
▶ Electrode cleaning circuit
(→ 91)
Electrode cleaning circuit (6528)
(→ 92)

ECC duration (6555) (→ 92)

ECC recovery time (6556) (→ 92)

ECC cleaning cycle (6557) (→ 92)

ECC Polarity (6631) (→ 92)

▶ **External compensation**

Density source (6615)

External density (6630)

Fixed density (6623)

▶ **Sensor adjustment** (→ 87)

Installation direction (1809) (→ 87)

Integration time (6533)

Measuring period (6536)

▶ **Process variable adjustment**

Volume flow offset (1831)

Volume flow factor (1832)

Mass flow offset (1841)

Mass flow factor (1846)

Conductivity offset (1848)

Conductivity factor (1849)

▶ **Calibration**

Nominal diameter (2807)

Calibration factor (6522)

Zero point (6546)

Calibration date/time (2822)

Calibration factor (2867)

Conductivity calibration factor (6718)
► Logbook
Calibration counter (2750)
Calibration date/time (2814)
Calibration date/time (2814)
Calibration date/time (2814)
Calibration date/time (2814)
Calibration date/time (2814)
Calibration date/time (2814)
Calibration date/time (2814)
Calibration date/time (2814)
Calibration date/time (2814)
Calibration date/time (2814)
Calibration date/time (2814)
Calibration date/time (2814)
Calibration date/time (2814)
Calibration date/time (2814)
Calibration date/time (2814)
Calibration factor (2809)
Calibration factor (2809)
Calibration factor (2809)
Calibration factor (2809)
Calibration factor (2809)
Calibration factor (2809)
Calibration factor (2809)

Calibration factor (2809)

Calibration factor (2809)

Calibration factor (2809)

Calibration factor (2809)

Calibration factor (2809)

Calibration factor (2809)

Calibration factor (2809)

Calibration factor (2809)

▶ **Testpoints**

Flow velocity (6510)

Raw volume flow (6704)

Electronic temperature (6501)

Current difference potential (6568)

Current potential electrode 1 (6569)

Current potential electrode 2 (6676)

Current potential electrode Pipe GND (6511)

Current integration time (6572)

Current measuring period (6580)

Current gain mode (6584)

AC mains synchronisation (6678)

▶ **Properties**

Nominal diameter (6599)

Tube inner diameter (6502)

Conductivity measurement possible (6513)

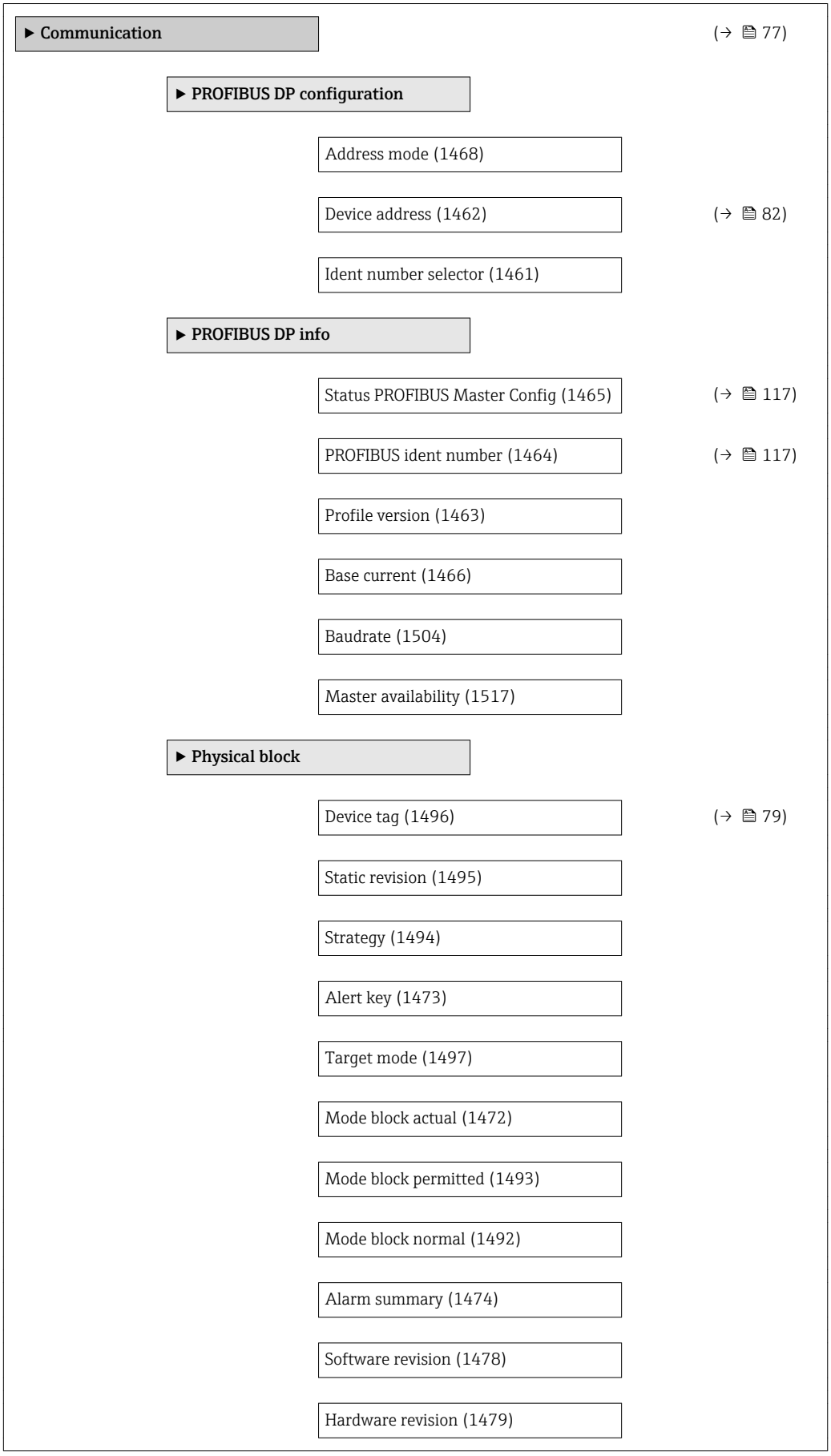
▶ Communication
(→ 77)
▶ PROFIBUS DP configuration
Address mode (1468)
Device address (1462)
(→ 82)
Ident number selector (1461)
▶ PROFIBUS DP info
Status PROFIBUS Master Config (1465)
(→ 117)
PROFIBUS ident number (1464)
(→ 117)
Profile version (1463)
Base current (1466)
Baudrate (1504)
Master availability (1517)
▶ Physical block
Device tag (1496)
(→ 79)
Static revision (1495)
Strategy (1494)
Alert key (1473)
Target mode (1497)
Mode block actual (1472)
Mode block permitted (1493)
Mode block normal (1492)
Alarm summary (1474)
Software revision (1478)
Hardware revision (1479)

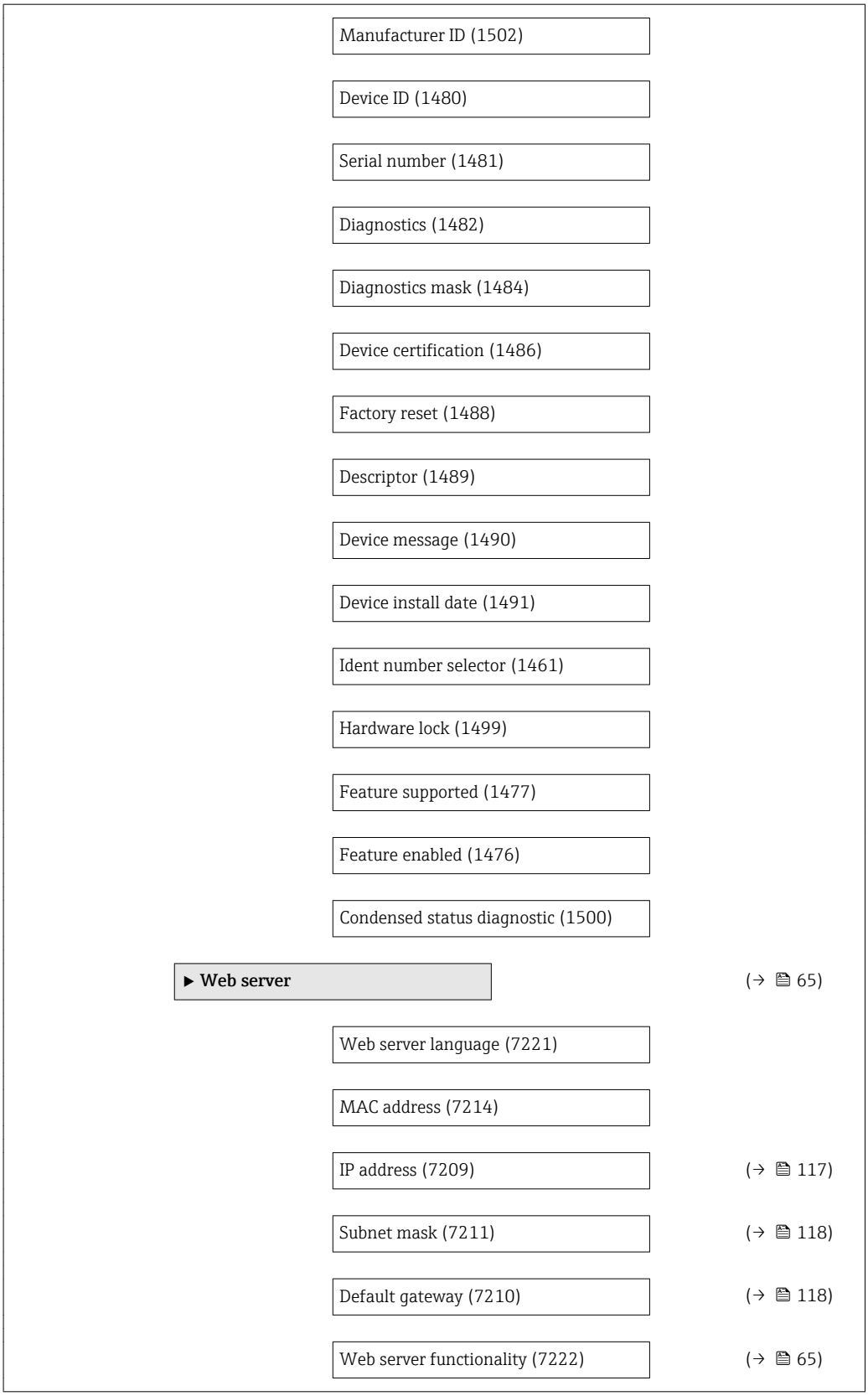
Manufacturer ID (1502)
Device ID (1480)
Serial number (1481)
Diagnostics (1482)
Diagnostics mask (1484)
Device certification (1486)
Factory reset (1488)
Descriptor (1489)
Device message (1490)
Device install date (1491)
Ident number selector (1461)
Hardware lock (1499)
Feature supported (1477)
Feature enabled (1476)
Condensed status diagnostic (1500)
▶ Web server
(→ 65)
Web server language (7221)
MAC address (7214)
IP address (7209)
(→ 117)
Subnet mask (7211)
(→ 118)
Default gateway (7210)
(→ 118)
Web server functionality (7222)
(→ 65)

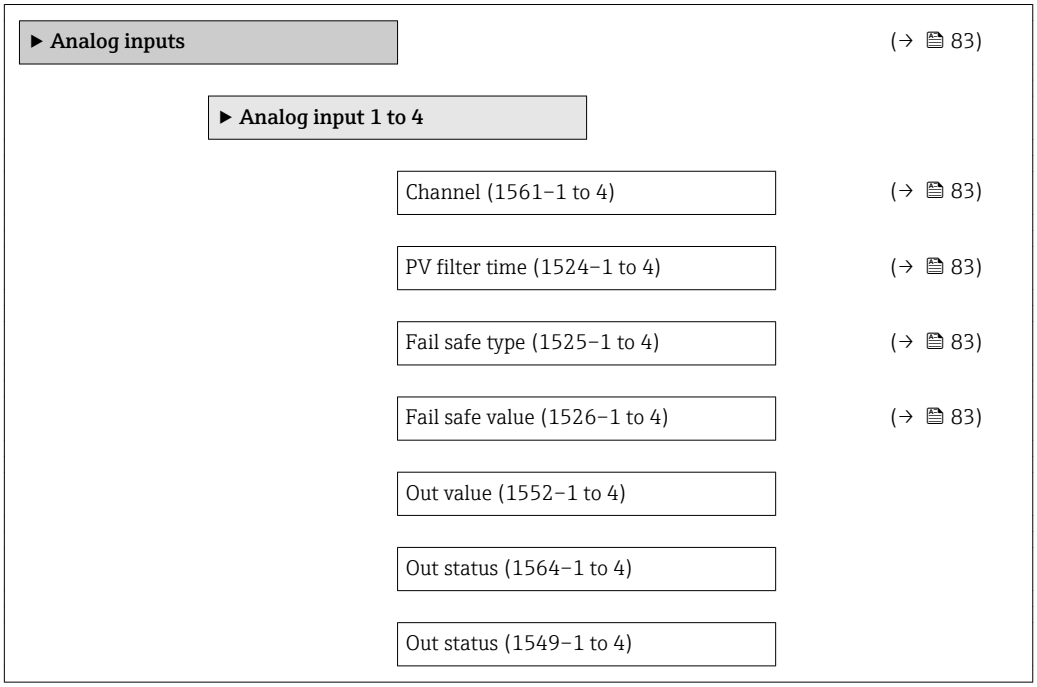
▶ Analog inputs
(→ 83)
▶ Analog input 1 to 4
Channel (1561–1 to 4)
(→ 83)
PV filter time (1524–1 to 4)
(→ 83)
Fail safe type (1525–1 to 4)
(→ 83)
Fail safe value (1526–1 to 4)
(→ 83)
Out value (1552–1 to 4)
Out status (1564–1 to 4)
Out status (1549–1 to 4)

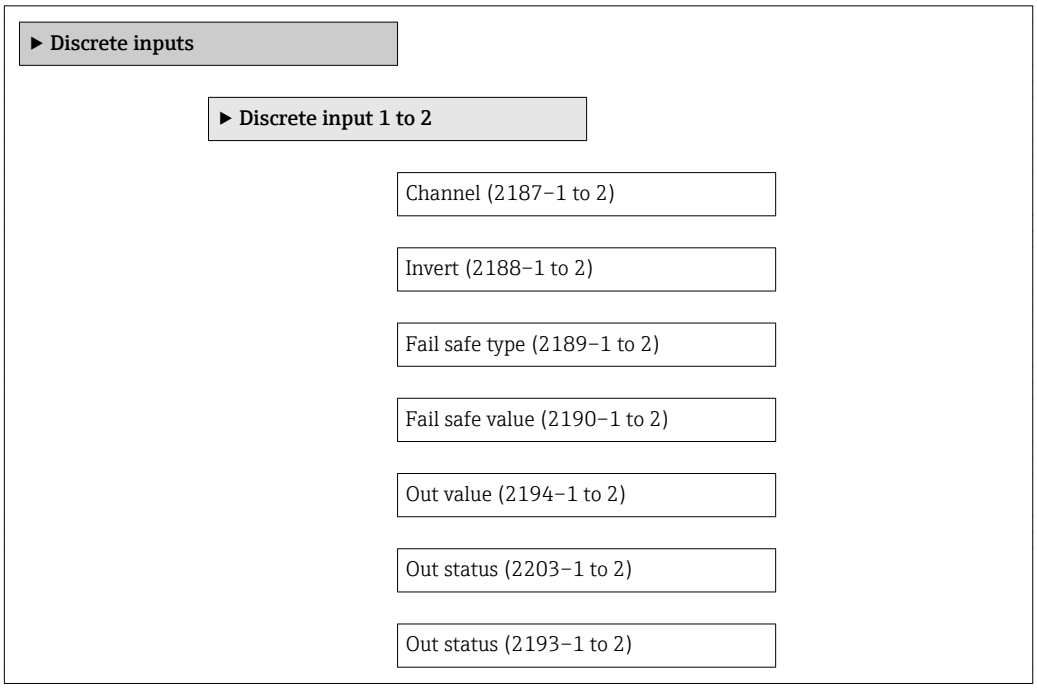
▶ Discrete inputs
▶ Discrete input 1 to 2
Channel (2187–1 to 2)
Invert (2188–1 to 2)
Fail safe type (2189–1 to 2)
Fail safe value (2190–1 to 2)
Out value (2194–1 to 2)
Out status (2203–1 to 2)
Out status (2193–1 to 2)

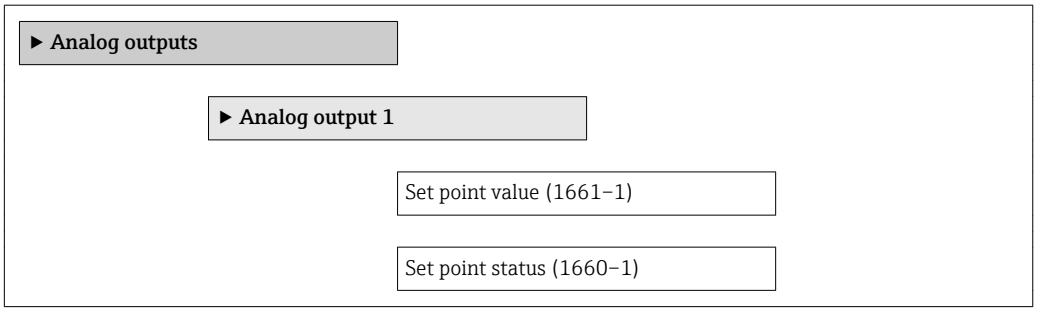
▶ Analog outputs
▶ Analog output 1
Set point value (1661–1)
Set point status (1660–1)

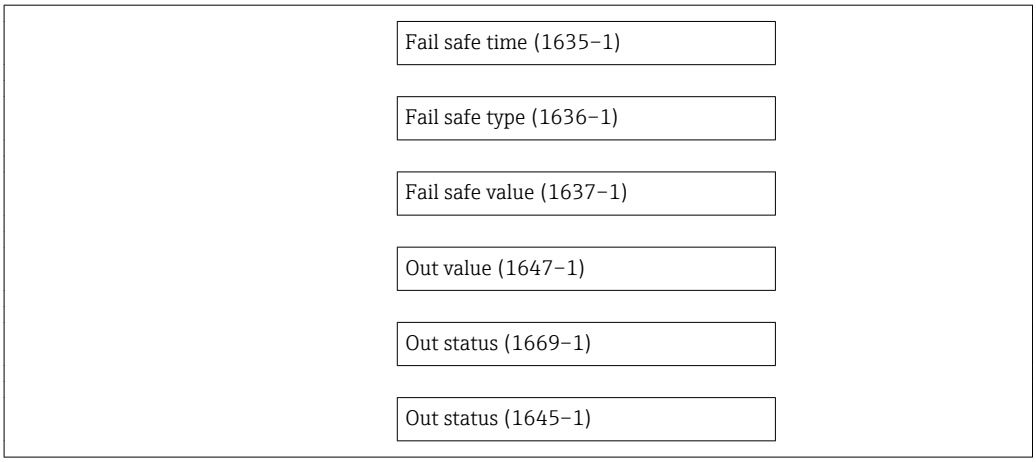
Fail safe time (1635–1)
Fail safe type (1636–1)
Fail safe value (1637–1)
Out value (1647–1)
Out status (1669–1)
Out status (1645–1)

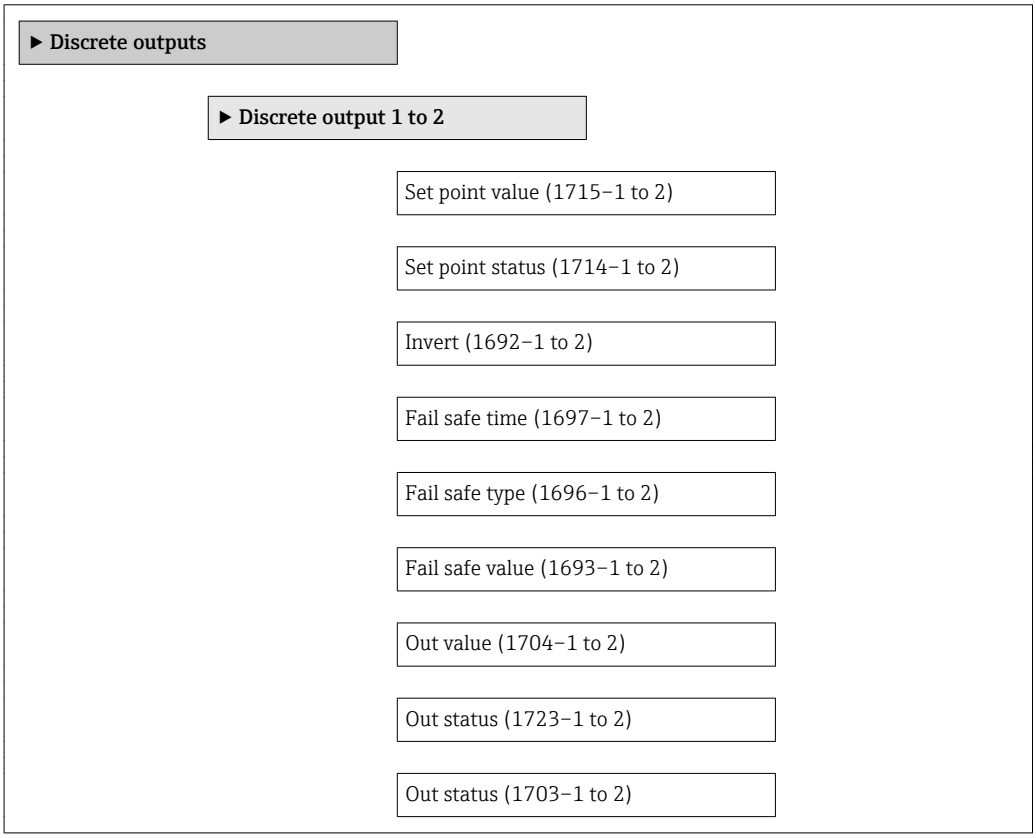
▶ Discrete outputs
▶ Discrete output 1 to 2
Set point value (1715–1 to 2)
Set point status (1714–1 to 2)
Invert (1692–1 to 2)
Fail safe time (1697–1 to 2)
Fail safe type (1696–1 to 2)
Fail safe value (1693–1 to 2)
Out value (1704–1 to 2)
Out status (1723–1 to 2)
Out status (1703–1 to 2)

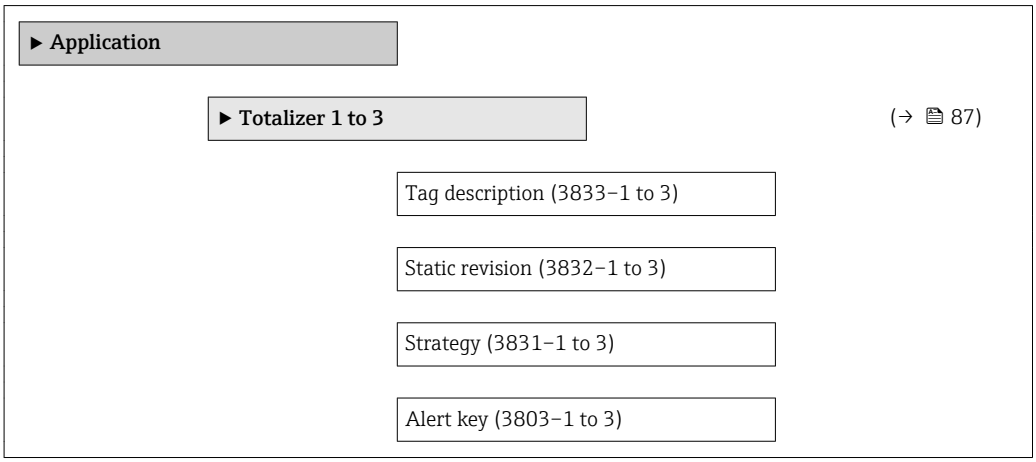
▶ Application
▶ Totalizer 1 to 3
(→ 87)
Tag description (3833–1 to 3)
Static revision (3832–1 to 3)
Strategy (3831–1 to 3)
Alert key (3803–1 to 3)

Target mode (3834–1 to 3)
Mode block actual (3801–1 to 3)
Mode block permitted (3828–1 to 3)
Mode block normal (3824–1 to 3)
Alarm summary (3809–1 to 3)
Batch ID (3804–1 to 3)
Batch operation (3805–1 to 3)
Batch phase (3806–1 to 3)
Batch Recipe Unit Procedure (3807–1 to 3)
Totalizer value 1 to 3 (3827–1 to 3) (→ 97)
Totalizer status 1 to 3 (3826–1 to 3) (→ 97)
Totalizer status (Hex) 1 to 3 (3825–1 to 3) (→ 97)
Unit totalizer (3835–1 to 3) (→ 87)
Assign process variable (3808–1 to 3) (→ 87)
Control Totalizer 1 to 3 (3830–1 to 3) (→ 88)
Totalizer operation mode (3823–1 to 3) (→ 88)
Failure mode (3810–1 to 3) (→ 88)
Preset value 1 to 3 (3829–1 to 3) (→ 98)
Alarm hysteresis (3802–1 to 3)
Hi Hi Lim (3815–1 to 3)
Hi Lim (3816–1 to 3)
Lo Lim (3819–1 to 3)
Lo Lo Lim (3822–1 to 3)
Hi Hi alarm value (3814–1 to 3)

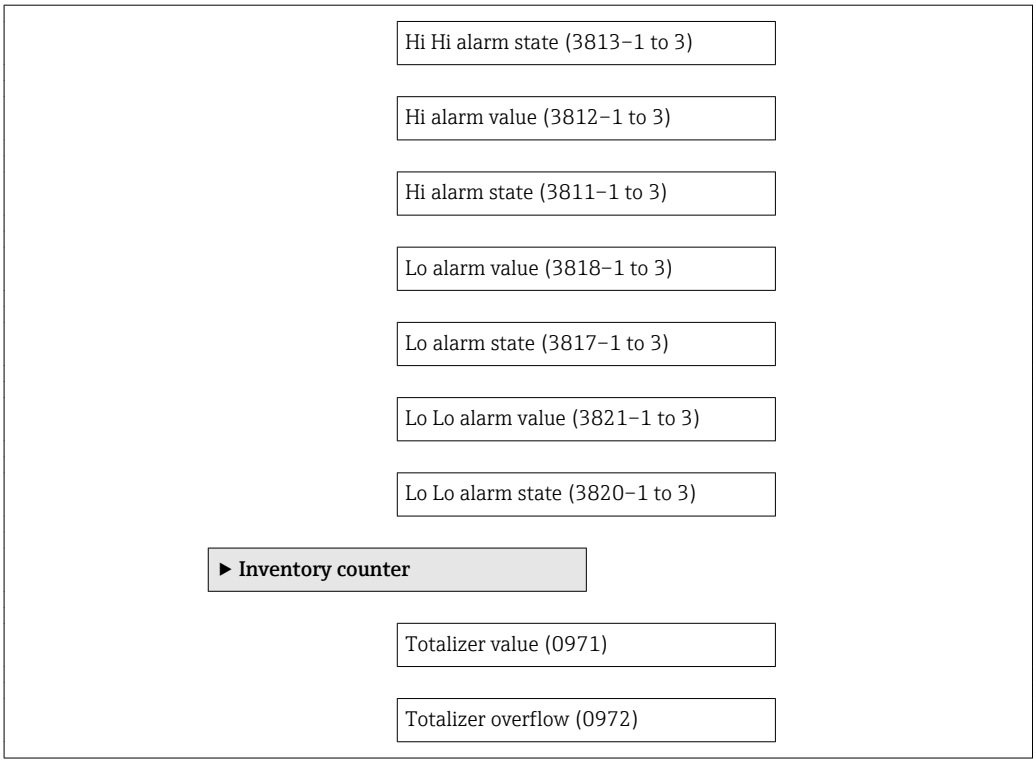
Hi Hi alarm state (3813–1 to 3)
Hi alarm value (3812–1 to 3)
Hi alarm state (3811–1 to 3)
Lo alarm value (3818–1 to 3)
Lo alarm state (3817–1 to 3)
Lo Lo alarm value (3821–1 to 3)
Lo Lo alarm state (3820–1 to 3)
▶ Inventory counter
Totalizer value (0971)
Totalizer overflow (0972)

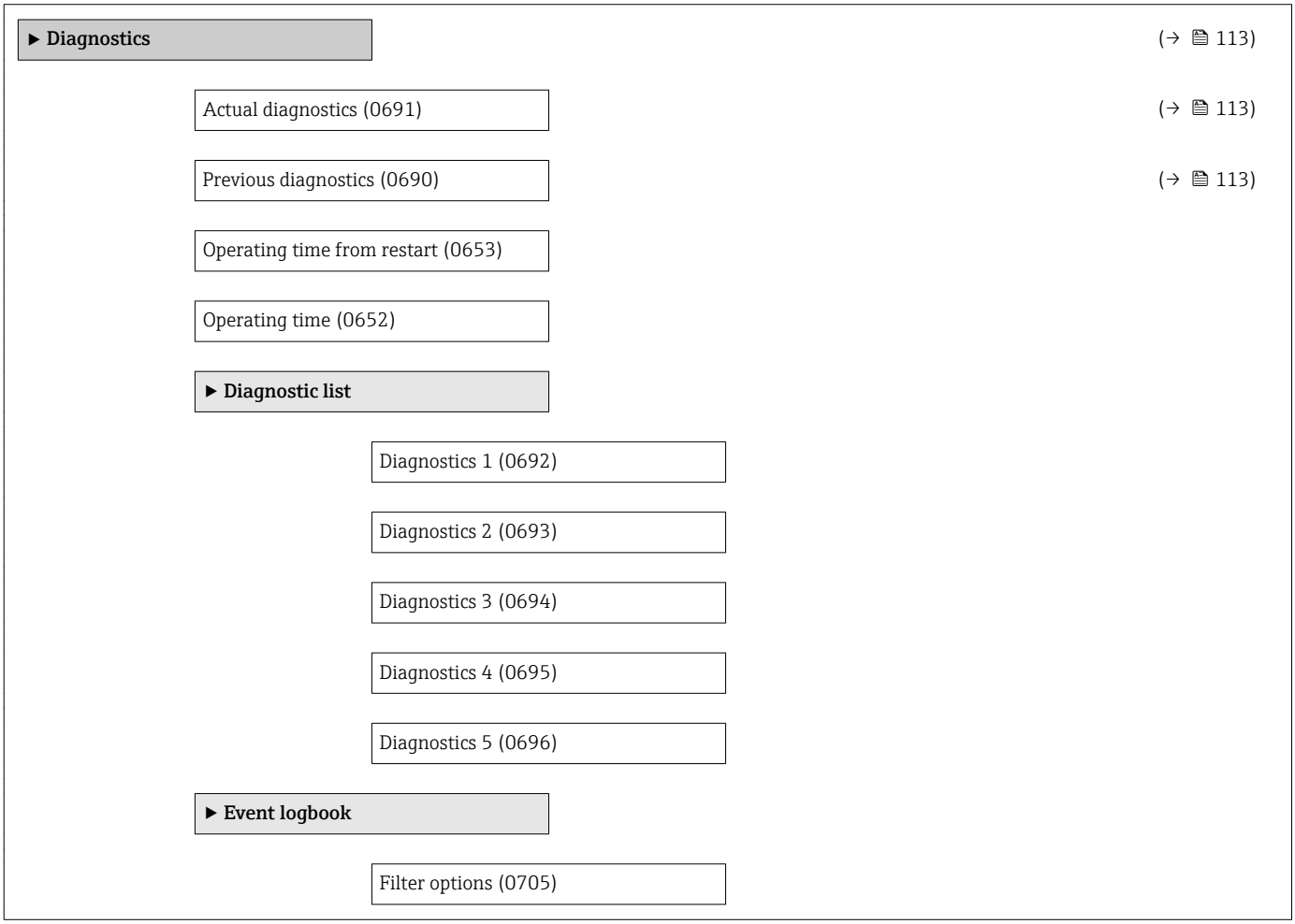
▶ Diagnostics
(→ 113)
Actual diagnostics (0691)
(→ 113)
Previous diagnostics (0690)
(→ 113)
Operating time from restart (0653)
Operating time (0652)
▶ Diagnostic list
Diagnostics 1 (0692)
Diagnostics 2 (0693)
Diagnostics 3 (0694)
Diagnostics 4 (0695)
Diagnostics 5 (0696)
▶ Event logbook
Filter options (0705)

Clear event list (0706)

▶ **Event list**

▶ **Device information** (→ 116)

Device tag (0011) (→ 117)

Serial number (0009) (→ 117)

Firmware version (0010) (→ 117)

Device name (0013) (→ 117)

Order code (0008) (→ 117)

Extended order code 1 (0023) (→ 117)

Extended order code 2 (0021) (→ 117)

Extended order code 3 (0022) (→ 117)

ENP version (0012) (→ 117)

IP address (7209) (→ 117)

Subnet mask (7211) (→ 118)

Default gateway (7210) (→ 118)

▶ **Sensor module**

Hardware revision (0074)

Module name (0077)

Serial number (0071)

▶ **Mainboard module**

Software revision (0072)

Build no. software (0079)

Hardware revision (0074)

Module name (0077)

Serial number (0071)

Bootloader revision (0073)

▶ **Sensor electronic module**

Software revision (0072)

Build no. software (0079)

Hardware revision (0074)

Module name (0077)

Serial number (0071)

Bootloader revision (0073)

▶ **I/O module**

Software revision (0072)

Build no. software (0079)

Hardware revision (0074)

Module name (0077)

Serial number (0071)

Bootloader revision (0073)

▶ **Display module**

Software revision (0072)

Build no. software (0079)

Hardware revision (0074)

Module name (0077)

Serial number (0071)

Bootloader revision (0073)

▶ **Data logging** (→ 98)

Assign channel 1 (0851) (→ 100)

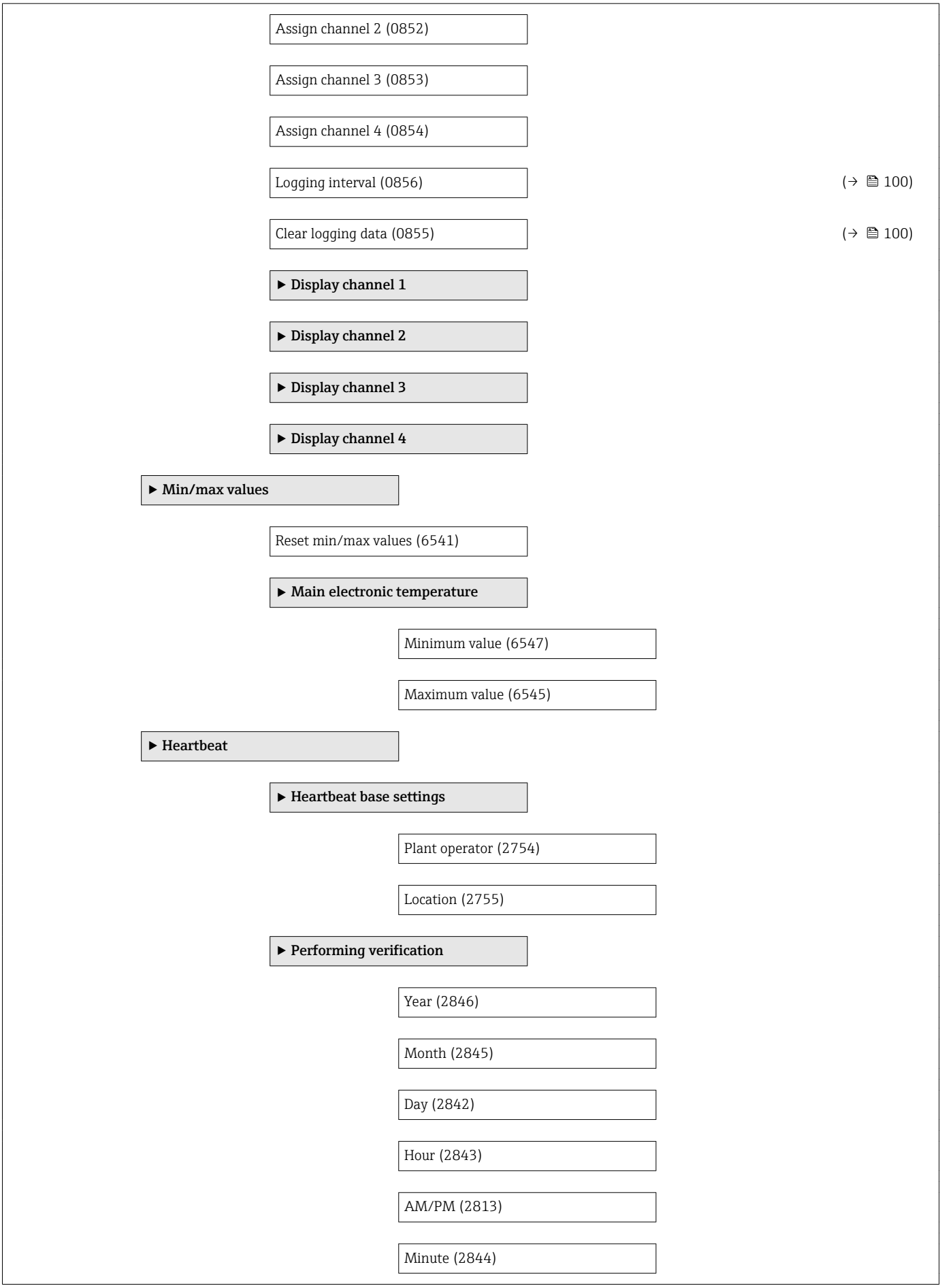
Assign channel 2 (0852)
Assign channel 3 (0853)
Assign channel 4 (0854)
Logging interval (0856)
(→ 100)
Clear logging data (0855)
(→ 100)
▶ Display channel 1
▶ Display channel 2
▶ Display channel 3
▶ Display channel 4
▶ Min/max values
Reset min/max values (6541)
▶ Main electronic temperature
Minimum value (6547)
Maximum value (6545)
▶ Heartbeat
▶ Heartbeat base settings
Plant operator (2754)
Location (2755)
▶ Performing verification
Year (2846)
Month (2845)
Day (2842)
Hour (2843)
AM/PM (2813)
Minute (2844)

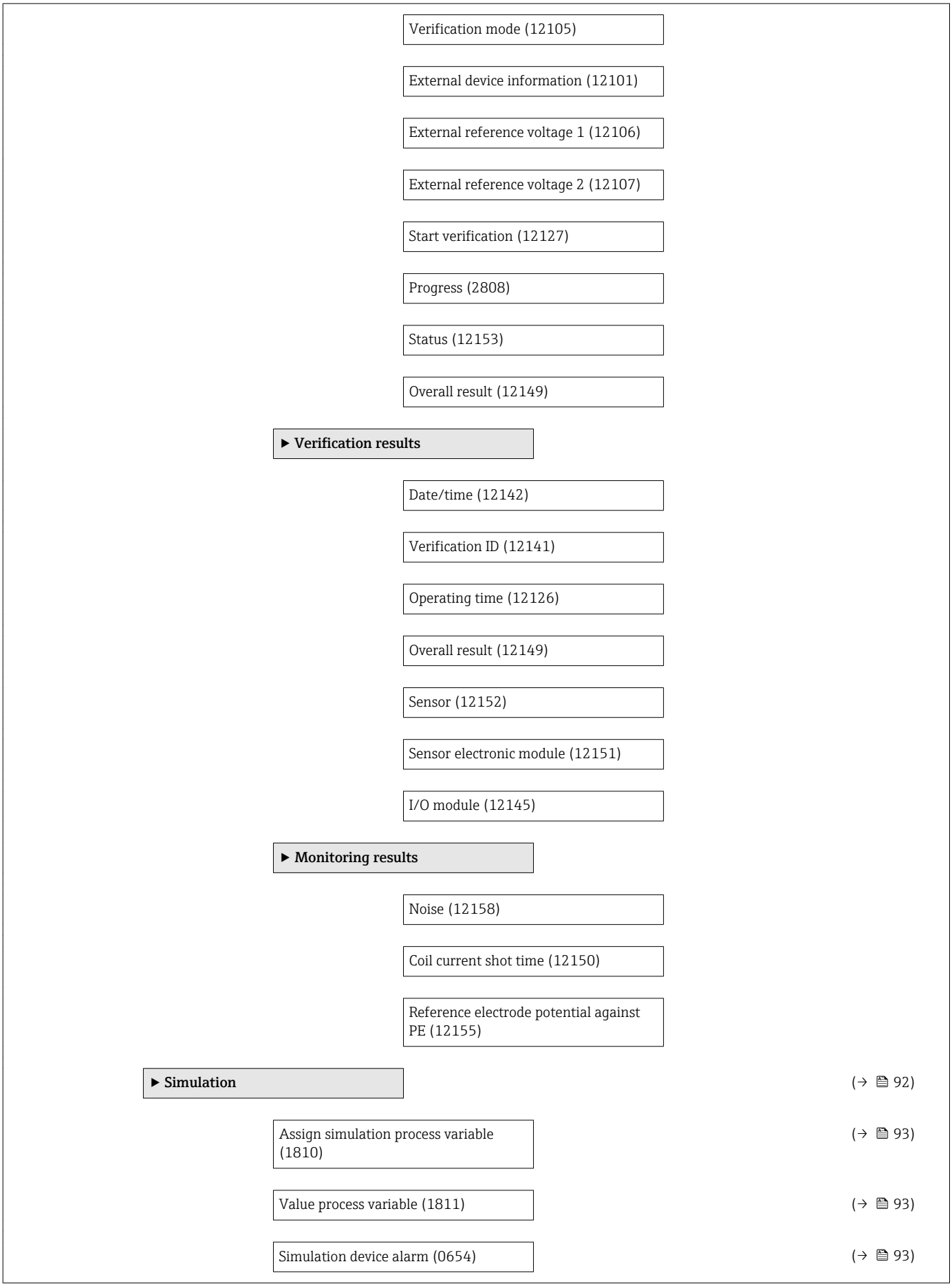
Verification mode (12105)
External device information (12101)
External reference voltage 1 (12106)
External reference voltage 2 (12107)
Start verification (12127)
Progress (2808)
Status (12153)
Overall result (12149)
▶ Verification results
Date/time (12142)
Verification ID (12141)
Operating time (12126)
Overall result (12149)
Sensor (12152)
Sensor electronic module (12151)
I/O module (12145)
▶ Monitoring results
Noise (12158)
Coil current shot time (12150)
Reference electrode potential against PE (12155)
▶ Simulation
(→ 92)
Assign simulation process variable (1810)
(→ 93)
Value process variable (1811)
(→ 93)
Simulation device alarm (0654)
(→ 93)

	Simulation diagnostic event (0704)	
	Diagnostic event category (0738)	(→ 93)
	Simulation diagnostic event (0737)	(→ 93)

Index

A

Access authorization to parameters
- Read access . . . 61
- Write access . . . 61

Access code . . . 61
- Incorrect input . . . 61

Adapters . . . 22
Adapting the diagnostic behavior . . . 108
Ambient temperature range . . . 21
Application . . . 9, 124
Applicator . . . 124
Approvals . . . 152

B

Buried applications . . . 23

C

C-Tick symbol . . . 152
Cable entries
- Technical data . . . 129

Cable entry
- Degree of protection . . . 46

CE mark . . . 10, 152
Certificates . . . 152
Certification PROFIBUS . . . 152
Checklist
- Post-connection check . . . 47
- Post-installation check . . . 34

Cleaning
- Exterior cleaning . . . 119
- Interior cleaning . . . 119

Commissioning . . . 77
- Advanced settings . . . 86
- Configuring the measuring device . . . 78

Compatibility with earlier model . . . 69
Conductivity . . . 133
Connecting cable . . . 35
Connecting the measuring device . . . 40
Connection
- see Electrical connection

Connection examples, potential equalization . . . 43
Connection preparations . . . 38
Connection tools . . . 35
Context menu
- Closing . . . 56
- Explanation . . . 56
- Opening . . . 56

Current consumption . . . 129
Cyclic data transmission . . . 71

D

Declaration of Conformity . . . 10
Define access code . . . 93, 94
Degree of protection . . . 46, 132
Design
- Measuring device . . . 12

Designated use . . . 9
Device components . . . 12
Device description files . . . 69
Device documentation
- Supplementary documentation . . . 8

Device locking, status . . . 96
Device master file
- GSD . . . 69

Device name
- Sensor . . . 15
- Transmitter . . . 14

Device repair . . . 120
Device revision . . . 69
Device type ID . . . 69
Diagnostic behavior
- Explanation . . . 105
- Symbols . . . 105

Diagnostic information
- Design, description . . . 105, 108
- FieldCare . . . 107
- Light emitting diodes . . . 102
- Local display . . . 104
- Overview . . . 110
- Remedial measures . . . 110
- Web browser . . . 106

Diagnostic list . . . 113
Diagnostic message . . . 104
Diagnostics
- Symbols . . . 104

Diagnostics (Menu) . . . 160
DIP switch
- see Write protection switch

Direct access . . . 58
Direct access code . . . 53
Disabling write protection . . . 93
Display
- Current diagnostic event . . . 113
- Previous diagnostic event . . . 113
- see Local display

Display area
- For operational display . . . 51
- In the navigation view . . . 53

Display values
- For locking status . . . 96

Disposal . . . 120
Document
- Function . . . 6
- Symbols used . . . 6

Document function . . . 6
Down pipe . . . 19
Drinking water approval . . . 152

E

ECC . . . 91
Electrical connection
- Degree of protection . . . 46

Measuring device 35
Operating tools
Via PROFIBUS DP network 66, 151
Via service interface (CDI-RJ45) 66
Web server 66
Electromagnetic compatibility 132
Enabling write protection 93
Endress+Hauser services
Maintenance 119
Repair 120
Environment
Ambient temperature 21
Mechanical load 132
Shock resistance 132
Storage temperature 132
Vibration resistance 132
Error messages
see Diagnostic messages
Event history 114
Events list 114
Ex approval 152
Expert (Menu) 164
Extended order code
Sensor 15
Transmitter 14
Exterior cleaning 119

F
Field of application
Residual risks 10
FieldCare 67
Device description file 69
Establishing a connection 67
Function 67
User interface 68
Filtering the event logbook 114
Firmware
Release date 69
Version 69
Firmware history 118
Fitted electrodes 149
Flow direction 20
Flow limit 133
Function check 77
Functions
see Parameter

G
Galvanic isolation 128

H
Hardware write protection 94
Help text
Calling up 59
Close 59
Explanation 59

I
I/O electronics module 12, 42
Identifying the measuring device 13
Immersion in water 23
Incoming acceptance 13
Information on the document 6
Inlet runs 20
Input 124
Input mask 54
Inspection
Installation 34
Received goods 13
Inspection check
Connection 47
Installation 19
Installation conditions
Adapters 22
Buried applications 23
Down pipe 19
Immersion in water 23
Inlet and outlet runs 20
Mounting location 19
Orientation 20
Partially filled pipe 19
System pressure 21
Vibrations 22
Installation dimensions 21
Interior cleaning 119

K
Keypad lock
Disabling 61
Enabling 61

L
Languages, operation options 152
Line recorder 98
Local display 150
Editing view 54
Navigation view 52
see Diagnostic message
see In alarm condition
see Operational display
Low flow cut off 127

M
Main electronics module 12
Maintenance tasks 119
Replacing seals 119
Manufacturer ID 69
Manufacturing date 14, 15
Materials 147
Maximum measured error 130
Measured variables
Calculated 124
Measured 124
see Process variables
Measuring and test equipment 119
Measuring device
Configuration 78
Conversion 120
Design 12

Disposal 121
Integrating via HART protocol 69
Mounting the sensor 24
Mounting the ground cable/ground disks 25
Mounting the seals 25
Screw tightening torques 25
Preparing for electrical connection 38
Preparing for mounting 24
Removing 120
Repair 120
Switch-on 77
Measuring instrument approval 152
Measuring principle 124
Measuring range 124
Measuring system 124
Measuring tube specification 146
Mechanical load 132
Media 9
Medium temperature range 133
Menu
Diagnostics 113, 160
Expert 164
Operation 96, 156
Setup 79, 157
Menus
For measuring device configuration 78
For specific settings 86
Mounting dimensions
see Installation dimensions
Mounting location 19
Mounting preparations 24
Mounting requirements
Installation dimensions 21
Mounting tools 24

N

Nameplate
Sensor 15
Transmitter 14
Navigation path (navigation view) 52
Navigation view
In the submenu 52
In the wizard 52
Numeric editor 54

O

Operable flow range 126
Operating elements 55, 105
Operating keys
see Operating elements
Operating menu
Menus, submenus 49
Overview of menus with parameters 156
Structure 49
Submenus and user roles 50
Operating philosophy 50
Operation 96
Operation (Menu) 156
Operation options 48
Operational display 51
Operational safety 10
Order code 14, 15
Orientation (vertical, horizontal) 20
Outlet runs 20
Output 127
Output signal 127
Overview
Operating menu 156

P

Packaging disposal 18
Parameter
Changing 60
Enter a value 60
Parameter settings
Administration (Submenu) 115
Analog inputs (Submenu) 83
Communication (Submenu) 82
Data logging (Submenu) 98
Device information (Submenu) 116
Diagnostics (Menu) 113
Display (Submenu) 89
Display (Wizard) 80
Electrode cleaning circuit (Submenu) 91
Empty pipe detection (Wizard) 85
Low flow cut off (Wizard) 83
Operation (Submenu) 98
Process variables (Submenu) 96
Sensor adjustment (Submenu) 87
Setup (Menu) 79
Simulation (Submenu) 92
System units (Submenu) 79
Totalizer (Submenu) 97
Totalizer 1 to 3 (Submenu) 87
Web server (Submenu) 65
Partially filled pipe 19
Performance characteristics 130
Post-connection check (checklist) 47
Post-installation check 77
Post-installation check (checklist) 34
Potential equalization 43
Power consumption 129
Power supply failure 129
Pressure loss 133
Pressure tightness 133
Pressure-temperature ratings 133
Process conditions
Conductivity 133
Flow limit 133
Medium temperature 133
Pressure loss 133
Pressure tightness 133
Process connections 150
Product safety 10
Protecting parameter settings 93

R

Read access 61

Reading measured values 96
Recalibration 119
Reference operating conditions 130
Registered trademarks 8
Remedial measures
Calling up 105
Closing 105
Remote operation 151
Remote version
Connecting the signal cables 40
Repair 120
Notes 120
Repair of a device 120
Repeatability 131
Replacement
Device components 120
Replacing seals 119
Requirements for personnel 9
Return 120

S

Safety 9
Screw tightening torques 25
Sensor
Mounting 24
Sensor (Submenu) 167
Serial number 14, 15
Service interface (CDI-RJ45) 151
Setting the operating language 77
Settings
Adapting the measuring device to the process conditions 97
Advanced display configurations 89
Analog input 83
Communication interface 82
Device reset 115
Device tag 79
Electrode cleaning circuit (ECC) 91
Empty pipe detection (EPD) 85
Local display 80
Low flow cut off 83
Operating language 77
Resetting the totalizer 98
Sensor adjustment 87
Simulation 92
System units 79
Totalizer 87
Totalizer reset 98
Setup (Menu) 157
Shock resistance 132
Showing data logging 98
Signal on alarm 127
Software release 69
Spare part 120
Spare parts 120
Special connection instructions 45
Standards and guidelines 152
Status area
For operational display 51
In the navigation view 53
Status signals 104, 106
Storage conditions 17
Storage temperature 17
Storage temperature range 132
Structure
Operating menu 49
Submenu
Administration 115
Advanced setup 86
Analog inputs 83
Communication 77, 82
Data logging 98
Define access code 93
Device information 116
Display 89
Electrode cleaning circuit 91
Events list 114
Operation 98
Overview 50
Process variables 96
Sensor 167
Sensor adjustment 87
Simulation 92
System 165
System units 79
Totalizer 97
Totalizer 1 to 3 87
Web server 65
Supplementary documentation 154
Supply voltage 129
Surface roughness 150
Symbols
For communication 51
For correction 54
For diagnostic behavior 51
For locking 51
For measured variable 51
For measurement channel number 51
For menus 53
For parameters 53
For status signal 51
For submenu 53
For wizard 53
In the status area of the local display 51
In the text and numeric editor 54
System (Submenu) 165
System design
Measuring system 124
see Measuring device design
System integration 69
System pressure 21

T

Technical data, overview 124
Temperature range
Ambient temperature range for display 150
Storage temperature 17
Terminal assignment 37, 40, 42

Terminals 129
Text editor 54
Tool tip
see Help text
Tools
Electrical connection 35
For mounting 24
Transport 17
Transmitter
Connecting the signal cables 42
Turning the display module 33
Turning the housing 31
Transporting the measuring device 17
Troubleshooting
General 101
Turning the display module 33
Turning the electronics housing
see Turning the transmitter housing
Turning the transmitter housing 31

U

Use of the measuring device
Borderline cases 9
Incorrect use 9
see Designated use
User roles 50

V

Version data for the device 69
Vibration resistance 132
Vibrations 22

W

W@M 119, 120
W@M Device Viewer 13, 120
Weight
Compact version 134
Sensor remote version 140
Transport (notes) 17
Wizard
Define access code 93
Display 80
Empty pipe detection 85
Low flow cut off 83
Workplace safety 10
Write access 61
Write protection
Via access code 93
Via write protection switch 94
Write protection switch 94

www.addresses.endress.com

Endress+Hauser

People for Process Automation