Level Pressure Flow Temperature Liquid Analysis Registration Systems Components Services Solutions

Operating Instructions

Proline Promass 40

Coriolis Mass Flow Measuring System

HART® FIELD COMMUNICATION PROTOCOL

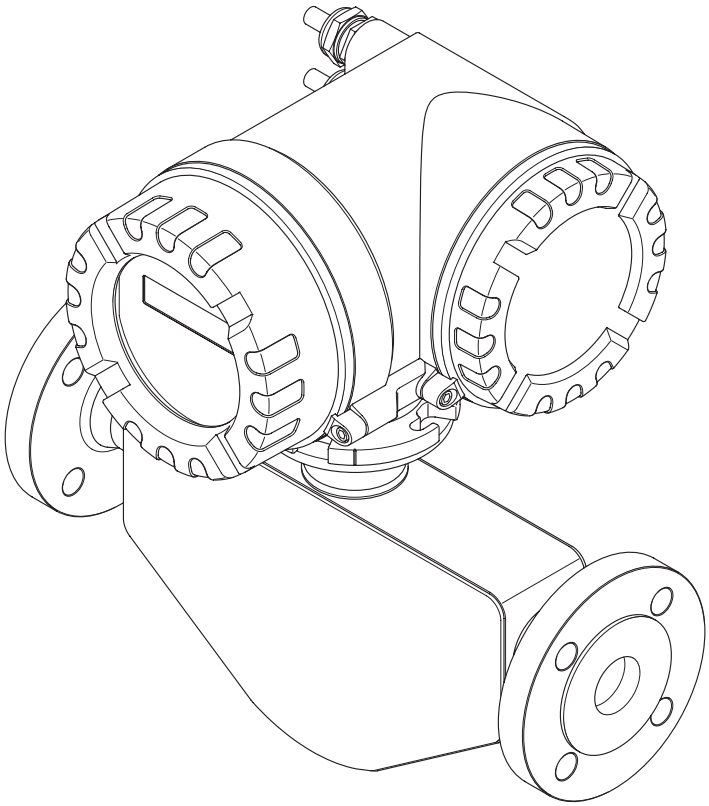

BA061D/06/en/03.10
71111274

Valid as of version:
V 3.01.XX (Device software)

Endress+Hauser
People for Process Automation

Table of Contents

1 Safety instructions

1.1 Designated use

The measuring device described in these Operating Instructions is to be used only for measuring the mass flow rate or volume flow rate of liquids and gases. Fluids with widely differing properties can be measured, for example:

- additives
- oils, fats
- acids, alkalis
- lacquers, paints
- suspensions
- gases.

Resulting from incorrect use or from use other than that designated the operational safety of the measuring devices can be suspended. The manufacturer accepts no liability for damages being produced from this.

1.2 Installation, commissioning and operation

Note the following points:

- Installation, connection to the electricity supply, commissioning and maintenance of the device must be carried out by trained, qualified specialists authorized to perform such work by the facility's owner operator. The specialist must have read and understood this Operating Instruction and must follow the instructions it contains.
- The device must be operated by persons authorized and trained by the facility’s owner operator. Strict compliance with the instructions in the Operating Instruction is mandatory.
- Endress+Hauser is willing to assist in clarifying the chemical resistance properties of parts wetted by special fluids, including fluids used for cleaning. However, small changes in temperature, concentration or the degree of contamination in the process can result in changes of the chemical resistance properties. Therefore, Endress+Hauser can not guarantee or accept liability for the chemical resistance properties of the fluid wetted materials in a specific application. The user is responsible for the choice of fluid wetted materials in regards to their in-process resistance to corrosion.
- If carrying out welding work on the piping, the welding unit may not be grounded by means of the measuring device.
- The installer must ensure that the measuring system is correctly wired in accordance with the wiring diagrams. The transmitter must be earthed unless special protection measures have been taken e.g. galvanically isolated power supply SELV or PELV! (SELV = Save Extra Low Voltage; PELV = Protective Extra Low Voltage).
- Invariably, local regulations governing the opening and repair of electrical devices apply.

1.3 Operational safety

Note the following points:

- Measuring systems for use in hazardous environments are accompanied by separate "Ex documentation", which is an integral part of this Operating Instruction.
  Strict compliance with the installation instructions and ratings as stated in this supplementary documentation is mandatory. The symbol on the front of this supplementary Ex documentation indicates the approval and the certification body (i.e. Ⓔx Europe, FM USA, CSA Canada).
- The measuring device complies with the general safety requirements in accordance with EN 61010-1, the EMC requirements of IEC/EN 61326 and NAMUR recommendation NE 21, NE 43 and NE 53.

- External surface temperature of the transmitter can increase by 10 K due to power consumption of internal electronical components. Hot process fluids passing through the measuring device will further increase the surface temperature of the measuring device. Especially the surface of the sensor can reach temperatures which are close to process temperature. Additionally safety precautions are required when increased process temperatures are present.
- The manufacturer reserves the right to modify technical data without prior notice. Your Endress+Hauser distributor will supply you with current information and updates to this Operating Instruction.

1.4 Return

The following procedures must be carried out before a flowmeter requiring repair or calibration, for example, is returned to Endress+Hauser:
- Always enclose a duly completed "Declaration of contamination" form.
  Only then can Endress+Hauser transport, examine and repair a returned device.
- Enclose special handling instructions if necessary, for example a safety data sheet as per Regulation (EC) No 1907/2006 REACH.
- Remove all residues. Pay special attention to the grooves for seals and crevices which could contain residues. This is particularly important if the substance is hazardous to health, e.g. flammable, toxic, caustic, carcinogenic, etc.

Note!
You will find a preprinted blank of the "Declaration of contamination" form at the back of this manual.

Warning!
- Do not return a measuring device if you are not absolutely certain that all traces of hazardous substances have been removed, e.g. substances which have penetrated crevices or diffused through plastic.
- Costs incurred for waste disposal and injury (burns, etc.) due to inadequate cleaning will be charged to the owner operator.

1.5 Notes on safety conventions and icons

The devices are designed to meet state-of-the-art safety requirements, have been tested, and left the factory in a condition in which they are safe to operate. The devices comply with the applicable standards and regulations in accordance with EN 61010-1 "Protection Measures for Electrical Equipment for Measurement, Control, Regulation and Laboratory Procedures". They can, however, be a source of danger if used incorrectly or for other than the designated use.
Consequently, always pay particular attention to the safety instructions indicated in this Operating Instruction by the following icons:

Warning!
"Warning" indicates an action or procedure which, if not performed correctly, can result in injury or a safety hazard. Comply strictly with the instructions and proceed with care.

Caution!
"Caution" indicates an action or procedure which, if not performed correctly, can result in incorrect operation or destruction of the device. Comply strictly with the instructions.

Note!
"Note" indicates an action or procedure which, if not performed correctly, can have an indirect effect on operation or trigger an unexpected response on the part of the device.

2 Identification

2.1 Device designation

The "Promass 40" flow measuring system consists of the following components:
- Promass 40 transmitter
- Promass E sensor

2.1.1 Nameplate of the transmitter

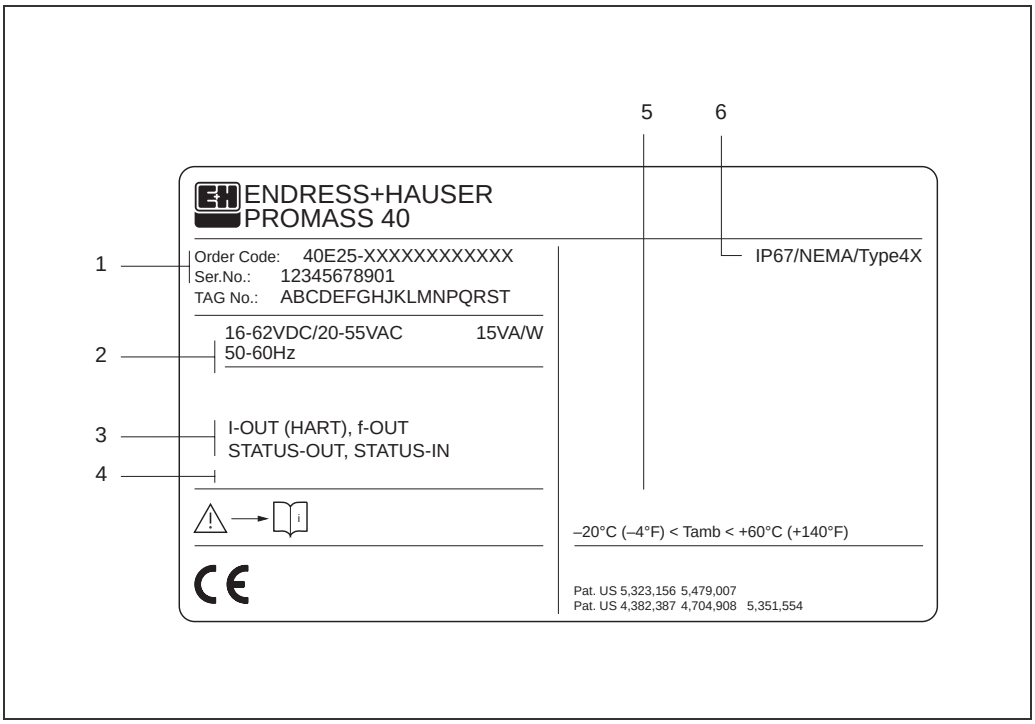

Fig. 1: Nameplate specifications for the "Promass 40" transmitter (example)

1 *Ordering code/serial number: See the specifications on the order confirmation for the meanings of the individual letters and digits.*
2 *Power supply / frequency: 16…62 V DC / 20…55 V AC / 50…60 Hz*
Power consumption: 15 VA / W
3 *Available inputs / outputs:*
I-OUT (HART): with current output (HART)
f-OUT: with pulse/frequency output
STATUS-IN: with status input (auxiliary input)
STATUS-OUT: with status output (switching output)
4 *Reserved for information on special products*
5 *Ambient temperature range*
6 *Degree of protection*

2.1.2 Nameplate of the sensor

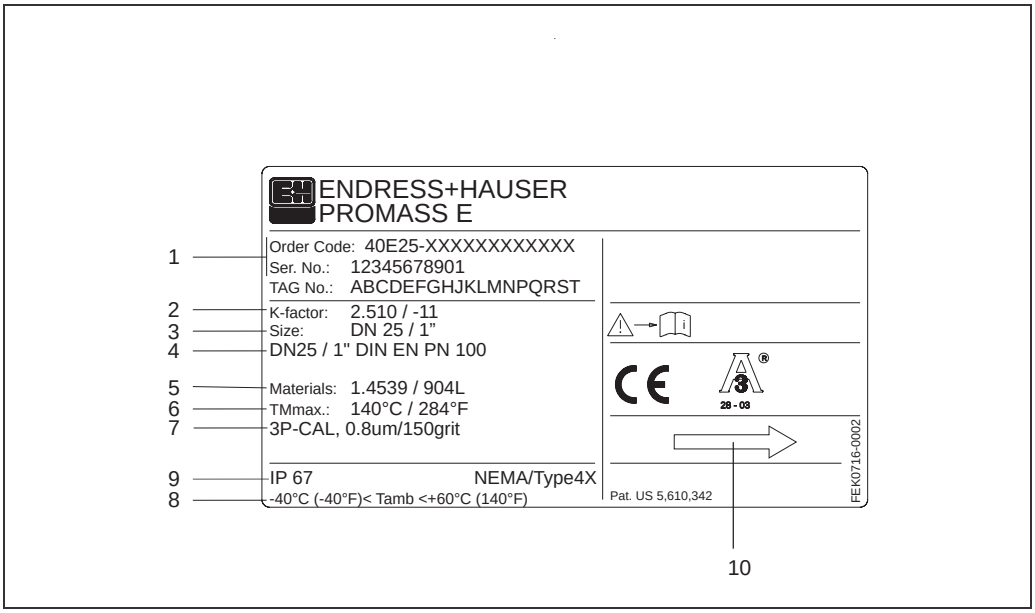

Fig. 2: Nameplate specifications for the "Promass E" sensor (example)

1 *Ordering code/serial number: See the specifications on the order confirmation for the meanings of the individual letters and digits.*
2 *Calibration factor with zero point*
3 *Nominal diameter device*
4 *Flange nominal diameter / Nominal pressure*
5 *Material of measuring tubes*
6 *Max. fluid temperature*
7 *Additional information (example):*
  – With 3-point calibration
  – With 3.1 B certification for fluid wetted materials
8 *Ambient temperature range*
9 *Degree of protection*
10 *Flow direction*

2.1.3 Nameplate for connections

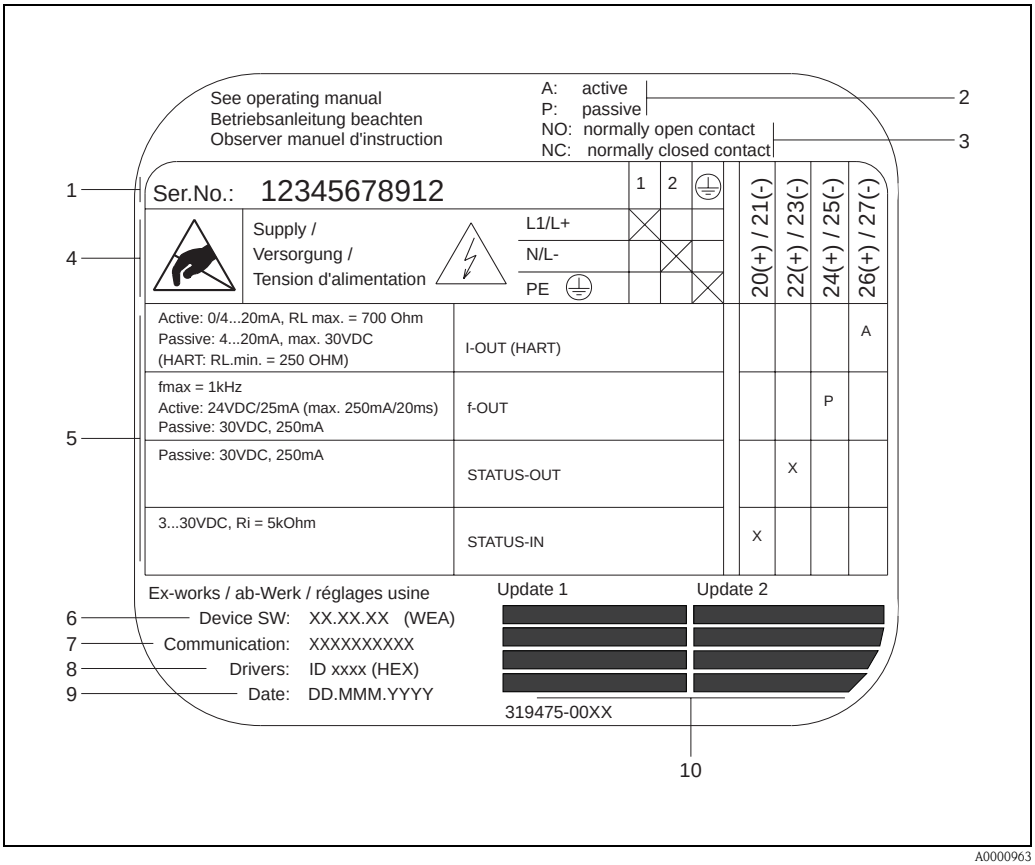

Fig. 3: Nameplate specifications for Proline transmitter (example)

1 *Serial number*
2 *Possible configuration of current output*
3 *Possible configuration of relay contacts*
4 *Terminal assignment, cable for power supply: 85…260 V AC, 20…55 V AC, 16…62 V DC*
Terminal ***No. 1****: L1 for AC, L+ for DC*
Terminal ***No. 2****: N for AC, L– for DC*
5 *Signals present at inputs and outputs, possible configuration and terminal assignment (20…27), see also "Electrical values of inputs/outputs"* *→ Page 56 ff.*
6 *Version of device software currently installed*
7 *Installed communication type, e.g. HART, PROFIBUS PA, etc.*
8 *Information on current communication software (Device Revision and Device Description), e.g. Dev. 01 / DD 01 for HART*
9 *Date of installation*
10 *Current updates to data specified in points 6 to 9*

2.2 Certificates and approvals

The devices are designed in accordance with good engineering practice to meet state-of-the-art safety requirements, have been tested, and left the factory in a condition in which they are safe to operate.

The devices comply with the applicable standards and regulations in accordance with EN 61010-1 "Protection Measures for Electrical Equipment for Measurement, Control, Regulation and Laboratory Procedures" and with the EMC requirements of IEC/EN 61326.

The measuring system described in this Operating Instruction thus complies with the statutory requirements of the EC Directives. Endress+Hauser confirms successful testing of the device by affixing to it the CE mark.

The measuring system is in conformity with the EMC requirements of the "Australian Communications and Media Authority (ACMA)".

2.3 Registered trademarks

TRI-CLAMP ®
is a registered trademark of Ladish & Co., Inc., Kenosha, USA

SWAGELOK ®
is a registered trademark of Swagelok & Co., Solon, USA

HART ®
is a registered trademark of HART Communication Foundation, Austin, USA

HistoROM™, S-DAT®, FieldCare®, Fieldcheck®, Field Xpert™, Applicator®
are registered trademarks of Endress+Hauser Flowtec AG, Reinach, CH

3 Installation

3.1 Incoming acceptance, transport and storage

3.1.1 Incoming acceptance

On receipt of the goods, check the following points:
- Check the packaging and the contents for damage.
- Check the shipment, make sure nothing is missing and that the scope of supply matches your order.

3.1.2 Transport

The following instructions apply to unpacking and to transporting the device to its final location:

- Transport the devices in the containers in which they are delivered.
- The covers or caps fitted to the process connections prevent mechanical damage to the sealing faces and the ingress of foreign matter to the measuring tube during transportation and storage. Consequently, do not remove these covers or caps until immediately before installation.
- Do not lift measuring devices of nominal diameters ≥ DN 40 (≥ DN 1½") by the transmitter housing or the connection housing in the case of the remote version (Fig. 4). Use webbing slings slung round the two process connections (Fig. 4). Do not use chains, as they could damage the housing.

⚠ Warning!
Risk of injury if the measuring device slips. The center of gravity of the assembled measuring device might be higher than the points around which the slings are slung. At all times, therefore, make sure that the device does not unexpectedly turn around its axis or slip.

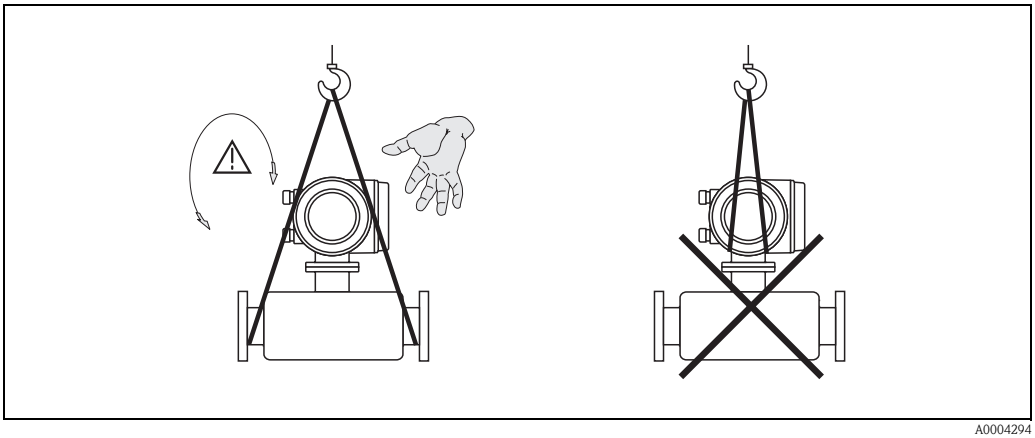

Fig. 4: Instructions for transporting sensors with diameters ≥ DN 40 (≥ DN 1½")

3.1.3 Storage

Note the following points:
- Pack the measuring device in such a way as to protect it reliably against impact for storage (and transportation). The original packaging provides optimum protection.
- The permissible storage temperature is –40 to +80 °C (–40 to +176 °F), preferably +20 °C (68 °F).
- Do not remove the protective covers or caps on the process connections until you are ready to install the device.
- The measuring device must be protected against direct sunlight during storage in order to avoid unacceptably high surface temperatures.

3.2 Installation conditions

Note the following points:

- No special measures such as supports are necessary. External forces are absorbed by the construction of the instrument.
- The high oscillation frequency of the measuring tubes ensures that the correct operation of the measuring system is not influenced by pipe vibrations.
- No special precautions need to be taken for fittings which create turbulence (valves, elbows, T-pieces, etc.), as long as no cavitation occurs.

3.2.1 Dimensions

Dimensions and fitting lengths of the transmitter and the sensor are provided in the separate documentation "Technical Information" (→ Page 66).

3.2.2 Mounting location

Entrained air or gas bubbles in the measuring tube can result in an increase in measuring errors. Avoid the following locations:

- Highest point in a run. Risk of air accumulating.
- Directly upstream from an open pipe outlet in a vertical pipeline.

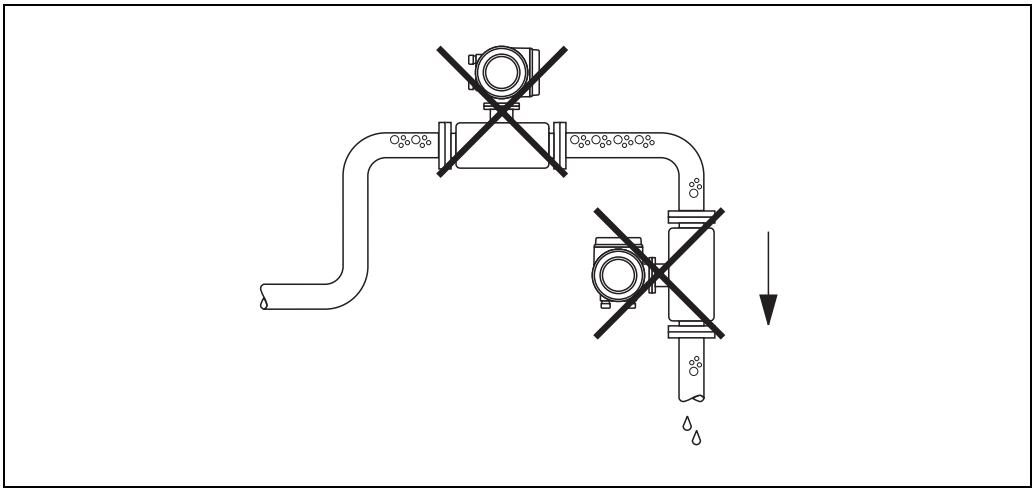

A0003605

Fig. 5: Mounting location

Installation in a down pipe

The proposed configuration in the following diagram, however, permits installation in an open down pipe. Pipe restrictors or the use of an orifice with a smaller cross-section than the nominal diameter prevent the sensor from running empty while measurement is in progress.

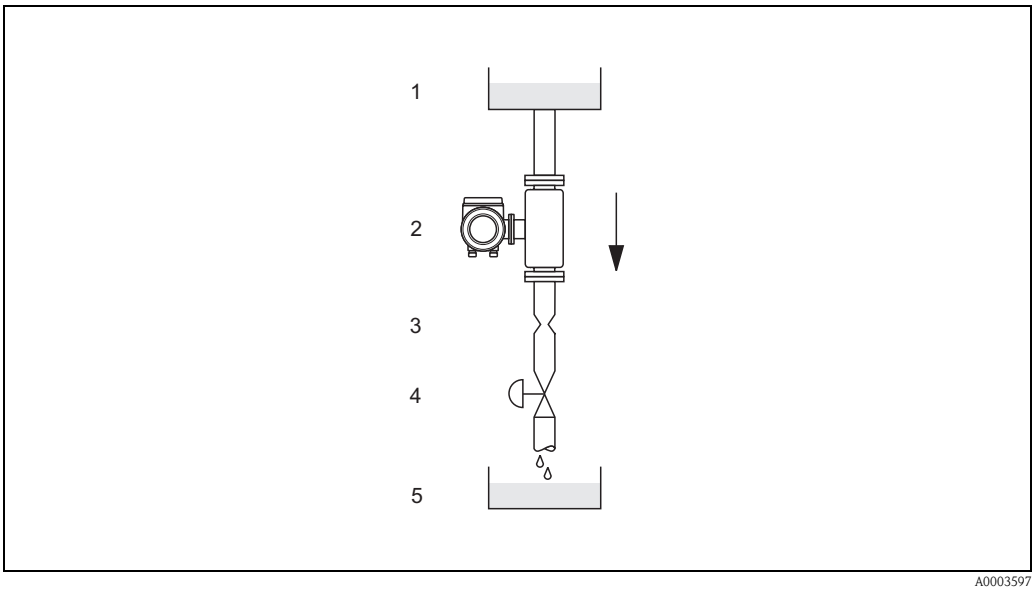

Fig. 6: Installation in a down pipe (e.g. for batching applications)

1 Supply tank
2 Sensor
3 Choke, restrictor
4 Valve
5 Batching tank

DN		∅ Orifice plate, pipe restriction	
[mm]	[inch]	[mm]	[inch]
8	3/8"	6	0.25
15	½"	10	0.40
25	1"	14	0.55
40	1½"	22	0.87
50	2"	28	1.10
80	3"	50	2.00

System pressure

It is important to ensure that cavitation does not occur, because it would influence the oscillation of the measuring tube. No special measures need to be taken for fluids which have properties similar to water under normal conditions.
In the case of liquids with a low boiling point (hydrocarbons, solvents, liquefied gases) or in suction lines, it is important to ensure that pressure does not drop below the vapor pressure and that the liquid does not start to boil. It is also important to ensure that the gases that occur naturally in many liquids do not outgas. Such effects can be prevented when system pressure is sufficiently high.

Consequently, it is generally best to install the sensor:
- downstream from pumps (no risk of partial vacuum)
- at the lowest point in a vertical pipe

3.2.3 Orientation

Make sure that the direction of the arrow on the nameplate of the sensor matches the direction of flow (direction of fluid flow through the pipe).

Vertical (Fig. V)
Recommended orientation with upward direction of flow. When fluid is not flowing, entrained solids will sink down and gases will rise away from the measuring tube. Thus the measuring tubes can be completely drained and protected against solids buildup.

Horizontal (Fig. H1, H2)
The measuring tubes must be horizontal and beside each other. When installation is correct the transmitter housing is above or below the pipe (Fig. H1/H2). Always avoid having the transmitter housing in the same horizontal plane as the pipe. Please note the special installation instructions!

Orientation	Vertical	Horizontal, Transmitter head up	Horizontal, Transmitter head down
	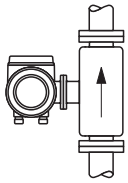 A0004572 Fig. V	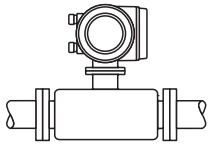 a0004576 Fig. H1	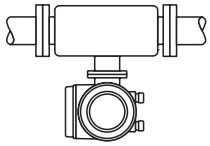 a0004580 Fig. H2
Standard, Compact version	✔✔	✔✔	✔✔

✔✔ = Recommended orientation; ✔ = Orientation recommended in certain situations; ✘ = Impermissible orientation

In order to ensure that the permissible ambient temperature range for the transmitter (→ Page 62) is not exceeded, we recommend the following orientations:
- For fluids with very high temperatures we recommend the horizontal orientation with the transmitter head pointing downwards (Fig. H2) or the vertical orientation (Fig. V).
- For fluids with very low temperatures, we recommend the horizontal orientation with the transmitter head pointing upwards (Fig. H1) or the vertical orientation (Fig. V).

Special installation instructions

Caution!
When using a bent measuring tube and horizontal installation, the position of the sensor has to be matched to the fluid properties.

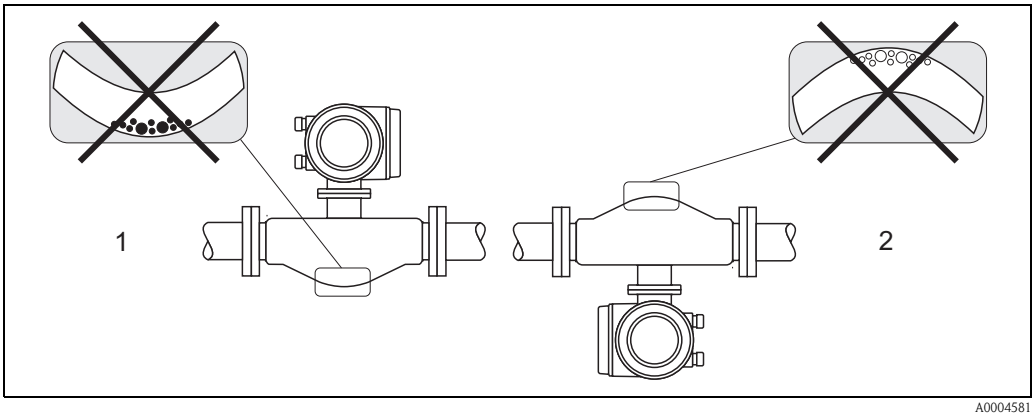

A0004581

Fig. 7: Horizontal installation

1 Not suitable for fluids with entrained solids. Risk of solids accumulating!
2 Not suitable for outgassing fluids. Risk of air accumulating!

3.2.4 Heating, thermal insulation

Some fluids require suitable measures to avoid heat transfer at the sensor. A wide range of materials can be used to provide the required thermal insulation. Heating can be electric, e.g. with heated elements, or by means of hot water or steam pipes made of copper.

Note!
- Do not use any heating elements with thyristor controlled voltage sources.
- When using electrical heat tracing whose heat is regulated using phase control or by pulse packs, it cannot be ruled out that the measured values are influenced by magnetic fields which may occur, i.e. at values greater than those permitted by the EC standard (Sinus 30 A/m). In such cases, the sensor must be magnetically screened.
  The secondary containment can be shielded with tin plates or electric sheets without privileged direction (e.g. V330-35A) with the following properties:
  – Relative magnetic permeability $\mu_r \geq 300$
  – Plate thickness d ≥ 0.35 mm (d ≥ 0,014")

Caution!
Risk of electronics overheating!
- Make sure that the connector between sensor and transmitter always remains free of insulating material.
- Bear in mind that a certain orientation might be required, depending on the temperature of the fluid → Page 12
- Information on permissible temperature ranges → Page 62

3.2.5 Inlet and outlet runs

There are no installation requirements regarding inlet and outlet runs. If possible, install the sensor well clear of fittings such as valves, T-pieces, elbows, etc.

3.2.6 Vibrations

The high oscillation frequency of the measuring tubes ensures that the correct operation of the measuring system is not influenced by pipe vibrations. Consequently, the sensors require no special measures for attachment.

3.2.7 Limiting flow

See the information on Page 56 and 62.

3.3 Installation instructions

3.3.1 Turning the transmitter housing

Warning!
The turning mechanism in devices with EEx d/de or FM/CSA Cl. I Div. 1 classification is not the same as that described here. The procedure for turning these housings is described in the Ex-specific documentation.

1. Loosen the two securing screws.
2. Turn the bayonet catch as far as it will go.
3. Carefully lift the transmitter housing as far as it will go.
4. Turn the transmitter housing to the desired position (max. 2 x 90° in either direction).
5. Lower the housing into position and re-engage the bayonet catch.
6. Retighten the two securing screws.

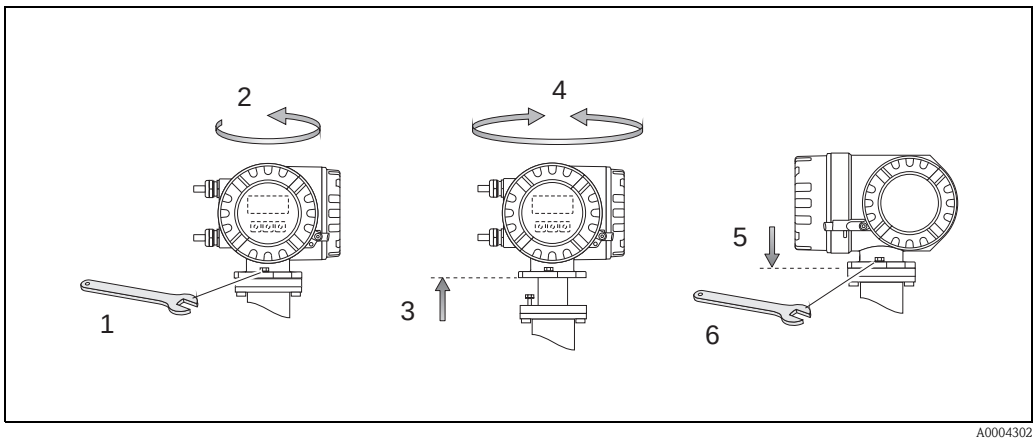

A0004302

Fig. 8: Turning the transmitter housing (aluminum field housing)

3.3.2 Turning the local display

1. Remove the cover of the electronics compartment.
2. Press the side latches on the display module and remove it from the electronics compartment cover.
3. Rotate the display to the desired position (max. 4x45° in each direction), and reset it into the electronics compartment cover.
4. Screw the cover of the electronics compartment firmly onto the transmitter housing.

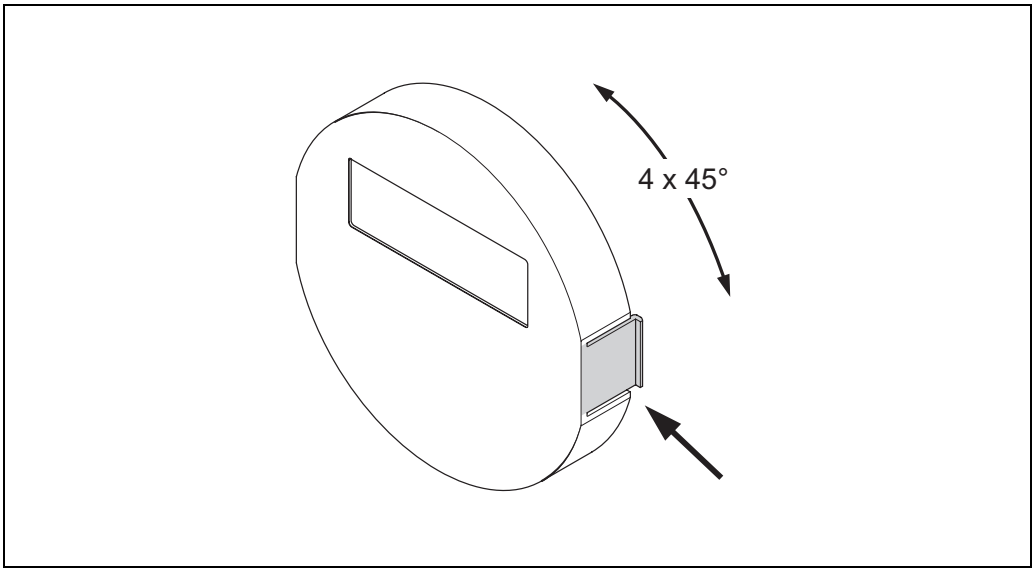

A0003236

Fig. 9: Turning the local display (field housing)

3.4 Post installation check

Perform the following checks after installing the measuring device in the pipe:

Device condition and specifications	Notes
Is the device damaged (visual inspection)?	–
Does the device correspond to specifications at the measuring point, including process temperature and pressure, ambient temperature, measuring range, etc.?	see Page 56 ff.
Installation	Notes
Does the arrow on the sensor nameplate match the direction of flow through the pipe?	–
Are the measuring point number and labeling correct (visual inspection)?	–
Is the orientation chosen for the sensor correct, in other words suitable for sensor type, fluid properties (outgassing, with entrained solids) and fluid temperature?	see Page 12 ff.
Process environment and process conditions	Notes
Is the measuring device protected against moisture and direct sunlight?	–

4 Wiring

Warning!
When connecting Ex-certified devices, see the notes and diagrams in the Ex-specific supplement to this Operating Instruction. Please do not hesitate to contact your Endress+Hauser representative if you have any questions.

Note!
The device does not have an internal power switch. For this reason, assign the device a switch or power-circuit breaker which can be used to disconnect the power supply line from the power grid.

4.1 Connecting the measuring unit

4.1.1 Connecting the transmitter

Warning!
- Risk of electric shock. Switch off the power supply before opening the device. Do not install or wire the device while it is connected to the power supply. Failure to comply with this precaution can result in irreparable damage to the electronics.
- Risk of electric shock. Connect the protective conductor to the ground terminal on the housing before the power supply is applied (not necessary if the power supply is galvanically isolated).
- Compare the specifications on the nameplate with the local voltage supply and frequency. The national regulations governing the installation of electrical equipment also apply.

1. Remove the cover of the connection compartment (f) from the transmitter housing.
2. Feed the power supply cable (a) and signal cables (b) through the appropriate cable entries.
3. Connect the cables:
   – Wiring diagramm → Fig. 10
   – Terminal assignment → Page 20
4. Screw the cover of the connection compartment (f) firmly onto the transmitter housing.

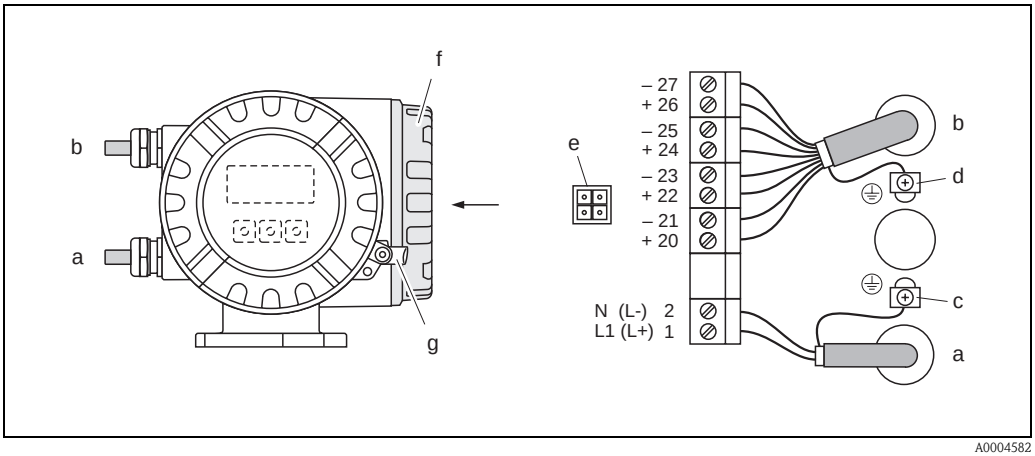

Fig. 10: Connecting the transmitter (aluminium field housing); Cable cross-section: max. 2.5 mm²

a Cable for power supply: 85…260 V AC, 20…55 V AC, 16…62 V DC
Terminal No. 1: L1 for AC, L+ for DC
Terminal No. 2: N for AC, L– for DC
b Signal cable: Terminals Nos. 20–27 → Page 19
c Ground terminal for protective conductor
d Ground terminal for signal cable shield
e Service adapter for connecting service interface FXA 193 (Fieldcheck, FieldCare)
f Cover of the connection compartment
g Securing clamp

4.1.2 Terminal assignment

- Electrical values for inputs → Page 56
- Electrical values for outputs → Page 58

Order variant	Terminal Nos. (inputs/outputs)			
	20 (+) / 21 (–)	**22 (+) / 23 (–)**	**24 (+) / 25 (–)**	**26 (+) / 27 (–)**
40***-**********A	–	–	Frequency output	Current output HART
40***-**********D	Status input	Status output	Frequency output	Current output HART
40***-**********S	–	–	Frequency output Ex i	Current output, Ex i, active, HART
40***-**********T	–	–	Frequency output Ex i	Current output, Ex i, passive, HART

4.1.3 HART connection

Users have the following connection options at their disposal:
- Direct connection to transmitter by means of terminals 26(+) / 27(–)
- Connection by means of the 4…20 mA circuit.

Note!
- The measuring loop's minimum load must be at least 250 Ω.
- The CURRENT SPAN function must be set to "4–20 mA" (individual options see device function).
- See also the documentation issued by the HART Communication Foundation, and in particular HCF LIT 20: "HART, a technical summary".

Connection of the HART handheld communicator
See also the documentation issued by the HART Communication Foundation, and in particular HCF LIT 20: "HART, a technical summary".

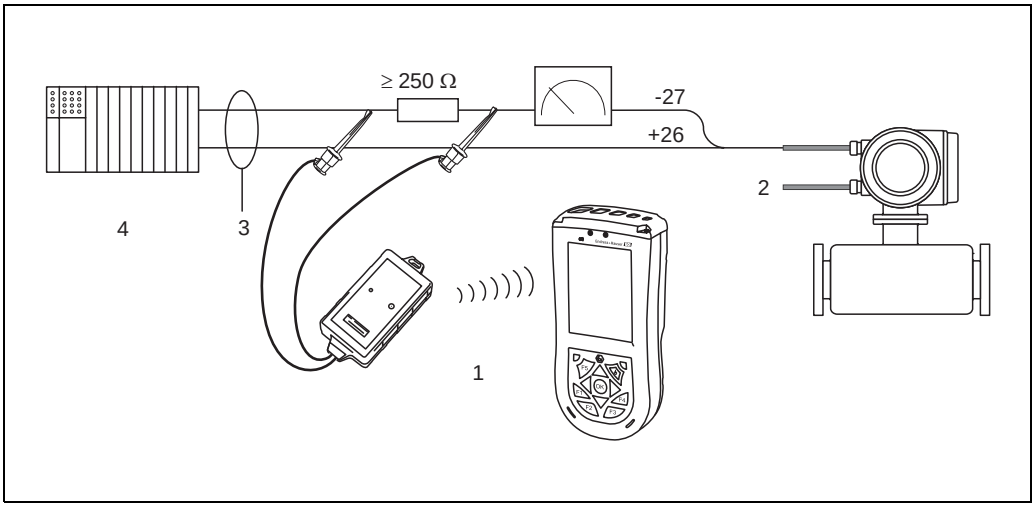

Fig. 11: Electrical connection of HART handheld terminal
1 = HART handheld terminal
2 = Auxiliary energy
3 = Shielding
4 = Other evaluation devices or PLC with passive input

Connecting a PC with operating software
In order to connect a personal computer with a operating software (e.g. FieldCare) a HART modem (e.g. Commubox FXA 195) is needed.

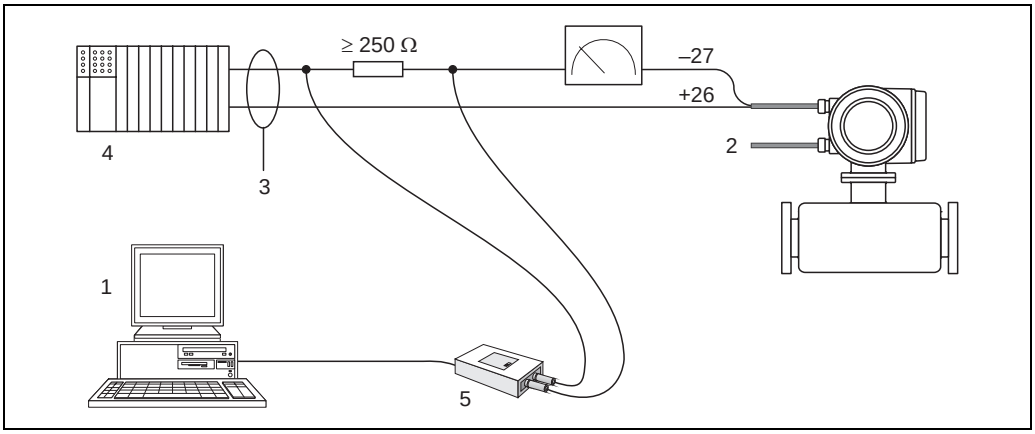

Fig. 12: Electrical connection of a PC with operating software
1 = PC with operating software
2 = Auxiliary energy
3 = Shielding
4 = Other switching units or PLC with passive input
5 = HART modem, e.g. Commubox FXA 195

4.2 Degree of protection

The measuring device fulfill all the requirements for IP 67.

Compliance with the following points is mandatory following installation in the field or servicing, in order to ensure that IP 67 protection is maintained:
- The housing seals must be clean and undamaged when inserted into their grooves. The seals must be dried, cleaned or replaced if necessary.
- The threaded fasteners and screw covers must be firmly tightened.
- The cables used for connection must be of the specified outside diameter → Page 58, cable entries.
- The cable entries must be firmly tighten (point **a** → Fig. 13).
- The cable must loop down in front of the cable entry ("water trap") (point **b** → Fig. 13). This arrangement prevents moisture penetrating the entry.

Note!
The cable entries may not be point up.

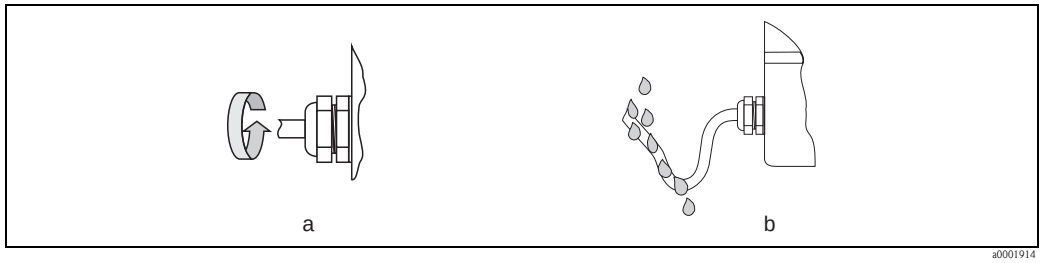

Fig. 13: Installation instructions, cable entries

- Remove all unused cable entries and insert plugs instead.
- Do not remove the grommet from the cable entry.

Caution!
Do not loosen the screws of the sensor housing, as otherwise the degree of protection guaranteed by Endress+Hauser no longer applies.

4.3 Post connection check

Perform the following checks after completing electrical installation of the measuring device:

Device condition and specifications	Notes
Are cables or the device damaged (visual inspection)?	–
Electrical connection	Notes
Does the supply voltage match the specifications on the nameplate?	85…260 V AC (45…65 Hz) 20…55 V AC (45…65 Hz) 16…62 V DC
Do the cables have adequate strain relief?	–
Cables correctly segregated by type? Without loops and crossovers?	–
Are the power supply and signal cables correctly connected?	See the wiring diagram inside the cover of the terminal compartment
Are all screw terminals firmly tightened?	–
Are all cable entries installed, firmly tightened and correctly sealed? Cables looped as "water traps"?	see Page 21
Are all housing covers installed and firmly tightened?	–

5 Operation

5.1 Display element

The local display enables you to read all important parameters directly at the measuring point. The backlit, two-line liquid crystal display shows measured values, dialog texts, fault messages and notice messages. The display as it appears when normal measuring is in progress is known as the HOME position (operating mode).

- Upper display line: shows the primary measured value, mass flow or volume flow.
- Lower display line: shows additional measured variables and status variables, e.g. totalizer reading, bar graph, measuring point designation.

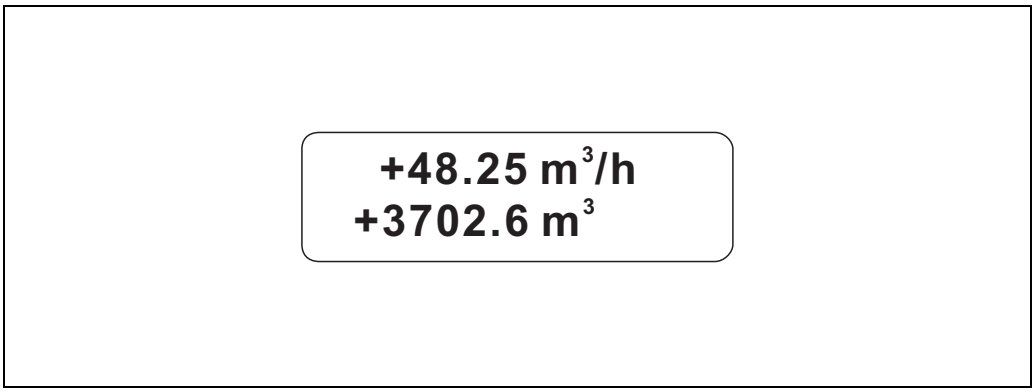

Fig. 14: Display

You can change the assignment of display lines to different variables to suit your needs and preferences by means of the HART interface or using the "FieldCare" program (→ see "Description of Device Functions" manual).

5.1.1 Configuration of device parameters

The measuring device is parameterized via an operating program. The various operating possibilities are described in more detail on Page 27. Each of the operating programs comprises what is known as a function matrix, which contains a large number of configurable functions.

Note!
- The transmitter continues to measure while data entry is in progress, i.e. the current measured values are output via the signal outputs in the normal way.
- If the power supply fails all preset and parameterized values remain safely stored in the EEPROM.

Caution!
- All functions are described in detail, as is the function matrix itself, in the **"Description of Device Functions"** manual, which is a separate part of this Operating Instruction.
- Changing certain parameters such as all sensor characteristics, for example, influences numerous functions of the entire measuring system, particularly measuring accuracy.There is no need to change these parameters under normal circumstances and consequently, they are protected by a special code known only to the Endress+Hauser service organization. Please contact Endress+Hauser if you have any questions.

5.2 Display of error messages

Type of error
Errors that occur during commissioning or measuring are displayed immediately. If two or more system or process errors occur, the error with the highest priority is the one shown on the display. The measuring system distinguishes between two types of error:

- *System error:*
  this group includes all device errors, for example communication errors, hardware errors, etc.
  → see Page 44
- *Process error:*
  this group includes all application errors, for example "Fluid inhomogeneous", etc.
  → see Page 47

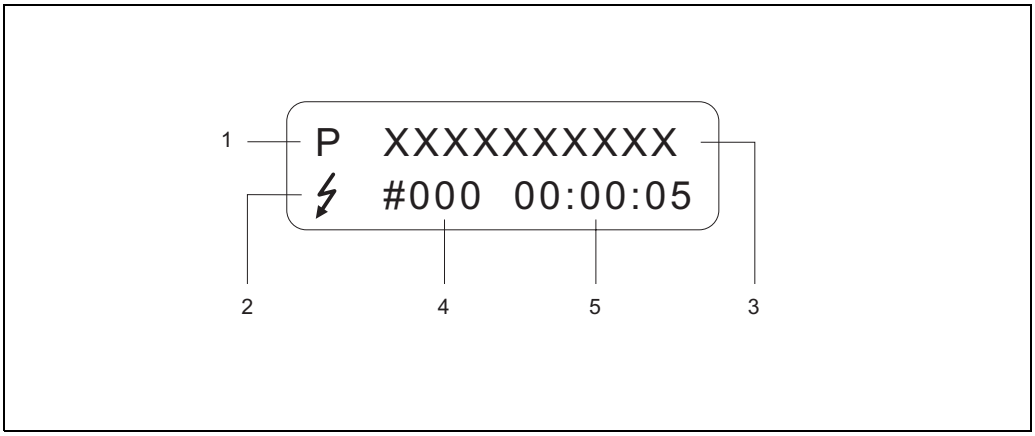

A0000991

Fig. 15: Error messages on the display (example)

1 Error type: P = process error, S = system error
2 Error message type: ϟ = fault message, ! = notice message (definition: see below)
3 Error designation: e.g. FLUID INHOM. = fluid is not homogeneous
4 Error number: e.g. # 702
5 Duration of most recent error occurrence (in hours, minutes and seconds)

Error message type
Users have the option of weighting system and process errors differently, by defining them as **"Fault messages"** or **"Notice messages"**. You can define messages in this way with the aid of the function matrix (see the "Description of Device Functions" manual).
Serious system errors, e.g. module defects, are always identified and classified as "fault messages" by the measuring device.

Notice message (!)
- Displayed as → Exclamation mark (!), error type (S: system error, P: process error).
- The error in question has no effect on the inputs or outputs of the measuring device.

Fault message (ϟ)
- Displayed as → Lightning flash (ϟ), error type (S: system error, P: process error).
- The error in question has a direct effect on the inputs or outputs.
  The response of the inputs or outputs (failsafe mode) can be defined by means of functions in the function matrix (see Page 49).

✎ Note!
- For security reasons, error messages should be output via the status output.
- When an error message is present, an upper or lower failure signal level can be output in accordance with NAMUR NE 43 via the current output.

5.3 Operating via the HART protocol

In addition to local operation, the measuring device can be configured and measured values can be obtained by means of the HART protocol. Digital communication takes place using the 4–20 mA current output HART (see Page 49).
The HART protocol allows the transfer of measuring and device data between the HART master and the field devices for configuration and diagnostics purposes. The HART master, e.g. a handheld terminal or PC-based operating programs (such as FieldCare), require device description (DD) files which are used to access all the information in a HART device. Information is exclusively transferred using so-called "commands". There are three different command groups:

Universal commands:
All HART device support and use universal commands.
The following functionalities are linked to them:
- Recognizing HART devices
- Reading digital measured values (mass flow, totalizer, etc.)

Common practice commands:
Common practice commands offer functions which are supported and can be executed by most but not all field devices.

Device-specific commands:
These commands allow access to device-specific functions which are not HART standard. Such commands access individual field device information, amongst other things, such as calibration values, creepage settings, etc.

✎ Note!
Promass 40 has access to all three command classes. On Page 27, you will find a list with all the supported "Universal Commands" and "Common Practice Commands".

5.3.1 Operating options

For the complete operation of the measuring device, including device-specific commands, there are DD files available to the user to provide the following operating aids and programs:

✎ Note!
The HART protocol requires the "4–20 mA setting in the CURRENT SPAN function (individual options see "Description of Device functions" Manual).

HART Communicator Field Xpert
Selecting device functions with a HART Communicator is a process involving a number of menu levels and a special HART function matrix. The HART manual in the carrying case of the HART Communicator contains more detailed information on the device.

Operating program "FieldCare"
FieldCare is Endress+Hauser's FDT-based plant asset management tool and allows the configuration and diagnosis of intelligent field devices. By using status information, you also have a simple but effective tool for monitoring devices. The Proline flowmeters are accessed via a HART interface FXA195 or via the service interface FXA193.

Operating program "SIMATIC PDM" (Siemens)
SIMATIC PDM is a standardized, manufacturer-independent tool for the operation, configuration, maintenance and diagnosis of intelligent field devices.

Operating program "AMS" (Emerson Process Management)
AMS (Asset Management Solutions): program for operating and configuring devices

5.3.2 Current device description files

The following table illustrates the suitable device description file for the operating tool in question and then indicates where these can be obtained.

HART protocol:

Valid for software:	3.01.00	→ Function DEVICE SOFTWARE
Device data HART Manufacturer ID: Device ID:	 11_{hex} (ENDRESS+HAUSER) 50_{hex}	 → Function MANUFACTURER ID → Function DEVICE ID
HART version data:	Device Revision 9 / DD Revision 1	
Software release:	01.2010	

Operating program:	**Sources for obtaining device descriptions:**
Field Xpert handheld terminal	■ Use update function of handheld terminal
FieldCare / DTM	■ www.endress.com → Download-Area ■ CD–ROM (Endress+Hauser order number 56004088) ■ DVD (Endress+Hauser order number 70100690)
AMS	■ www.endress.com → Download-Area
SIMATIC PDM	■ www.endress.com → Download-Area

Tester/simulator:	**Sources for obtaining device descriptions:**
Fieldcheck	■ Update by means of FieldCare via flow device FXA 193/291 DTM in Fieldflash Module

5.3.3 Device and process variables

Device variables:
The following device variables are available using the HART protocol:

Code (decimal)	Device variable
0	OFF (unassigned)
2	Mass flow
5	Volume flow
6	Corrected volume flow
250	Totalizer 1

Process variables:
At the factory, the process variables are assigned to the following device variables:
- Primary process variable (PV) → Mass flow
- Second process variable (SV) → Totalizer 1
- Third process variable (TV) → Volume flow
- Fourth process variable (FV) → Corrected volume flow

✎ Note!
You can set or change the assignment of device variables to process variables using Command 51 → Page 31

5.3.4 Universal/Common practice HART commands

The following table contains all the universal commands supported by the device.

Command No. **HART command / Access type**		**Command data** (numeric data in decimal form)	**Response data** (numeric data in decimal form)
Universal Commands			
0	Read unique device identifier Access type = read	none	Device identification delivers information on the device and the manufacturer. It cannot be changed. The response consists of a 12-byte-device ID: – Byte 0: fixed value 254 – Byte 1: Manufacturer ID, 17 = Endress+Hauser – Byte 2: Device type ID, e.g. 83 = Promass 40 – Byte 3: Number of preambles – Byte 4: Universal commands rev. no. – Byte 5: Device-specific commands rev. no. – Byte 6: Software revision – Byte 7: Hardware revision – Byte 8: Additional device information – Byte 9-11: Device identification
1	Read primary process variable Access type = read	none	– Byte 0: HART unit code of the primary process variable – Bytes 1-4: Primary process variable *Factory setting:* Primary process variable = Mass flow ✎ Note! ■ You can set the assignment of device variables to process variables using Command 51. ■ Manufacturer specific units are represented using the HART unit code "240".
2	Read the primary process variable as current in mA and percentage of the set measuring range Access type = read	none	– Bytes 0-3: Actual current of the primary process variable in mA – Bytes 4-7: Percentage of the set measuring range *Factory setting:* Primary process variable = Mass flow ✎ Note! You can set the assignment of device variables to process variables using Command 51.
3	Read the primary process variable as current in mA and four (preset using Command 51) dynamic process variables Access type = read	none	24 bytes are sent as a response: – Bytes 0-3: Primary process variable current in mA – Byte 4: HART unit code of the primary process variable – Bytes 5-8: Primary process variable – Byte 9: HART unit code of the second process variable – Bytes 10-13: Second process variable – Byte 14: HART unit code of the third process variable – Bytes 15-18: Third process variable – Byte 19: HART unit code of the fourth process variable – Bytes 20-23: Fourth process variable *Factory setting:* ■ Primary process variable = Mass flow ■ Second process variable = Totalizer 1 ■ Third process variable = Volume flow ■ Fourth process variable = Corrected volume flow ✎ Note! ■ You can set the assignment of device variables to process variables using Command 51. ■ Manufacturer specific units are represented using the HART unit code "240".

Command No. HART command / Access type		Command data (numeric data in decimal form)	Response data (numeric data in decimal form)
Universal Commands			
6	Set HART short form address Access type = write	Byte 0: desired address (0…15) Factory setting: 0 ✎ Note! With an address >0 (multidrop mode), the current output of the primary process variable is set to 4 mA.	Byte 0: active address
11	Read unique device identification using the TAG (measuring point designation) Access type = read	Bytes 0-5: TAG	Device identification delivers information on the device and the manufacturer. It cannot be changed. The response consists of a 12-byte-device ID if the given TAG agrees with the one saved in the device: – Byte 0: fixed value 254 – Byte 1: Manufacturer ID, 17 = Endress+Hauser – Byte 2: Device type ID, 83 = Promass 40 – Byte 3: Number of preambles – Byte 4: Universal commands rev. no. – Byte 5: Device-specific commands rev. no. – Byte 6: Software revision – Byte 7: Hardware revision – Byte 8: Additional device information – Byte 9-11: Device identification
12	Read user message Access type = read	none	Bytes 0-24: User message ✎ Note! You can write the user message using Command 17.
13	Read TAG, descriptor and date Access type = read	none	– Bytes 0-5: TAG – Bytes 6-17: Descriptor – Byte 18-20: Date ✎ Note! You can write the TAG, descriptor and date using Command 18.
14	Read sensor information on primary process variable	none	– Bytes 0-2: Sensor serial number – Byte 3: HART unit code of sensor limits and measuring range of the primary process variable – Bytes 4-7: Upper sensor limit – Bytes 8-11: Lower sensor limit – Bytes 12-15: Minimum span ✎ Note! ■ The data relate to the primary process variable (= Mass flow). ■ Manufacturer specific units are represented using the HART unit code "240".

Command No. **HART command / Access type**		**Command data** (numeric data in decimal form)	**Response data** (numeric data in decimal form)
Universal Commands			
15	Read output information of primary process variable Access type = read	none	– Byte 0: Alarm selection ID – Byte 1: Transfer function ID – Byte 2: HART unit code for the set measuring range of the primary process variable – Bytes 3-6: Upper range, value for 20 mA – Bytes 7-10: Start of measuring range, value for 4 mA – Byte 11-14: Attenuation constant in [s] – Byte 15: Write protection ID – Byte 16: OEM dealer ID, 17 = Endress+Hauser *Factory setting:* Primary process variable = Mass flow ✎ Note! ■ You can set the assignment of device variables to process variables using Command 51. ■ Manufacturer specific units are represented using the HART unit code "240".
16	Read the device production number Access type = read	none	Bytes 0-2: Production number
17	Write user message Access = write	You can save any 32-character long text in the device under this parameter: Bytes 0-23: Desired user message	Displays the current user message in the device: Bytes 0-23: Current user message in the device
18	Write TAG, descriptor and date Access = write	With this parameter, you can store an 8 character TAG, a 16 character descriptor and a date: – Bytes 0-5: TAG – Bytes 6-17: Descriptor – Byte 18-20: Date	Displays the current information in the device: – Bytes 0-5: TAG – Bytes 6-17: Descriptor – Byte 18-20: Date

The following table contains all the common practice commands supported by the device.

Command No. **HART command / Access type**		**Command data** (numeric data in decimal form)	**Response data** (numeric data in decimal form)
Common Practice Commands			
34	Write damping value for primary process variable Access = write	Bytes 0-3: Damping value of the primary process variable in seconds *Factory setting:* Primary process variable = Mass flow	Displays the current damping value in the device: Bytes 0-3: Damping value in seconds
35	Write measuring range of primary process variable Access = write	Write the desired measuring range: – Byte 0: HART unit code of the primary process variable – Bytes 1-4: Upper range, value for 20 mA – Bytes 5-8: Start of measuring range, value for 4 mA *Factory setting:* Primary process variable = Mass flow ✎ Note! ▪ You can set the assignment of device variables to process variables using Command 51. ▪ If the HART unit code is not the correct one for the process variable, the device will continue with the last valid unit.	The currently set measuring range is displayed as a response: – Byte 0: HART unit code for the set measuring range of the primary process variable – Bytes 1-4: Upper range, value for 20 mA – Bytes 5-8: Start of measuring range, value for 4 mA ✎ Note! Manufacturer-specific units are represented using the HART unit code "240".
38	Device status reset (Configuration changed) Access = write	none	none
40	Simulate output current of primary process variable Access = write	Simulation of the desired output current of the primary process variable. An entry value of 0 exits the simulation mode: Byte 0-3: Output current in mA *Factory setting:* Primary process variable = Mass flow ✎ Note! You can set the assignment of device variables to process variables with Command 51.	The momentary output current of the primary process variable is displayed as a response: Byte 0-3: Output current in mA
42	Perform master reset Access = write	none	none

Command No. **HART command / Access type**		**Command data** (numeric data in decimal form)	**Response data** (numeric data in decimal form)
Common Practice Commands			
44	Write unit of primary process variable Access = write	Set unit of primary process variable. Only unit which are suitable for the process variable are transferred to the device: Byte 0: HART unit code *Factory setting:* Primary process variable = Mass flow ✎ Note! ■ If the written HART unit code is not the correct one for the process variable, the device will continue with the last valid unit. ■ If you change the unit of the primary process variable, this has no impact on the system units.	The current unit code of the primary process variable is displayed as a response: Byte 0: HART unit code ✎ Note! Manufacturer-specific units are represented using the HART unit code "240".
48	Read additional device status Access = read	none	The device status is displayed in extended form as the response: Coding: see table on Page 33
50	Read assignment of the device variables to the four process variables Access = read	none	Display of the current variable assignment of the process variables: – Byte 0: Device variable code to the primary process variable – Byte 1: Device variable code to the second process variable – Byte 2: Device variable code to the third process variable – Byte 3: Device variable code to the fourth process variable *Factory setting:* ■ Primary process variable: Code 1 for mass flow ■ Second process variable: Code 250 for totalizer 1 ■ Third process variable: Code 5 for volume flow ■ Fourth process variable: Code 6 for corrected volume flow ✎ Note! You can set the assignment of device variables to process variables with Command 51.
51	Write assignments of the device variables to the four process variables Access = write	Setting of the device variables to the four process variables: – Byte 0: Device variable code to the primary process variable – Byte 1: Device variable code to the second process variable – Byte 2: Device variable code to the third process variable – Byte 3: Device variable code to the fourth process variable *Code of the supported device variables:* See data → Page 26 *Factory setting:* ■ Primary process variable = Mass flow ■ Second process variable = Totalizer 1 ■ Third process variable = Volume flow ■ Fourth process variable = Corrected volume flow ✎ Note! The totalizer cannot be assigned as the primary process variable.	The variable assignment of the process variables is displayed as a response: – Byte 0: Device variable code to the primary process variable – Byte 1: Device variable code to the second process variable – Byte 2: Device variable code to the third process variable – Byte 3: Device variable code to the fourth process variable

Command No. **HART command / Access type**		**Command data** (numeric data in decimal form)	**Response data** (numeric data in decimal form)
Common Practice Commands			
53	Write device variable unit Access = write	This command sets the unit of the given device variables. Only those units which suit the device variable are transferred: – Byte 0: Device variable code – Byte 1: HART unit code *Code of the supported device variables:* See data → Page 26 ✎ Note! ■ If the written unit is not the correct one for the device variable, the device will continue with the last valid unit. ■ If you change the unit of the device variable, this has no impact on the system units.	The current unit of the device variables is displayed in the device as a response: – Byte 0: Device variable code – Byte 1: HART unit code ✎ Note! Manufacturer-specific units are represented using the HART unit code "240".
59	Write number of preambles in response message Access = write	This parameter sets the number of preambles which are inserted in the response messages: Byte 0: Number of preambles (2…20)	As a response, the current number of the preambles is displayed in the response message: Byte 0: Number of preambles

5.3.5 Device status / Error messages

You can read the extended device status, in this case, current error messages, via Command "48". The command delivers information which are partly coded in bits (see table below).

✎ Note!
You can find a detailed explanation of the device status and error messages and their elimination in the "System error messages" section → Page 44 ff.

Byte	Bit	Error No.	Short error description (→ Page 44 ff.)
0	0	001	Serious device error
	1	011	Measuring amplifier has faulty EEPROM
	2	012	Error when accessing data of the measuring amplifier EEPROM
	3…7	not assigned	–
1	0	not assigned	–
	1	031	S-DAT: defective or missing
	2	032	S-DAT: Error accessing saved values
	3…4	not assigned	–
	5	051	I/O board and the amplifier board are not compatible.
	6…7	not assigned	–
2	0…7	not assigned	–
3	0…2	not assigned	–
	3	111	Totalizer checksum error
	4	121	I/O board and the amplifier board (software versions) are not compatible.
	5…7	not assigned	–
4	0…2	not assigned	–
	3	251	Internal communication fault on the amplifier board.
	4	261	No data reception between amplifier and I/O board
	5…7	not assigned	–
5	0…7	not assigned	–
6	0…7	not assigned	–
7	0…2	not assigned	–
	3	351	Current output: Flow is out of range.
	4…6	not assigned	–
	7	355	Frequency output: Flow is out of range.
8	0…2	not assigned	–
	3	359	Pulse output: Pulse output frequency is out of range.
	4…7	not assigned	–
9	0	379	The measuring tube oscillation frequency is outside the permitted range.
	1	380	
	2	381	The temperature sensor on the measuring tube is likely defective.
	3	382	
	4…5	not assigned	–
	6	385	One of the measuring tube sensor coils (inlet) is likely defective.
	7	386	One of the measuring tube sensor coils (outlet) is likely defective.

Byte	Bit	Error No.	Short error description (→ Page 44 ff.)
10	0	387	One of the measuring tube sensor coils (inlet or outlet) is likely defective.
	1	388	
	2	389	Amplifier error
	3	390	
	4…7	not assigned	–
11	0…7	not assigned	–
12	0…6	not assigned	–
	7	501	New amplifier software version is loaded. Currently no other commands are possible.
13	0	502	Upload and download of device files. Currently no other commands are possible.
	1…4	not assigned	–
	5	586	The fluid properties do not allow normal measuring operation.
	6	587	Extreme process conditions exist. The measuring system can therefore not be started.
	7	588	Overdriving of the internal analog to digital converter. A continuation of the measurement is no longer possible!
14	0…2	not assigned	–
	3	601	Positive zero return active
	4…6	not assigned	–
	7	611	Simulation current output active
15	0…2	not assigned	–
	3	621	Simulation frequency output active
	4…6	not assigned	–
	7	631	Simulation pulse output active
16	0…2	not assigned	–
	3	641	Simulation status output active
	4…7	not assigned	–
17	0…6	not assigned	–
	7	671	Simulation status input active
18	0…2	not assigned	–
	3	691	Simulation of response to error (outputs) active
	4	692	Simulation of measured variable active
	5…7	not assigned	–
19	0	700	The process fluid density is outside the upper or lower limit values
	1	701	The maximum current value for the measuring tube exciter coils has been reached, since certain process fluid characteristics are extreme.
	2	702	Frequency control is not stable, due to inhomogeneous fluid.
	3	703	Overdriving of the internal analog to digital converter. A continuation of the measurement is still possible!
	4	704	
	5	705	The electronics' measuring range will be exceeded. The mass flow is too high.
	6…7	not assigned	–
20	0…4	not assigned	–
	5	731	The zero point adjustment is not possible or has been cancelled.
	6…7	not assigned	–

6 Commissioning

6.1 Installation and function check

Make sure that the following function checks have been performed successfully before switching on the supply voltage for the measuring device:
- Checklist for "Post installation check" → Page 17
- Checklist for "Post connection check" → Page 22

6.2 Switching on the measuring device

Once the function checks have been successfully completed, it is time to switch on the power supply. The device is now operational.
The measuring device performs a number of power on self-tests. As this procedure progresses the following sequence of messages appears on the local display:

PROMASS 40 START-UP	Start-up message
▼	
DEVICE SOFTWARE XX.XX.XX	Current software version (example)
▼	
SYSTEM OK → OPERATION	Beginning of normal measuring mode

Normal measuring mode commences as soon as start-up completes.
Various measured value and/or status variables appear on the display (HOME position).

✎ Note!
If start-up fails, an error message indicating the cause is displayed.

6.3 Configuration

6.3.1 Current output: active/passive

The current output is configured as "active" or "passive" by means of various jumpers on the I/O board.

Warning!
Risk of electric shock!
Exposed components carry dangerous voltages. Make sure that the power supply is switched off before you remove the cover of the electronics compartment.

1. Switch off power supply.
2. Remove the I/O board → see Page 52 ff.
3. Set the jumpers in accordance with Fig. 16.

   Caution!
   Risk of destroying the measuring device. Set the jumpers exactly as shown in Fig. 16. Incorrectly set jumpers can cause overcurrents that would destroy either the measuring device or external devices connected to it.

4. Installation of the I/O board is the reverse of the removal procedure.

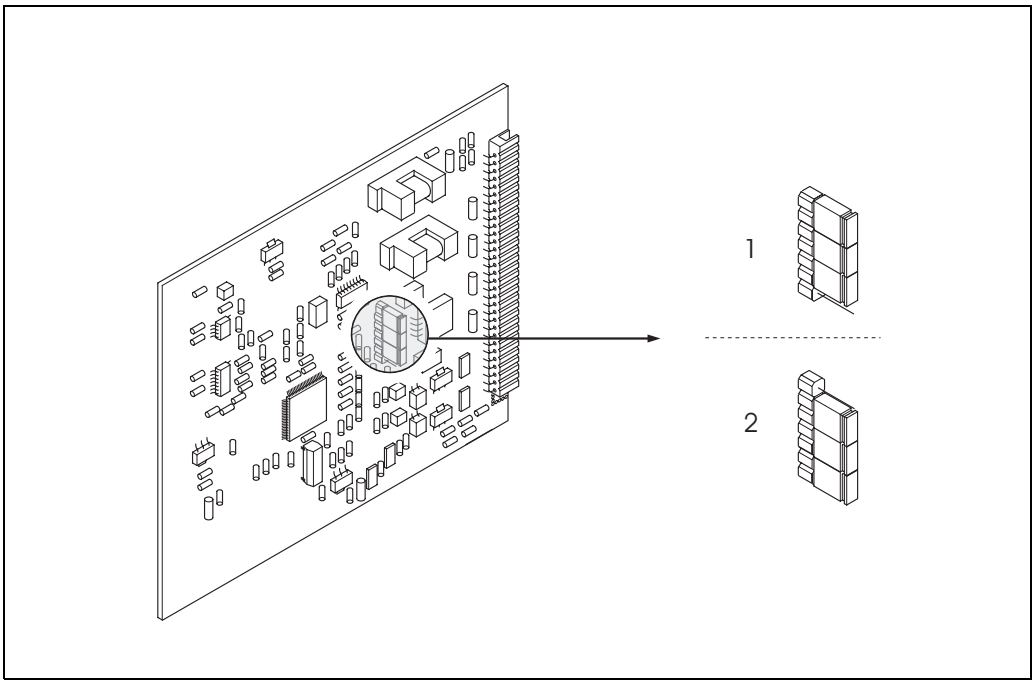

Fig. 16: Configuring the current output (I/O board)

1 Active current output (default)
2 Passive current output

6.4 Adjustment

6.4.1 Zero point adjustment

All measuring devices are calibrated with state-of-the-art technology.
The zero point obtained in this way is printed on the nameplate.
Calibration takes place under reference operating conditions → Page 59.
Consequently, zero point adjustment is generally **not** necessary.

Experience shows that the zero point adjustment is advisable only in special cases:
- to achieve higest measuring accuracy at very low flow rates
- under extreme process or operating conditions (e.g. very high process pressures or very high viscosity fluids).

Preconditions for a zero point adjustment
Note the following before you perform a zero point adjustment:
- A zero point adjustment can be performed only with fluids that contain no gas or solid contents.
- A zero point adjustment is performed with the measuring tubes completely filled and at zero flow (v = 0 m/s). This can be achieved, for example, with shut-off valves upstream and/or downstream of the sensor or by using existing valves and gates:
  – Normal operation → valves 1 and 2 open
  – Zero point adjustment *with* pump pressure → valve 1 open / valve 2 closed
  – Zero point adjustment *without* pump pressure → valve 1 closed / valve 2 open

Caution!
- If the fluid is very difficult to measure (e.g. containing entrained solids or gas) it may prove impossible to obtain a stable zero point despite repeated zero point adjustments. In instances of this nature, please contact your Endress+Hauser service center.
- You can view the currently valid zero point value using the "ZERO POINT" function (see the "Description of Device Functions" manual).

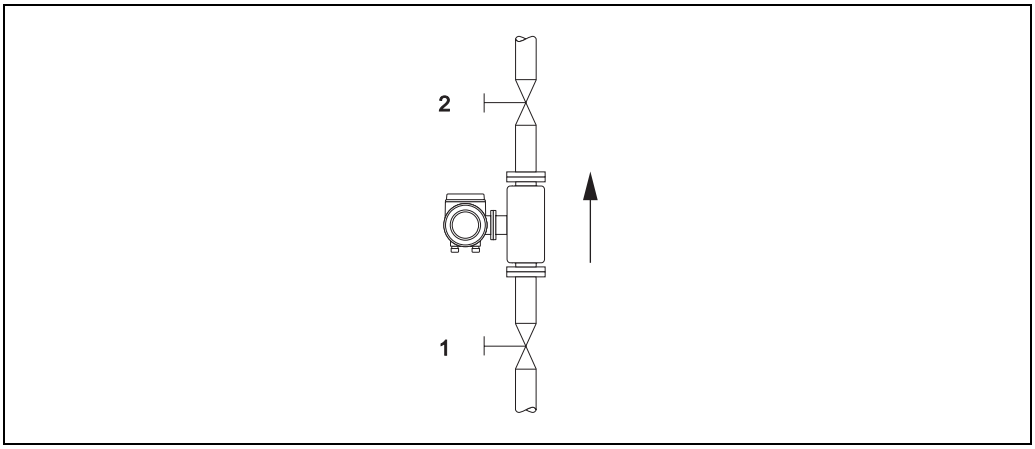

Fig. 17: Zero point adjustment and shut-off valves (1, 2)

Performing a zero point adjustment

1. Operate the system until operating conditions have settled.
2. Stop the flow (v = 0 m/s).
3. Check the shut-off valves for leaks.
4. Check that operating pressure is correct.
5. Via the function matrix, a zero point adjustment can be performed as follows:

Procedure
HOME position → Enter the function matrix
Select the "PROCESS PARAMETER" function group
Select the "ZERO ADJUST." function
Select "START" Zero adjustment now starts. While zero adjustment is in progress, the "Zero adjustment running" message is visible for 30…60 seconds. If the flow of fluid in the pipe exceeds 0.1 m/s, an error message appears on the display: "A: ZERO ADJUST NOT POSSIBLE"

6.4.2 Density adjustment

Accuracy in measuring fluid density (which is proportional to the resonance of the measuring tubes) has a direct effect on calculating volume flow. Density adjustment is not necessary unless the properties of the fluid are outside the reference operating conditions used at calibration.

Performing a density adjustment

Caution!
- On-site density adjustment can be performed only if the user has detailed knowledge of the fluid density, obtained for example from detailed laboratory analyses.
- The target density value specified in this way must not deviate from the fluid density measured in the device by more than ±10%.
- An error in defining the target density affects all calculated volume functions.
- Density adjustment changes the factory density calibration values or the calibration values set by the service technician.

The functions outlined in the instructions below are described in detail in the "Description of Device Functions" manual.

1. Fill the sensor with fluid. Make sure that the measuring tubes are completely filled and that liquids are free of gas bubbles.
2. Wait until the temperature difference between fluid and measuring tube has equalized. The time you have to wait for equalization depends on the fluid and the temperature level.
3. Select the density adjustment function within the function matrix:
   PROCESSPARAMETER → DENSITY SET VALUE
   Enter the fluid's target density and save this value. Input range = actual density value ±10%
4. Select the "MEASURE FLUID" function.
   Select the "START" setting. A "MEASURING DENSITY" message appears for approx. 10 seconds on the display. During this time the current density of the fluid (measured density value) is measured.
5. Select the "DENSITY ADJUST" function.
   Select the "DENSITY ADJUST" setting. Promass compares the measured density value with the target density value and calculates the new density coefficient.

   Caution!
   If density adjustment does not complete correctly, you can select the "RESTORE ORIGINAL" function to reactivate the default density coefficient.

6.5 Rupture disk

Sensor housings with integrated rupture disks are optionally available.

Warning!
- Make sure that the function and operation of the rupture disk is not impeded through the installation. Triggering overpressure in the housing as stated on the indication label. Take adequate precautions to ensure that no damage occurs, and risk to human life is ruled out, if the rupture disk is triggered. Rupture disk: Burst pressure 10 to 15 bar (145 to 217 psi).
- Please note that the housing can no longer assume a secondary containment function if a rupture disk is used.
- It is not permitted to open the connections or remove the rupture disk.

Caution!
- Rupture disks can not be combined with separately available heating jacket.
- The existing connection nozzles are not designed for a rinse or pressure monitoring function.

Note!
- Before commissioning, please remove the transport protection of the rupture disk.
- Please note the indication labels.

6.6 Data storage device (HistoROM)

At Endress+Hauser, the term HistoROM refers to various types of data storage modules on which process and measuring device data are stored. By unplugging and plugging such modules, device configurations can be duplicated onto other measuring devices to cite just one example.

6.6.1 HistoROM/S-DAT (Sensor-DAT)

The S-DAT is an exchangeable data storage device in which all sensor relevant parameters are stored, i.e., diameter, serial number, calibration factor, zero point.

7 Maintenance

No special maintenance work is required.

7.1 Exterior cleaning

When cleaning the exterior of measuring devices, always use cleaning agents that do not attack the surface of the housing and the seals.

8 Accessories

Various accessories, which can be ordered separately from Endress+Hauser, are available for the transmitter and the sensor. Detailed information on the order code in question can be obtained from the Endress+Hauser service organization.

8.1 Device-specific accessories

Accessory	Description	Ordering code
Transmitter Promass 40	Transmitter for replacement or for stock. Use the order code to define the following specifications: – Approvals – Degree of protection / version – Cable entries – Display / power supply / operation – Software – Outputs / inputs	40XXX – XXXXX * * * * * *

8.2 Measuring principle-specific accessories

Zubehör(teil)	Beschreibung	Bestell-Code
Memograph M graphic display recorder	The Memograph M graphic display recorder provides information on all the relevant process variables. Measured values are recorded correctly, limit values are monitored and measuring points analyzed. The data are stored in the 256 MB internal memory and also on a DSD card or USB stick. Memograph M boasts a modular design, intuitive operation and a comprehensive security concept. The ReadWin® 2000 PC software is part of the standard package and is used for configuring, visualizing and archiving the data captured. The mathematics channels which are optionally available enable continuous monitoring of specific power consumption, boiler efficiency and other parameters which are important for efficient energy management.	RSG40 - **********

8.3 Communication-specific accessories

Accessory	Description	Ordering code
HART Communicator Field Xpert handheld terminal	Handheld terminal for remote parameterization and for obtaining measured values via the current output HART (4 to 20 mA). Contact your Endress+Hauser representative for more information.	SFX100 - *******
FXA195	The Commubox FXA195 connects intrinsically safe smart transmitters with the HART protocol with the USB port of a personal computer. This enables remote operation of the transmitter with operating software (e.g. FieldCare). Power is supplied to the Commubox via the USB port.	FXA195 - *

8.4 Service-specific accessories

Accessory	Description	Ordering code
Applicator	Software for selecting and configuring flowmeters. Applicator can be downloaded from the Internet or ordered on CD-ROM for installation on a local PC. Contact your Endress+Hauser representative for more information.	DKA40 – *
Fieldcheck	Tester/simulator for testing flowmeters in the field. When used in conjunction with the "FieldCare" software package, test results can be imported into a database, printed and used for official certification. Contact your Endress+Hauser representative for more information.	DXC10 – * *
FieldCare	FieldCare is Endress+Hauser's FDT-based plant asset management tool and allows the configuration and diagnosis of intelligent field devices. By using status information, you also have a simple but effective tool for monitoring devices. The Proline flowmeters are accessed via a service interface or via the service interface FXA193.	Product page on the Endress+Hauser website: www.endress.com
FXA193	Service interface from the measuring device to the PC for operation via FieldCare.	FXA193 – *

9 Trouble-shooting

9.1 Trouble-shooting instructions

Always start trouble-shooting with the checklists below, if faults occur after start-up or during operation. The routine takes you directly to the cause of the problem and the appropriate remedial measures.

Check the display	
No display visible and no output signals present.	1. Check the power supply → terminals 1, 2 2. Check the power line fuse → Page 54 85…260 V AC: 0.8 A slow-blow / 250 V 20…55 V AC and 16…62 V DC: 2 A slow-blow / 250 V 3. Measuring electronics defective → order spare parts → Page 51
No display visible, but output signals are present.	1. Check whether the ribbon cable connector of the display module is correctly plugged into the amplifier board → Page 53 2. Display module defective → order spare parts → Page 51 3. Measuring electronics defective → order spare parts → Page 51
Measured value indicated, but no signal at the current or pulse output	Measuring electronics defective → order spare parts → Page 51

▼

Error messages on display
Errors which occur during commissioning or measuring operation are displayed immediately. Error messages consist of a variety of icons. The meanings of these icons are as follows: – Error type: **S** = system error, **P** = process error – Error message type: ϟ = fault message, **!** = notice message – **MEDIUM INHOM.** = error designation, e.g. fluid is not homogeneous – **03:00:05** = duration of error occurrence (in hours, minutes and seconds) – **# 702** = error number ☞ Caution! Also observe the information → Page 24 ff.

▼

Other error (without error message)	
Some other error has occurred.	Diagnosis and rectification → Page 48

9.2 System error messages

Serious system errors are **always** recognized by the instrument as "Fault message", and are shown as a lightning flash (ϟ) on the display! Fault messages immediately affect the inputs and outputs.

Caution!
In the event of a serious fault, a flowmeter might have to be returned to the manufacturer for repair. The procedures on Page 6 must be carried out before you return a flowmeter to Endress+Hauser. Always enclose a duly completed "Declaration of contamination" form. You will find a preprinted form at the back of this manual.

Note!
- The listed error message types below correspond to the factory setting.
- Also observe the informations on → Page 24 ff. and 49.

Type	Error message / No.	Cause	Remedy / spare part
S = System error ϟ = Fault message (with an effect on the outputs) ! = Notice message (without an effect on the outputs)			
Nr. # 0xx → Hardware error			
001	S: CRITICAL FAILURE ϟ: # 001	Serious device error	Replace the amplifier board. Spare parts → Page 51
012	S: AMP HW EEPROM ϟ: # 011	Amplifier: Defective EEPROM	Replace the amplifier board. Spare parts → Page 51
013	S: AMP SW EEPROM ϟ: # 012	Amplifier: Error accessing EEPROM data	The EEPROM data blocks in which an error has occurred are displayed in the "RESTORE DATA FAILURE" function. Press Enter to acknowledge the errors in question; default values are automatically inserted instead of the errored parameter values. Note! The measuring device has to be restarted if an error has occurred.
031	S: SENSOR HW DAT ϟ: # 031	Sensor: 1. S-DAT is not plugged into the amplifier board correctly (or is missing). 2. S-DAT is defective.	1. Check whether the S-DAT is correctly plugged into the amplifier board→ Page 53 2. Replace the S-DAT if it is defective. Spare parts→ Page 51 Before replacing the S-DAT, check that the new, replacement S-DAT is compatible with the measuring electronics. Check the: – Spare part set number – Hardware revision code 3. Replace measuring electronics boards if necessary. Spare parts→ Page 51 4. Plug the S-DAT into the amplifier board.
032	S: SENSOR SW DAT ϟ: # 032		
051	S: A / C COMPATIB. ϟ: # 051	The I/O board and the amplifier board are not compatible.	Use only compatible modules and boards. Check the compatibility of the modules used. Check the: – Spare part set number – Hardware revision code

Type	Error message / No.	Cause	Remedy / spare part
Nr. # 1xx → Software error			
111	S: CHECKSUM TOTAL ϟ: # 111	Totalizer checksum error	1. Restart the measuring device 2. Replace the amplifier board if necessary. Spare parts→ Page 51
121	S: A / C COMPATIB. !: # 121	Due to different software versions, I/O board and amplifier board are only partially compatible (possibly restricted functionality). ✎ Note! – This message is only listed in the error history. – Nothing is displayed on the display.	Module with lower software version has either to be actualized by FieldCare with the required software version or the module has to be replaced. Spare parts → Page 51
Nr. # 2xx → Error in DAT / no communication			
251	S: COMMUNICATION I/O ϟ: # 251	Internal communication fault on the amplifier board.	Remove the amplifier board. Spare parts → Page 51
261	S: COMMUNICATION I/O ϟ: # 261	No data reception between amplifier and I/O board or faulty internal data transfer.	Check the BUS contacts
Nr. # 3xx → System limits exceeded			
351	S: CURRENT RANGE !: # 351	Current output: Flow is out of range.	1. Change the upper or lower limit setting, as applicable. 2. Increase or reduce flow, as applicable.
355	S: FREQUENCY RANGE !: # 355	Frequency output: Flow is out of range.	1. Change the upper or lower limit setting, as applicable. 2. Increase or reduce flow, as applicable.
359	S: PULSE RANGE !: # 359	Pulse output: Pulse output frequency is out of range.	1. Increase the setting for pulse weighting 2. Increase the max. pulse frequency, if the totalizer can handle a higher number of pulses. 3. Reduce flow.
379 **380**	S: FREQ. LIM ϟ: # 379 / 380	The measuring tube oscillation frequency is outside the permitted range. Causes: – Damaged measuring tube – Sensor defective or damaged	Contact your Endress+Hauser service organization.
381 **382**	S: FLUIDTEMP. LIM ϟ: # 381 / 382	The temperature sensor on the measuring tube is likely defective.	Check the following electrical connections before you contact your Endress+Hauser service organization: – Verify that the sensor signal cable connector is correctly plugged into the amplifier board → Page 53.
385	S: INL.SENS.DEF. ϟ: # 385	One of the measuring tube exciter coils (inlet) is likely defective.	Check the following electrical connections before you contact your Endress+Hauser service organization: – Verify that the sensor signal cable connector is correctly plugged into the amplifier board → Page 53.
386	S: OUTL.SENS.DEF. ϟ: # 386	One of the measuring tube exciter coils (outlet) is likely defective.	Check the following electrical connections before you contact your Endress+Hauser service organization: – Verify that the sensor signal cable connector is correctly plugged into the amplifier board→ Page 53.

Type	Error message / No.	Cause	Remedy / spare part
387	S: SEN.ASY.EXCEED ϟ: # 387	Measuring pipe excitation coil is probably faulty.	Check the following electrical connections before you contact your Endress+Hauser service organization: – Verify that the sensor signal cable connector is correctly plugged into the amplifier board → Page 53.
388 **389** **390**	S: AMP. FAULT ϟ: # 388 / 389 / 390	Amplifier error	Contact your Endress+Hauser service organization.
Nr. # 5xx → Application error			
501	S: SW.-UPDATE ACT. !: # 501	New amplifier or communication (I/O module) software version is loaded. Currently no other functions are possible.	Wait until process is finished. The device will restart automatically.
502	S: UP-/DOWNLOAD ACT. !: # 502	Up- or downloading the device data via configuration program. Currently no other functions are possible.	Wait until process is finished.
Nr. # 6xx → Simulation mode active			
601	S: POS. ZERO-RET. !: # 601	Positive zero return active. ☞ Caution! This message has the highest display priority.	Switch off positive zero return
611	S: SIM. CURR. OUT. !: # 611	Simulation current output active	Switch off simulation
621	S: SIM. FREQ. OUT !: # 621	Simulation frequency output active	Switch off simulation
631	S: SIM. PULSE !: # 631	Simulation pulse output active	Switch off simulation
641	S: SIM. STAT. OUT. !: # 641	Simulation status output active	Switch off simulation
671	S: SIM. STAT. IN !: # 671	Simulation status input active	Switch off simulation
691	S: SIM. FAILSAFE ϟ: # 691	Simulation of response to error (outputs) active	Switch off simulation
692	S: SIM. MEASURAND !: # 692	Simulation of measuring variables (e.g. mass flow)	Switch off simulation

9.3 Process error messages

Process errors can be defined as either "Fault" or "Notice" messages and can thereby be weighted differently. Determination of this is done via the function matrix (see the "Description of Device Functions" Manual).

✎ Note!
- The error types listed in the following correspond to the factory settings.
- Also observe the information on → Page 24 ff. and 49

Type	Error message / No.	Cause	Remedy
P = Process error ϟ = Fault message (with an effect on the outputs) ! = Notice message (without an effect on the outputs)			
586	P: OSC. AMP. LIMIT ϟ: # 586	The fluid properties do not allow a continuation of the measurement. Causes: – Extremely high viscosity – Process fluid is very inhomogeneous (gas or solid content)	Change or improve process conditions.
587	P: TUBE NOT OSC ϟ: # 587	Extreme process conditions exist. The measuring system can therefore not be started.	Change or improve process conditions.
588	P: NOISE LIMIT ϟ: # 588	Overdriving of the internal analog to digital converter. Causes: – Cavitation – Extreme pressure pulses – High gas flow velocity A continuation of the measurement is no longer possible!	Change or improve process conditions, e.g. by reducing the flow velocity.
Nr. # 7xx → Other process errors			
700	P: EMPTY PIPE !: # 700	The process fluid density is below the lower limit value set in the "EPD" function. Causes: – Air in the measuring tube – Partly filled measuring tube	1. Ensure that there is no gas content in the process liquid. 2. Adapt the values in the "EPD RESPONSE TIME" function to the current process conditions.
701	P: EXC. CURR. LIM !: 701	The maximum current value for the measuring tube exciter coils has been reached, since certain process fluid characteristics are extreme, e.g. high gas or solid content. The instrument continues to work correctly.	In particular with outgassing fluids and/or increased gas content, the following measures are recommended to increase system pressure: 1. Install the device at the outlet side of a pump. 2. Install the device at the lowest point of an ascending pipeline. 3. Install a flow restriction, e.g. reducer or orifice, downstream from the instrument.
702	P: FLUID INHOM. !: 702	Frequency control is not stable, due to inhomogeneous process fluid, e.g. entrained gas or solid content.	In particular with outgassing fluids and/or entrained gas content, the following measures are recommended to increase system pressure: 1. Install the device at the outlet side of a pump. 2. Install the device at the lowest point of an ascending pipeline. 3. Install a flow restriction, e.g. reducer or orifice, downstream from the instrument.

Type	Error message / No.	Cause	Remedy
703 **704**	P: NOISE LIMIT !: 703 / 704	Overdriving of the internal analog to digital converter. Causes: – Cavitation – Extreme pressure pulses – High gas flow velocity A continuation of the measurement is still possible!	Change or improve process conditions, e.g. by reducing the flow velocity.
705	P: FLOW LIMIT ϟ: # 705	The mass flow is too high. The electronics' measuring range will be exceeded.	Reduce flow
731	P: ADJ. ZERO FAIL !: 731	The zero point adjustment is not possible or has been cancelled	Make sure that zero point adjustment is carried out at "zero flow" only (v = 0 m/s) → Page 37

9.4 Process errors without messages

Symptoms	Rectification
Remark: You may have to change or correct certain settings of the function matrix in order to rectify faults. The functions outlined below, such as DISPLAY DAMPING, for example, are described in detail in the "Description of Device Functions" manual.	
Measured value reading fluctuates even though flow is steady.	1. Check liquids for the presence of gas bubbles. 2. In the "TIME CONSTANT" function (CURRENT OUTPUT) → increase value 3. In the "DISPLAY DAMPING" function (USER INTERFACE) → increase the value
Measured value reading shown on display, even though the fluid is at a standstill and the measuring tube is full.	1. Check liquids for the presence of gas bubbles. 2. Activate the "LOW FLOW CUTOFF" function (PROCESS PARAMETER), i.e. enter or increase the value for the switching point.
The fault cannot be rectified or some other fault not described above has occurred. In these instances, please contact your Endress+Hauser service organization.	The following options are available for tackling problems of this nature: **Request the services of an Endress+Hauser service technician** If you contact our service organization to have a service technician sent out, please be ready with the following information: – Brief description of the fault – Nameplate specifications (Page 7 ff.): Order code and serial number **Returning devices to Endress+Hauser** The procedures on Page 6 must be carried out before you return a flowmeter requiring repair or calibration to Endress+Hauser. Always enclose a duly completed "Declaration of contamination" form with the flowmeter. You will find a preprinted form at the back of this manual. **Replace transmitter electronics** Components in the measuring electronics defective → order replacement → Page 51

9.5 Response of outputs to errors

✎ Note!
The failsafe mode of totalizers, current, pulse and frequency outputs can be customized by means of various functions in the function matrix. You will find detailed information on these procedures in the "Description of Device Functions" manual.

Positive zero return and failsafe mode:
You can use positive zero return to set the signals of the current, pulse and frequency outputs to their fallback value, for example when measuring has to be interrupted while a pipe is being cleaned. This function takes priority over all other device functions. Simulations, for example, are suppressed.

Failsafe mode of outputs and totalizers		
	Process/system error is present	Positive zero return is activated
☞ Caution! System or process errors defined as "Notice messages" have no effect whatsoever on the inputs and outputs. See the information on → Page 24 ff.		
Current output	*MINIMUM CURRENT* The current output will be set to the lower value of the signal on alarm level depending on the setting selected in the CURRENT SPAN function (see the "Description of Device Functions" manual). *MAXIMUM CURRENT* The current output will be set to the higher value of the signal on alarm level depending on the setting selected in the CURRENT SPAN function (see the "Description of Device Functions" manual). *HOLD VALUE* Measured value display on the basis of the last saved value preceding occurrence of the fault. *ACTUAL VALUE* Measured value display on the basis of the current flow measurement. The fault is ignored.	Output signal corresponds to "zero flow"
Pulse output	*FALLBACK VALUE* Signal output → no pulses *HOLD VALUE* Last valid value (preceding occurrence of the fault) is output. *ACTUAL VALUE* Fault is ignored, i.e. normal measured value output on the basis of ongoing flow measurement.	Output signal corresponds to "zero flow"

Failsafe mode of outputs and totalizers		
	Process/system error is present	Positive zero return is activated
Frequency output	*FALLBACK VALUE* Signal output → 0 Hz *FAILSAFE LEVEL* Output of the frequency specified in the FAILSAFE VALUE function. *HOLD VALUE* Last valid value (preceding occurrence of the fault) is output. *ACTUAL VALUE* Fault is ignored, i.e. normal measured value output on the basis of ongoing flow measurement.	Output signal corresponds to "zero flow"
Totalizer	*STOP* The totalizers are paused until the error is rectified. *ACTUAL VALUE* The fault is ignored. The totalizers continue to count in accordance with the current flow value. *HOLD VALUE* The totalizers continue to count the flow in accordance with the last valid flow value (before the error occurred).	Totalizer stops
Status output	In the event of a fault or power supply failure: Status → non-conductive	No effect on the status output

9.6 Spare parts

Chapter 9.1 contains a detailed trouble-shooting guide. The measuring device, moreover, provides additional support in the form of continuous self-diagnosis and error messages.
Fault rectification can entail replacing defective components with tested spare parts. The illustration below shows the available scope of spare parts.

✎ Note!
You can order spare parts directly from your Endress+Hauser service organization by providing the serial number printed on the transmitter's nameplate (see Page 7).

Spare parts are shipped as sets comprising the following parts:
- Spare part
- Additional parts, small items (threaded fasteners, etc.)
- Mounting instructions
- Packaging

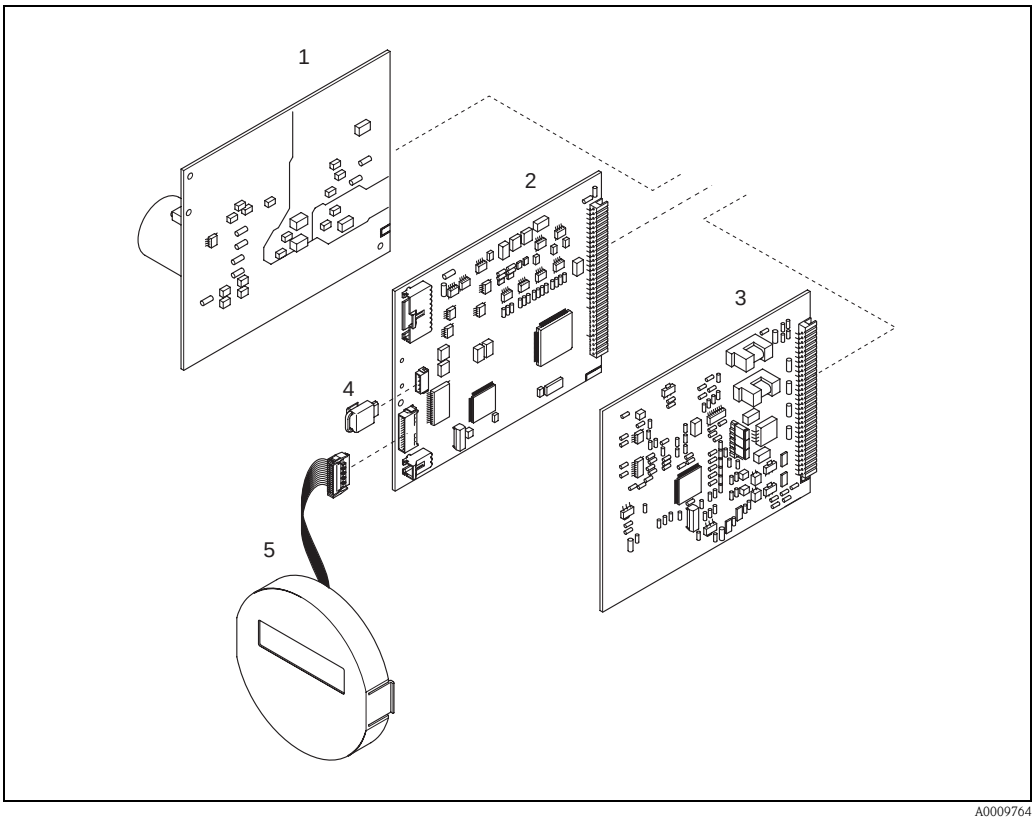

Fig. 18: Spare parts for Promass 40 transmitter

1 Power unit board (85…260 V AC, 20…55 V AC, 16…62 V DC)
2 Amplifier board
3 COM module (I/O board)
4 S-DAT (sensor data memory)
5 Display module

9.7 Removing and installing printed circuit boards

⚠ Warning!

- Risk of electric shock. Exposed components carry dangerous voltages. Make sure that the power supply is switched off before you remove the cover of the electronics compartment.
- Risk of damaging electronic components (ESD protection). Static electricity can damage electronic components or impair their operability. Use a workplace with a grounded working surface purposely built for electrostatically sensitive devices!
- If you cannot guarantee that the dielectric strength of the device is maintained in the following steps, then an appropriate inspection must be carried out in accordance with the manufacturer's specifications.

1. Unscrew cover of the electronics compartment from the transmitter housing (see Fig. 19).
2. Remove the local display (1) as follows:
   – Press in the latches (1.1) at the side and remove the display module.
   – Disconnect the ribbon cable (1.2) of the display module from the amplifier board.
3. Remove the screws and remove the cover (3) from the electronics compartment.
4. Remove power unit board and I/O board (4, 6):
   Insert a thin pin into the hole (3) provided for the purpose and pull the board clear of its holder.
5. Remove amplifier board (5):
   – Disconnect the plug of the sensor signal cable (5.1) including S-DAT (5.3) from the board.
   – Loosen the plug of the excitation current cable (5.2) and gently disconnect the plug from the board, i.e. without moving it back and forth.
   – Insert a thin pin into the hole (3) provided for the purpose and pull the board clear of its holder.
6. Installation is the reverse of the removal procedure.

☞ Caution!
Use only original Endress+Hauser parts.

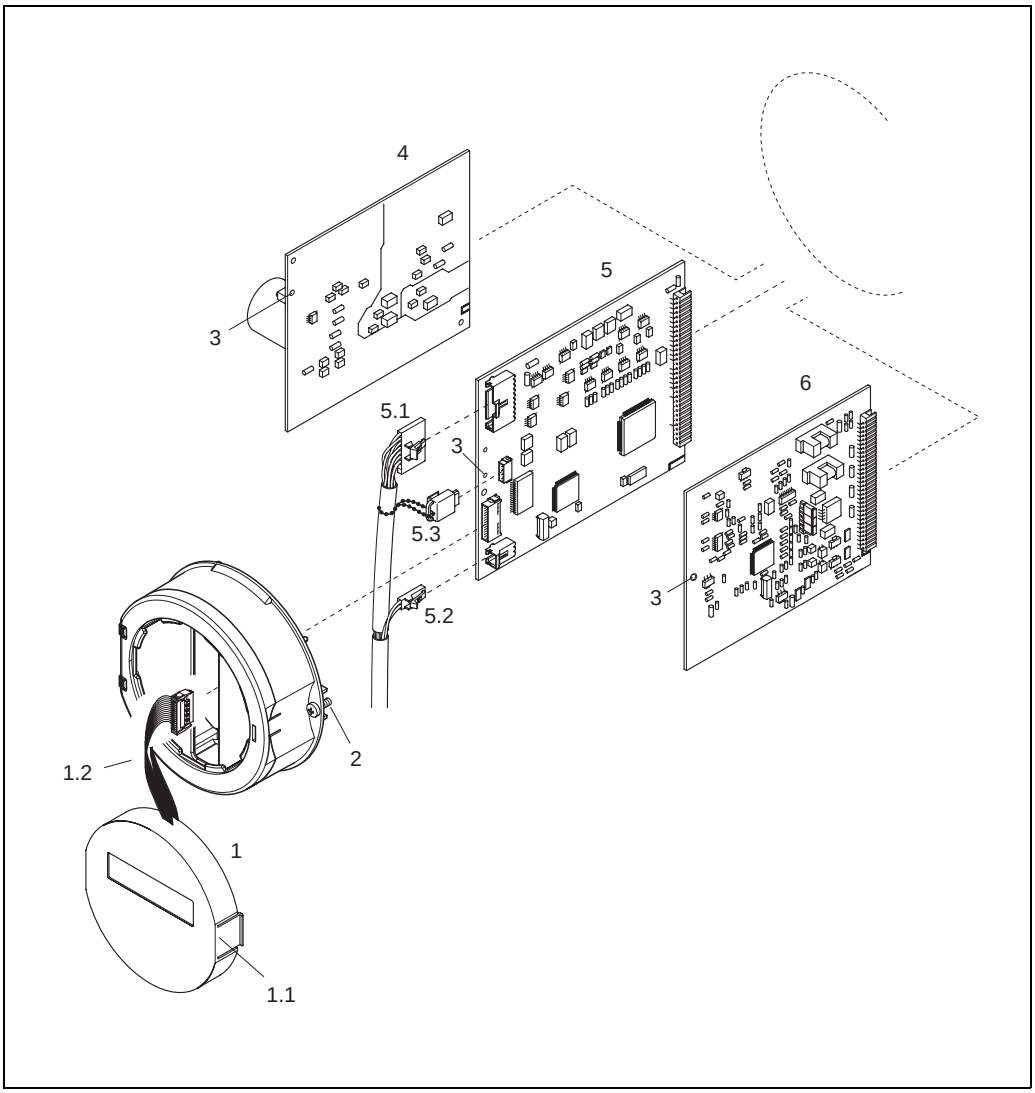

Fig. 19: Removing and installing printed circuit boards

1 Local display
1.1 Latch
1.2 Ribbon cable (display module)
2 Screws of electronics compartment cover
3 Aperture for installing/removing boards
4 Power unit board
5 Amplifier board
5.1 Signal cable (sensor)
5.2 Excitation current cable (sensor)
5.3 S-DAT (sensor data memory)
6 I/O board

9.8 Replacing the device fuse

Warning!
Risk of electric shock. Exposed components carry dangerous voltages. Make sure that the power supply is switched off before you remove the cover of the electronics compartment.

The main fuse is on the power unit board (Fig. 20).
The procedure for replacing the fuse is as follows:

1. Switch off power supply.
2. Remove the power unit board → Page 52
3. Remove cap (1) and replace the device fuse (2).
   Use only fuses of the following type:
   – Power supply 20…55 V AC / 16…62 V DC → 2.0 A slow-blow / 250 V; 5.2 x 20 mm
   – Power supply 85…260 V AC → 0.8 A slow-blow / 250 V; 5.2 x 20 mm
   – Ex-rated devices → see the Ex documentation.
4. Assembly is the reverse of the disassembly procedure.

   Caution!
   Use only original Endress+Hauser parts.

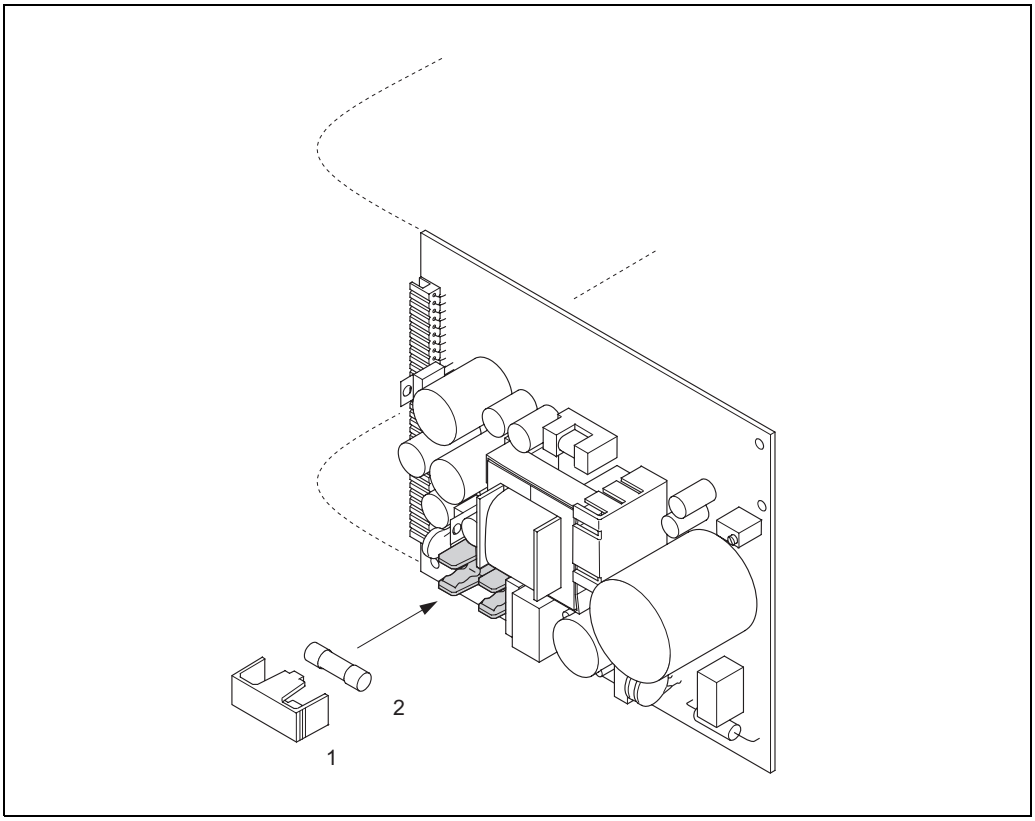

Fig. 20: Replacing the device fuse on the power unit board

1 Protective cap
2 Device fuse

9.9 Return

→ Page 6

9.10 Disposal

Observe the regulations applicable in your country!

9.11 Software history

Date	Software version	Changes to software	Operating Instructions
01.2010	3.01.xx	New functionalities: – Calibration history – Life zero	71111274/03.10
09.2008	3.00.xx	– New amplifier hardware – Enhancement gas measuring range – New SIL evaluation	71079875/09.08
11.2004	2.00.xx	Software expansion: – Corrected volume flow measurement – Adjustments to Fieldcheck and Simubox – Reset error history New functionalities: – Empty pipe detection via exciting current (EPD EXC.CURR. MAX) – DEVICE SOFTWARE→ Device software displayed ((NAMUR recommendation 53) – Operation hours counter – Intensity of background illumination adjustable – Simulation pulse output – Counter for access code – Up-/Download with ToF-Tool - Fieldtool Package – 2nd totalizer Configurable via: – ToF Tool - Fieldtool Package (the latest SW version can be downloaded under: www.tof-fieldtool.endress.com)	50098507/11.04
09.2002	Amplifier: 1.04.00 Communication module: 1.02.00	Software adjustment/expansion: – Promass E – Ex i current output, frequency output – General instrument functions – HART operating via Universal Commands and Common Practice Commands New functionalities: – Function PULSE WIDTH – Function CURRENT SPAN – Function FAILSAFE MODE	50098513/11.01
11.2000	Amplifier: 1.00.xx Communication module: 1.01.xx	Original software Configurable via: – ToF Tool - Fieldtool Package – HART Communicator DXR 275 (OS 4.6 or higher) with Rev. 1, DD 1	50098507/11.00

✎ Note!
Usually, an upload or download between the different software versions is only possible with a special service software.

10 Technical data

10.1 Technical data at a glance

10.1.1 Applications

The measuring device is for mass flow and volume flow measurement of liquids and gases in sealed piping systems. Application examples:

- additives
- oils, fats
- acids, alkalis
- lacquers, paints
- suspensions
- gases

10.1.2 Function and system design

Measuring principle

Mass flow measurement by the Coriolis principle

Measuring system

The measuring system consists of a transmitter and a sensor:
- Promass 40 transmitter
- Promass E sensor

10.1.3 Input

Measured variable

- Mass flow (proportional to the phase difference between two sensors mounted on the measuring tube to register a phase shift in the oscillation)
- Volume flow (calculated from mass flow and fluid density, which is proportional to the resonance frequency of the measuring tubes)
- Fluid temperature (registered by temperature sensors) for compensating temperature effects.

Measuring range

Measuring ranges for liquids:

DN		Range for full scale values (liquids) $\dot{m}_{min(F)}$ to $\dot{m}_{max(F)}$	
[mm]	[inch]	[kg/h]	[lb/min]
8	3/8"	0 to 2000	0 to 73.5
15	½"	0 to 6500	0 to 238
25	1"	0 to 18000	0 to 660
40	1½"	0 to 45000	0 to 1650
50	2"	0 to 70000	0 to 2570
80	3"	0 to 180000	0 to 6600

Measuring ranges for gases:
The full scale values depend on the density of the gas. Use the formula below to calculate the full scale values:

$$\dot{m}_{max(G)} = \dot{m}_{max(F)} \cdot \frac{\rho_{(G)}}{x\ [kg/m^3]}$$

$\dot{m}_{max\ (G)}$ = Max. full scale value for gas [kg/h]
$\dot{m}_{max\ (F)}$ = Max. full scale value for liquid [kg/h]
$\rho_{(G)}$ = Gas density in [kg/m^3] under process conditions

DN [mm]	DN [inch]	x
8	3/8"	85
15	½"	110
25	1"	125
40	1½"	125
50	2"	125
80	3"	155

Calculation example for gas:
- Sensor type: Promass E, DN 50
- Gas: air with a density of 60.3 kg/m^3 (at 20 °C and 50 bar)
- Measuring range: 70000 kg/h
- x = 125 (for Promass E, DN 50)

Max. possible full scale value:

$$\dot{m}_{max(G)} = \frac{\dot{m}_{max(F)} \cdot \rho_{(G)}}{x\ kg/m^3} = \frac{70000\ kg/h \cdot 60.3\ kg/m^3}{125\ kg/m^3} = 33800\ kg/h$$

Recommended full scale values:
→ Page 62 ("Limiting flow")

Operable flow range

Flowrates above the preset full scale value do not overload the amplifier, i.e. the totalizer values are registered correctly.

Input signal

Status input (auxiliary input):
U = 3…30 V DC, R_i = 5 kΩ, galvanically isolated.
Configurable for: totalizer reset, positive zero return, error message reset, zero point adjustment.

10.1.4 Output

Output signal	Current output: Active/passive selectable, galvanically isolated, time constant selectable (0.05…100 s), full scale value selectable, temperature coefficient: typically 0.005% o.f.s./°C; resolution: 0.5 µA ■ active: 0/4…20 mA, R_L < 700 Ω (for HART: R_L ≥ 250 Ω) ■ passive: 4…20 mA, supply voltage U_S = 18…30 V DC, R_i ≥ 150 Ω Pulse / frequency output: Passive, open collector, 30 V DC, 250 mA, galvanically isolated. ■ Frequency output: full scale frequency 2…1000 Hz (f_{max} = 1250 Hz), on/off ratio 1:1, pulse width max. 10 s ■ Pulse output: pulse value and pulse polarity selectable, max. pulse width adjustable (0.5…2000 ms), max. pulse frequency selectable
Signal on alarm	■ Current output → failsafe mode selectable (e.g. acc. to NAMUR recommendation NE 43) ■ Pulse/frequency output → failsafe mode selectable ■ Status output → "non-conductive" in the event of fault or power supply failure
Load	see "Output signal"
Switching output	Status output: Open collector, max. 30 V DC / 250 mA, galvanically isolated. Configurable for: error messages, Empty Pipe Detection (EPD), flow direction, limit values
Low flow cutoff	Switch points for low flow cut off are selectable
Galvanic isolation	All circuits for inputs, outputs, and power supply are galvanically isolated from each other.

10.1.5 Auxiliary energy

Electrical connections	see Page 19 ff.
Supply voltage	85…260 V AC, 45…65 Hz 20…55 V AC, 45…65 Hz 16…62 V DC
Potential equalization	No measures necessary.
Cable entries	Power supply and signal cables (inputs/outputs): ■ Cable entry M20 x 1.5 (8 to 12 mm / 0,31" to 0,47") ■ Threads for cable entries 1/2" NPT, G 1/2"
Power consumption	AC: <15 VA (including sensor) DC: <15 W (including sensor) Switch-on current: ■ max. 13.5 A (< 50 ms) at 24 V DC ■ max. 3 A (< 5 ms) at 260 V AC
Power supply failure	Lasting min. 1 power cycle: ■ EEPROM saves measuring system data if power supply fails. ■ HistoROM/S-DAT is an exchangeable data storage chip with sensor specific data (nominal diameter, serial number, calibration factor, zero point, etc.)

10.1.6 Performance characteristics

Reference operating conditions

- Error limits following ISO/DIN 11631
- Water, typically 20 to 30 °C (68 to 86 °F); 2 to 4 bar (30 to 60 psi)
- Data according to calibration protocol ±5 °C (±9 °F) and ±2 bar (±30 psi)
- Accuracy based on accredited calibration rigs according to ISO 17025

Maximum measured error

The following values refer to the pulse/frequency output.
Measured error at the current output is typically ±5 µA.

Design fundamentals → Page 61

o.r. = of reading

Mass flow and volume flow (liquids)
±0.50% o.r.

Mass flow (gases)
±1.00% o.r.

Density (liquid)
- ±0.0005 g/cc (under reference conditions)
- ±0.0005 g/cc (after field density calibration under process conditions)
- ±0.02 g/cc (over the entire measuring range of the sensor)

Temperature
±0.5 °C ± 0.005 · T °C
(±1 °F ± 0.003 · (T - 32) °F)

T = medium temperature

Zero point stability

DN		Zero point stability	
[mm]	[inch]	[kg/h] or [l/h]	[lb/min]
8	3/8"	0.20	0.0074
15	½"	0.65	0.0239
25	1"	1.80	0.0662
40	1½"	4.50	0.1654
50	2"	7.00	0.2573
80	3"	18.00	0.6615

Example for max. measured error

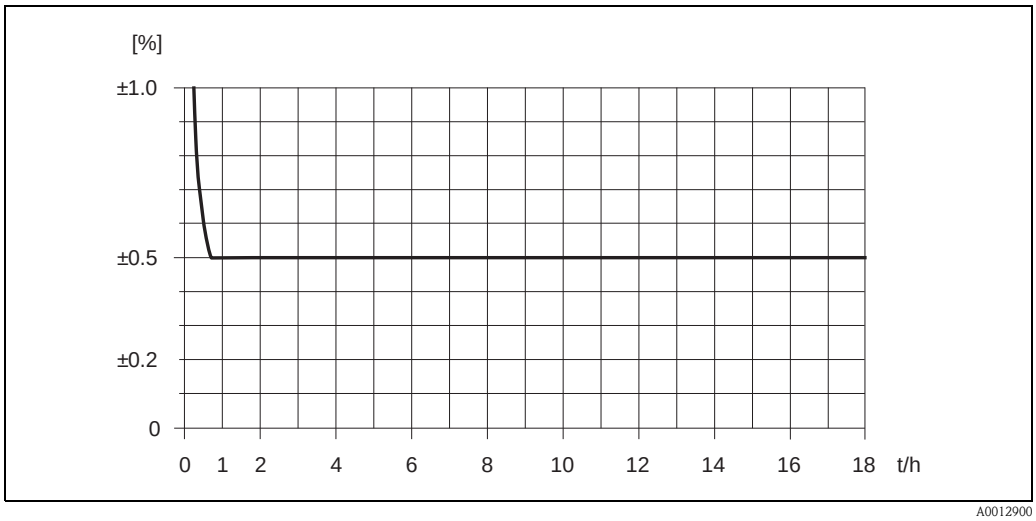

Fig. 21: Max. measured error in % of measured value (example: Promass 40E / DN 25)

Flow values (example)

Design fundamentals → Page 61

Turn down	Flow		Max. measured error
	[kg/h] bzw. [l/h]	[lb/min]	[% o.r.]
250 : 1	72	2.646	2.5
100 : 1	180	6.615	1.0
50 : 1	360	13.23	0.5
10 : 1	1800	66.15	0.5
2 : 1	9000	330.75	0.5

o.r. = of reading

Repeatability

Design fundamentals → Page 61

o.r. = of reading

Mass flow and volume flow (liquids)
±0.25% o.r.

Mass flow (gases)
±0.50% o.r.

Density (liquids)
±0.00025 g/cc

1 g/cc = 1 kg/l

Temperature
±0.25 °C ± 0.0025 · T °C
(±0.5 °F ± 0.0015 · (T – 32) °F)

T = medium temperature

Influence of fluid temperature

When there is a difference between the temperature for zero point adjustment and the process temperature, the typical measured error of the Promass sensor is ±0.0003% of the full scale value / °C (±0.0001% of the full scale value / °F).

Influence of fluid pressure

The table below shows the effect on accuracy of mass flow due to a difference between calibration pressure and process pressure.

DN		Promass E
[mm]	[inch]	[% o.r./bar]
8	3/8"	no influence
15	½"	no influence
25	1"	no influence
40	1½"	no influence
50	2"	–0.009
80	3"	–0.020

o.r. = of reading

Design fundamentals

Dependent on the flow:

- Flow ≥ Zero point stability ÷ (base accuracy ÷ 100)
  - Max. measured error: ±base accuracy in % o.r.
  - Repeatability: ± ½ · base accuracy in % o.r.

- Flow < Zero point stability ÷ (base accuracy ÷ 100)
  - Max. measured error: ± (Zero point stability ÷ measured value) · 100% o.r.
  - Repeatability: ± ½ · (Zero point stability ÷ measured value) · 100% o.r.

o.r. = of reading

Base accuracy for:	Promass 40E
Mass flow liquids	0.50
Volume flow liquids	0.50
Mass flow gases	1.00

10.1.7 Operating conditions (installation)

Installation instructions

→ Page 12 ff.

Inlet and outlet runs

There are no installation requirements regarding inlet and outlet runs.

System pressure

→ Page 13

10.1.8 Operating conditions (environment)

Ambient temperature	Sensor, transmitter ■ Standard: –20…+60 °C (-4 to +140°F) ■ Optional: –40…+60 °C (-40 to +140°F) ✎ Note! ■ Install the device in a shady location. Avoid direct sunlight, particularly in warm climatic regions. ■ At ambient temperatures below –20 °C (-4°F) the readability of the display may be impaired.
Storage temperature	–40…+80 °C (–40 to +175 °F), preferably +20 °C (+68 °F)
Degree of protection	Standard: IP 67 (NEMA 4X) for transmitter and sensor
Shock resistance	According to IEC 68-2-31
Vibration resistance	Acceleration up to 1 g, 10…150 Hz, following IEC 68-2-6
Electromagnetic compatibility (EMC)	To IEC/EN 61326 and NAMUR recommendation NE 21

10.1.9 Operating conditions (process)

Medium temperature range	Sensor: ■ –40…+140 °C (–40…+284 °F) Seals: ■ no internal seals
Fluid pressure limit (nominal pressure)	■ Flanges: according to EN (DIN) PN 40…100 / acording to ANSI Cl 150, Cl 300, Cl 600 / JIS 10K, 20K, 40K, 63K ■ The Promass E sensor does not have a secondary containment
Rupture disk in the sensor housing (optional)	The sensor housing protects the inner electronics and mechanics and is filled with dry nitrogen. The housing of this sensor does not fulfill any additional secondary containment function. However, 15 bar (217.5 psi) can be specified as a reference value for the pressure loading capacity. For increased safety, a version with rupture disk (triggering pressure 10 to 15 bar (145 to 217.5 psi)) can be used, which is available for order as a separate option.
Limiting flow	Select nominal diameter by optimizing between required flow range and permissible pressure loss. See chapter "Measuring range" for a list of maximum possible full scale values → Page 56 ff. ■ The minimum recommended full scale value is approx. $^{1}/_{20}$ of the maximum full scale value. ■ In most applications, 20…50% of the maximum full scale value can be considered ideal. ■ Select a lower full scale value for abrasive substances such as fluids with entrained solids (flow velocity < 1 m/s (< 3 ft/s)). ■ For gas measurement the following rules apply: – Flow velocity in the measuring tubes should not be more than half the sonic velocity (0.5 Mach). – The maximum mass flow depends on the density of the gas (formula → Page 57).

Pressure loss (SI units)

Pressure loss depends on the properties of the fluid and on the flow. The following formulas can be used to approximately calculate the pressure loss:

Reynolds number	$Re = \frac{2 \cdot \dot{m}}{\pi \cdot d \cdot \upsilon \cdot \rho}$
$Re \geq 2300$ [1]	$\Delta p = K \cdot \upsilon^{0.25} \cdot \dot{m}^{1.85} \cdot \rho^{-0.86}$
$Re < 2300$	$\Delta p = K1 \cdot \upsilon \cdot \dot{m} + \frac{K2 \cdot \upsilon^{0.25} \cdot \dot{m}^{2}}{\rho}$

Δp = pressure loss [mbar]
υ = kinematic viscosity [m^2/s]
$\dot{m}$ = mass flow [kg/s]
ρ = fluid density [kg/m^3]
d = inside diameter of measuring tubes [m]
K…K2 = constants (depending on nominal diameter)

[1] To compute the pressure loss for gases, always use the formula for $Re \geq 2300$.

Pressure loss coefficient

DN	d [m]	K	K1	K2
8	$5.35 \cdot 10^{-3}$	$5.70 \cdot 10^{7}$	$7.91 \cdot 10^{7}$	$2.10 \cdot 10^{7}$
15	$8.30 \cdot 10^{-3}$	$7.62 \cdot 10^{6}$	$1.73 \cdot 10^{7}$	$2.13 \cdot 10^{6}$
25	$12.00 \cdot 10^{-3}$	$1.89 \cdot 10^{6}$	$4.66 \cdot 10^{6}$	$6.11 \cdot 10^{5}$
40	$17.60 \cdot 10^{-3}$	$4.42 \cdot 10^{5}$	$1.35 \cdot 10^{6}$	$1.38 \cdot 10^{5}$
50	$26.00 \cdot 10^{-3}$	$8.54 \cdot 10^{4}$	$4.02 \cdot 10^{5}$	$2.31 \cdot 10^{4}$
80	$40.50 \cdot 10^{-3}$	$1.44 \cdot 10^{4}$	$5.00 \cdot 10^{5}$	$2.30 \cdot 10^{4}$

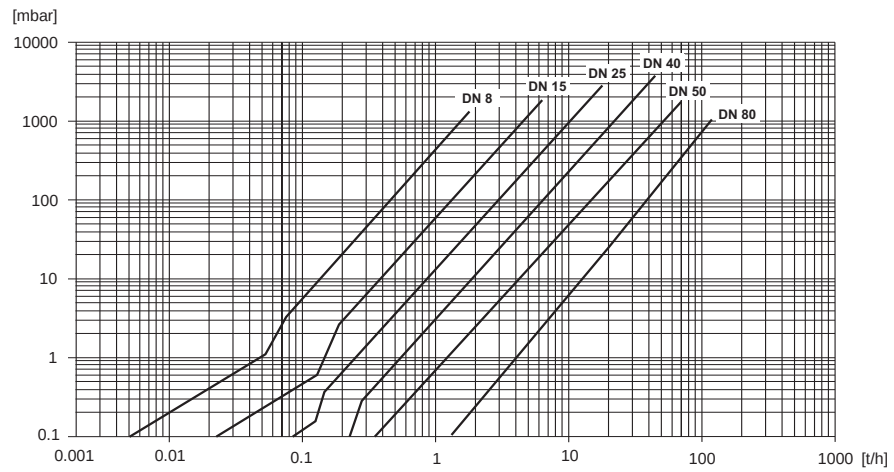

A0004606

Fig. 22: Pressure loss diagram with water

Pressure loss (US units)

Pressure loss is dependent on fluid properties nominal diameter. Consult Endress+Hauser for Applicator PC software to determine pressure loss in US units. All important instrument data is contained in the Applicator software program in order to optimize the design of measuring system.

The software is used for following calculations:
- Nominal diameter of the sensor with fluid characteristics such as viscosity, density, etc.
- Pressure loss downstream of the measuring point.
- Converting mass flow to volume flow, etc.
- Simultaneous display of various meter size.
- Determining measuring ranges.

The Applicator runs on any IBM compatible PC with windows.

10.1.10 Mechanical construction

Design / dimensions

The dimensions and lengths of the sensor and transmitter are provided in the separate "Technical Information" document on the measuring instrument in question. This can be downloaded as a PDF file from www.endress.com. A list of the "Technical Information" documents available is provided in the "Documentation" section → Page 66.

Weight

Weight in SI units

DN [mm]	8	15	25	40	50	80
Compact version	8	8	10	15	22	31

All values (weight) refer to devices with EN/DIN PN 40 flanges
Weight information in [kg]

Weight in US units

DN [inch]	3/8"	½"	1"	1½"	2"	3"
Compact version	18	18	22	33	49	69

All values (weight) refer to devices with EN/DIN PN 40 flanges
Weight information in [lbs]

Materials	*Transmitter housing* ■ Powder coated die-cast aluminum ■ Window material: glass or polycarbonate *Sensor housing* ■ Acid and alkali-resistant outer surface ■ Stainless steel 1.4301/ASTM 304 *Process connections* ■ Stainless steel 1.4404/316L – Flanges according to EN 1092-1 (DIN 2501) and according to ASME B16.5 – DIN 11864-2 Form A (flat flange with groove) – Threaded hygienic connection: DIN 11851, SMS 1145, ISO 2853, DIN 11864-1 Form A – VCO connections ■ Stainless steel SUS 316L – Flanges to JIS B2220 *Measuring tubes* Stainless steel EN 1.4539 / ASTM 904L *Seals* Welded process connections without internal seals
Material load diagram	The material load diagrams (pressure-temperature diagrams) for the process connections are provided in the separate "Technical Information" document on the device in question. This can be downloaded as a PDF file from www.endress.com. List of the available "Technical Information" documents → Page 66
Process connections	■ Flanges according to EN 1092-1 (DIN 2501), according to ASME B16.5, JIS B2220, VCO connections ■ Sanitary connections: Tri-Clamp, threaded hygienic connections (DIN 11851, SMS 1145, ISO 2853, DIN 11864-1), DIN 11864-2 Form A (flat flange with groove)

10.1.11 Human interface

Display element	■ Liquid crystal display (optional): illuminated, two lines with 16 characters per line ■ Selectable display of different measured values and status variables ■ At ambient temperatures below –20 °C (–4 °F) the readability of the display may be impaired
Languages	Display languages: French, Spanish, Italian, Dutch, Portuguese, German
Remote operation	■ HART protocol (handheld communicator) ■ FieldCare" from Endress+Hauser ■ AMS configuration programs (Fisher Rosemount), SIMATIC PDM (Siemens)

10.1.12 Certificates and approvals

Ex Approvals	Information about currently available Ex versions (ATEX, FM, CSA, IECEx, NEPSI) can be supplied by your Endress+Hauser Sales Center on request. All explosion protection data are given in a separate documentation which is available upon request.
Sanitary compatibility	3A authorization
Pressure device approval	Flowmeters with a nominal diameter smaller or equal DN 25 are covered by Art. 3(3) of the European directive 97/23/EC (Pressure Equipment Directive) and are designed according to sound engineer practice. For larger nominal diameters, optional approvals according to Cat. II/III are available when required (depends on fluid and process pressure).
CE mark	The measuring system complies with the EMC requirements of the "Australian Communications and Media Authority (ACMA)".
C-Tick mark	The measuring system is in conformity with the EMC requirements of the Australian Communications Authority (ACMA).
Other standards and guidelines	EN 60529: Degrees of protection by housing (IP code) EN 61010-1: Protection Measures for Electrical Equipment for Measurement, Control, Regulation and Laboratory Procedures. IEC/EN 61326 "Emission in accordance with requirements for Class A". Electromagnetic compatibility (EMC-requirements) NAMUR NE 21: Electromagnetic compatibility (EMC) of industrial process and laboratory control equipment. NAMUR NE 43: Standardization of the signal level for the breakdown information of digital transmitters with analog output signal. NAMUR NE 53: Software of field devices and signal-processing devices with digital electronics

10.1.13 Ordering information

The Endress+Hauser service organization can provide detailed ordering information and information on the order codes upon request.

10.1.14 Accessories

There are no accessories for transmitter and sensor.

10.1.15 Documentation

- Technical Information Promass 40 (TI055D/06/en)
- Description of Device Functions Promass 40 (BA062D/06/en)
- Supplementary documentation on Ex-ratings: ATEX, FM, CSA, IECEx, NEPS

Index

W

Z

Declaration of Contamination
Erklärung zur Kontamination

Endress+Hauser
People for Process Automation

Because of legal regulations and for the safety of our employees and operating equipment, we need the "declaration of contamination", with your signature, before your order can be handled. Please make absolutely sure to include it with the shipping documents, or – even better – attach it to the outside of the packaging.
Aufgrund der gesetzlichen Vorschriften und zum Schutz unserer Mitarbeiter und Betriebseinrichtungen, benötigen wir die unterschriebene "Erklärung zur Kontamination", bevor Ihr Auftrag bearbeitet werden kann. Legen Sie diese unbedingt den Versandpapieren bei oder bringen Sie sie idealerweise außen an der Verpackung an.

Type of instrument / sensor
Geräte-/Sensortyp _____

Serial number
Seriennummer _____

Process data/ *Prozessdaten*

Temperature / *Temperatur* _____ [°C] Pressure / *Druck* _____ [Pa]

Conductivity / *Leitfähigkeit* _____ [S] Viscosity / *Viskosität* _____ [mm^2/s]

Medium and warnings
Warnhinweise zum Medium

	Medium /concentration *Medium /Konzentration*	Identification CAS No.	flammable *entzündlich*	toxic *giftig*	corrosive *ätzend*	harmful/ irritant *gesundheits-schädlich/ reizend*	other * *sonstiges**	harmless *unbedenklich*
Process medium / *Medium im Prozess*								
Medium for process cleaning / *Medium zur Prozessreinigung*								
Returned part cleaned with / *Medium zur Endreinigung*								

* explosive; oxidising; dangerous for the environment; biological risk; radioactive
* *explosiv; brandfördernd; umweltgefährlich; biogefährlich; radioaktiv*

Please tick should one of the above be applicable, include security sheet and, if necessary, special handling instructions.
Zutreffendes ankreuzen; trifft einer der Warnhinweise zu, Sicherheitsdatenblatt und ggf. spezielle Handhabungsvorschriften beilegen.

Reason for return / *Grund zur Rücksendung* _____

_____

_____

Company data / *Angaben zum Absender*

Company / *Firma* _____

_____

Address / *Adresse*

_____

_____

Contact person / *Ansprechpartner* _____

Department / *Abteilung* _____

Phone number/ *Telefon* _____

Fax / E-Mail _____

Your order No. / *Ihre Auftragsnr.* _____

We hereby certify that the returned parts have been carefully cleaned. To the best of our knowledge they are free from any residues in dangerous quantities.
Hiermit bestätigen wir, dass die zurückgesandten Teile sorgfältig gereinigt wurden, und nach unserem Wissen frei von Rückständen in gefahrbringender Menge sind.

P/SF/Konta VIII

_____
(place, date / *Ort, Datum*)

_____
(Company stamp and legally binding signature)
(Firmenstempel und rechtsverbindliche Unterschrift)

www.endress.com/worldwide

Endress+Hauser

People for Process Automation

BA061D/06/en/03.10
71111274
FM+SGML 6.0