Level Pressure Flow Temperature Liquid Analysis Registration Systems Components Services Solutions

Operating Instructions

Stamoclean CAT221

Backwash filter

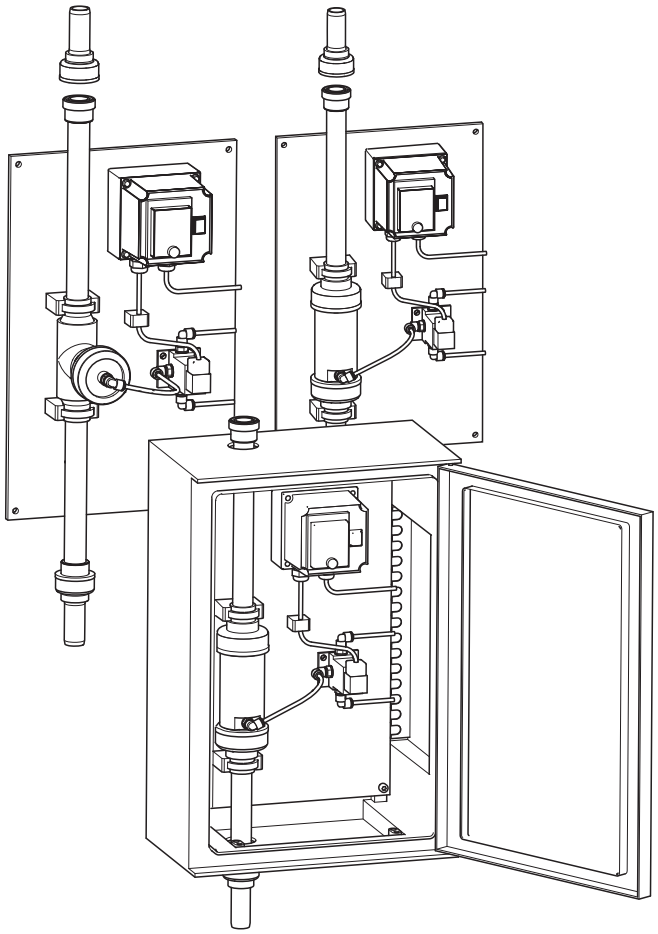

BA384C/07/EN/06.10
71116048

Endress+Hauser

People for Process Automation

Table of contents

1 Safety instructions 4

1.1 Designated use 4
1.2 Installation, commissioning and operation 4
1.3 Operational safety 4
1.4 Return 4
1.5 Safety messages and their meaning 5

2 Identification 6

2.1 Device designation 6
2.2 Scope of delivery 7
2.3 Certificates and approvals 7

3 Installation 8

3.1 Device description 8
3.2 Incoming acceptance, transport, storage 8
3.3 Installation conditions 9
3.4 Installation instructions 12
3.5 Post-installation check 12

4 Wiring 13

4.1 Electrical connection 13
4.2 Post-connection check 13

5 Operation 14

5.1 Operation and commissioning 14
5.2 Display and operating elements 14
5.3 Local operation 15

6 Commissioning. 17

6.1 Function check 17
6.2 Switch-on 17

7 Maintenance. 18

7.1 Cleaning agents 18
7.2 Cleaning the wedge wire sieve 18
7.3 Replacing the filtrate hose 18

8 Accessories. 19

8.1 Installation accessories 19
8.2 Sampling accessories 19

9 Trouble-shooting 20

9.1 Trouble-shooting instructions 20
9.2 Spare parts 20
9.3 Return 21
9.4 Disposal 21

10 Technical data 22

10.1 Power supply 22
10.2 Performance characteristics 22
10.3 Environment 22
10.4 Process 22
10.5 Mechanical construction 22

Index 24

1 Safety instructions

1.1 Designated use

The backwash filter is a special crossflow filter for water and wastewater.
It provides filtrate for continuous on-line monitoring. The filter's self-cleaning effect is achieved both by the flow at the wedge wire sieve and by backwashing with compressed air or rinse water.

Applications are:
- Municipal and industrial sewage treatment plants
  - Inlet
  - Outlet
- Process water with low solids content

Any other use than the one described here compromises the safety of persons and the entire measuring system and is not permitted.
The manufacturer is not liable for damage caused by improper or non-designated use.

1.2 Installation, commissioning and operation

Please note the following items:
- Installation, commissioning, operation and maintenance of the measuring system must only be carried out by trained technical personnel.
  Trained personnel must be authorized for the specified activities by the system operator.
- Electrical connection must only be carried out by a certified electrician.
- Technical personnel must have read and understood these Operating Instructions and must adhere to them.
- Before commissioning the entire measuring point, check all the connections. Ensure that electrical cables and hose connections are not damaged.
- Do not operate damaged products and secure them against unintentional commissioning. Mark the damaged product as being defective.
- Measuring point faults may only be rectified by authorized and specially trained personnel.
- If faults can not be rectified, the products must be taken out of service and secured against unintentional commissioning.
- Repairs not described in these Operating Instructions may only be carried out at the manufacturer’s or by the service organization.

1.3 Operational safety

The sample preparation unit has been designed and tested according to the state of the art and left the factory in perfect functioning order.
Relevant regulations and European standards have been met.

As the user, you are responsible for complying with the following safety conditions:
- Installation instructions
- Local prevailing standards and regulations.

1.4 Return

If the device requires repair, please send it *cleaned* to the sales centre responsible. Please use the original packaging, if possible.

Please enclose the completed "Declaration of contamination" (copy the second last page of these Operating Instructions) with the packaging and the transportation documents.
No repair without completed "Declaration of contamination"!

1.5 Safety messages and their meaning

The structure, signal words and safety colors of the signs comply with the specifications of ANSI Z535.6 ("Product safety information in product manuals, instructions and other collateral materials").

Safety message structure	Meaning
⚠ DANGER **Cause (/consequences)** Consequences if safety message is not heeded ► Corrective action	This symbol alerts you to a dangerous situation. Failure to avoid the situation **will** result in a fatal or serious injury.
⚠ WARNING **Cause (/consequences)** Consequences if safety message is not heeded ► Corrective action	This symbol alerts you to a dangerous situation. Failure to avoid the situation **can** result in a fatal or serious injury.
⚠ CAUTION **Cause (/consequences)** Consequences if safety message is not heeded ► Corrective action	This symbol alerts you to a dangerous situation. Failure to avoid this situation can result in minor or medium injury.
NOTICE **Cause/situation** Consequences if safety message is not heeded ► Action/note	This symbol alerts you to situations that can result in damage to property and equipment.

2 Identification

2.1 Device designation

2.1.1 Nameplate

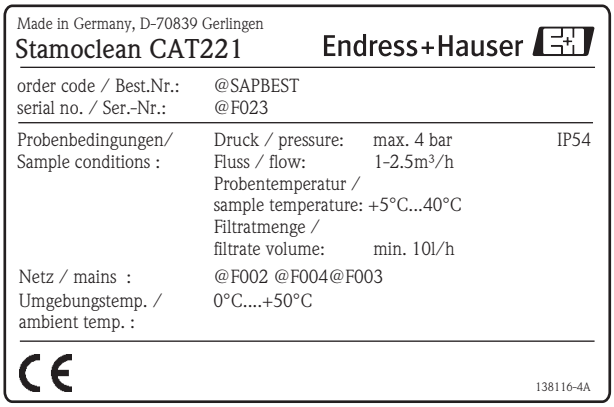

C07-CAT221xx-18-14-00-en-001.eps

Fig. 1: Example of a nameplate

2.1.2 Product structure

	Application					
	A	Outlet				
	B	Inlet				
	Y	Special version acc. to customer's specification				
		Power supply				
		0	230 V AC / 50 Hz			
		1	115 V AC / 60 Hz			
		8	24 V DC (not with housing version with heating)			
			Wedge wire sieve holes diameter			
			A	50 µm		
			B	100 µm		
			C	200 µm		
				Version		
				1	Open version	
				2	GFR housing, without heating	
				3	GFR housing, with heating (not with 24 V DC power supply)	
				9	Special version acc. to customer's specification	
					Additional equipment	
					A	Quality certificate
CAT221-						**complete order code**

2.2 Scope of delivery

The scope of delivery consists of:
- a sample preparation unit
- a connection hose to the analyzer, 2 m (6.56 ft), polyamide, I.D. 4 mm (0.16")
- a fitting 3.2 mm / 3.2 mm (0.13" / 0.13")
- a wall mounting set (with housing version only)
- Operating Instructions, English
- a quality certificate

If you have any questions, please contact your supplier or your local sales center.

2.3 Certificates and approvals

Declaration of conformity
The product meets the requirements of the harmonized European standards. It thus complies with the legal requirements of the EC directives.
The manufacturer confirms successful testing of the product by affixing the CE symbol.

3 Installation

3.1 Device description

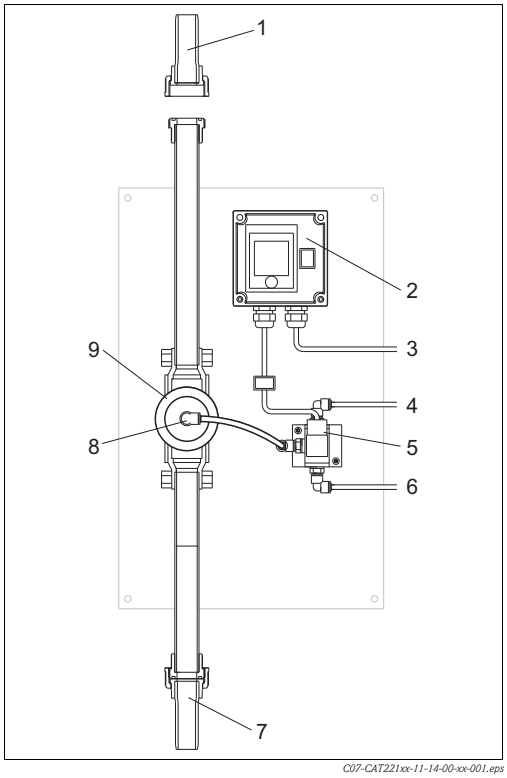

Fig. 2: Outlet version

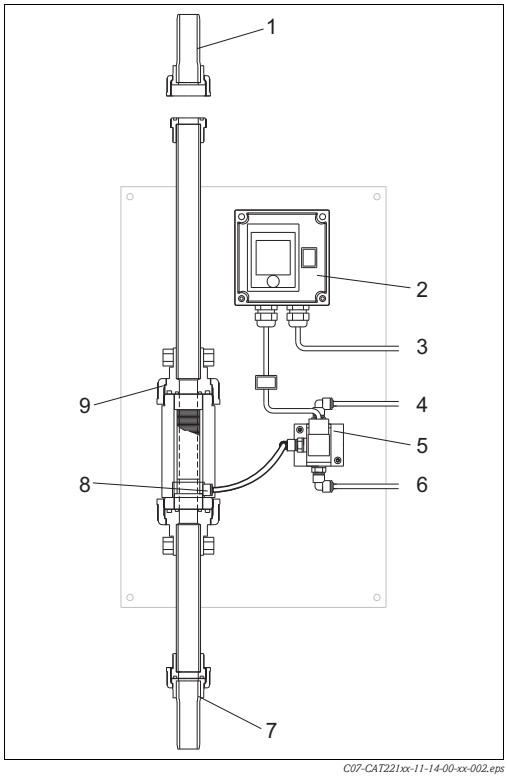

Fig. 3: Inlet version

1 Delivery hose nozzle Ø30 mm (1.18 ")
2 Control unit
3 Mains
4 Rinse water resp. rinse air
5 Valve
6 Filtrate (to the analyser)
7 Delivery hose nozzle Ø30 mm (1.18")
8 Hose adapter
9 Union nut

3.2 Incoming acceptance, transport, storage

- Make sure the packaging is undamaged!
  Inform the supplier about any damage to the packaging.
  Keep the damaged packaging until the matter has been settled.
- Make sure the contents are undamaged!
  Inform the supplier about damage to the contents. Keep the damaged products until the matter has been settled.
- Check that the order is complete and agrees with your shipping documents.
- The packaging material used to store or to transport the product must provide shock protection and humidity protection. The original packaging offers the best protection. Also, keep to the approved ambient conditions (see "Technical data").
- If you have any questions, please contact your supplier or your local sales center.

3.3 Installation conditions

3.3.1 Open inlet version

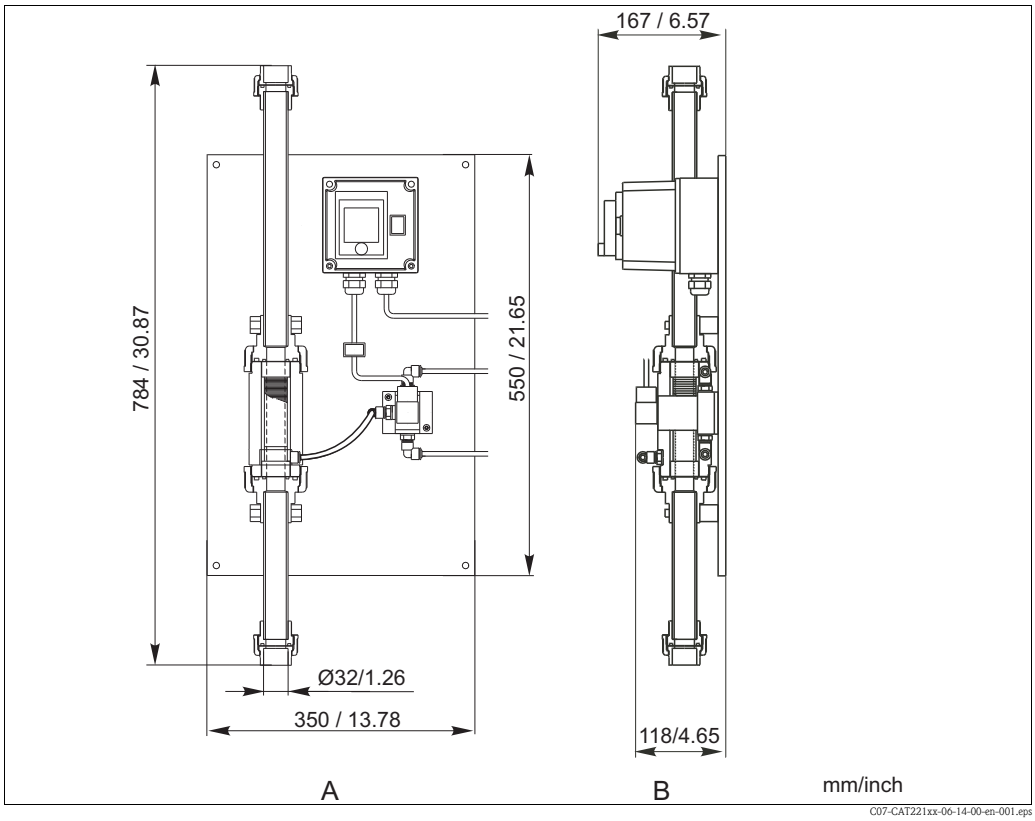

Fig. 4: Open inlet version

A Front view
B Side view

3.3.2 Open outlet version

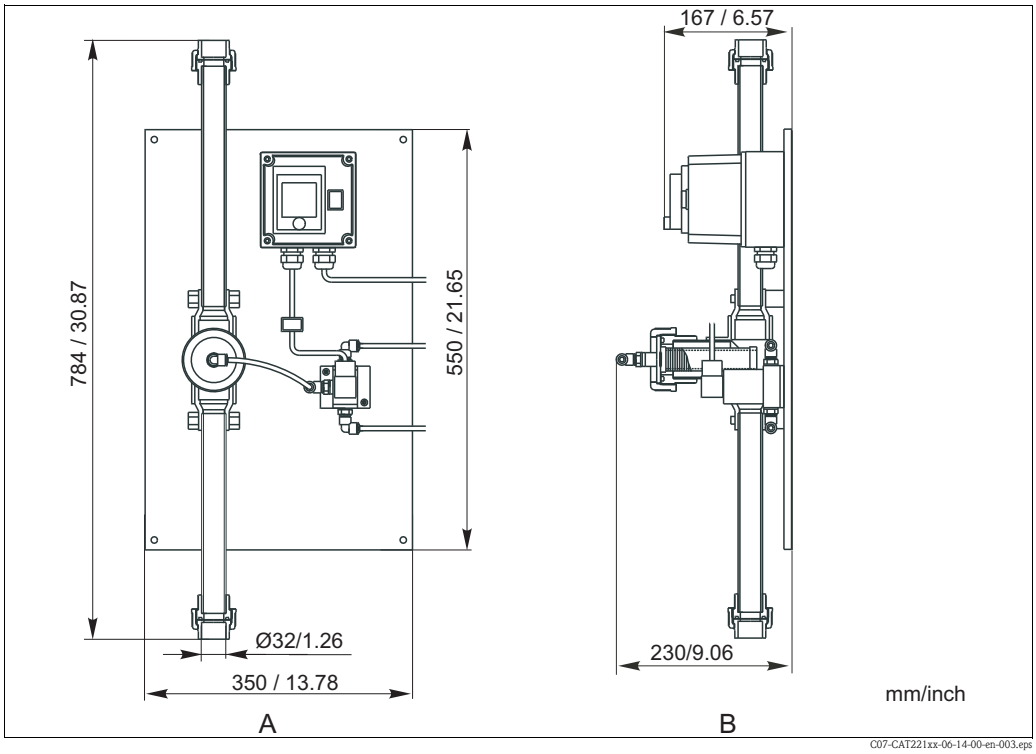

Fig. 5: Open outlet version

A Front view
B Side view

3.3.3 Housing version

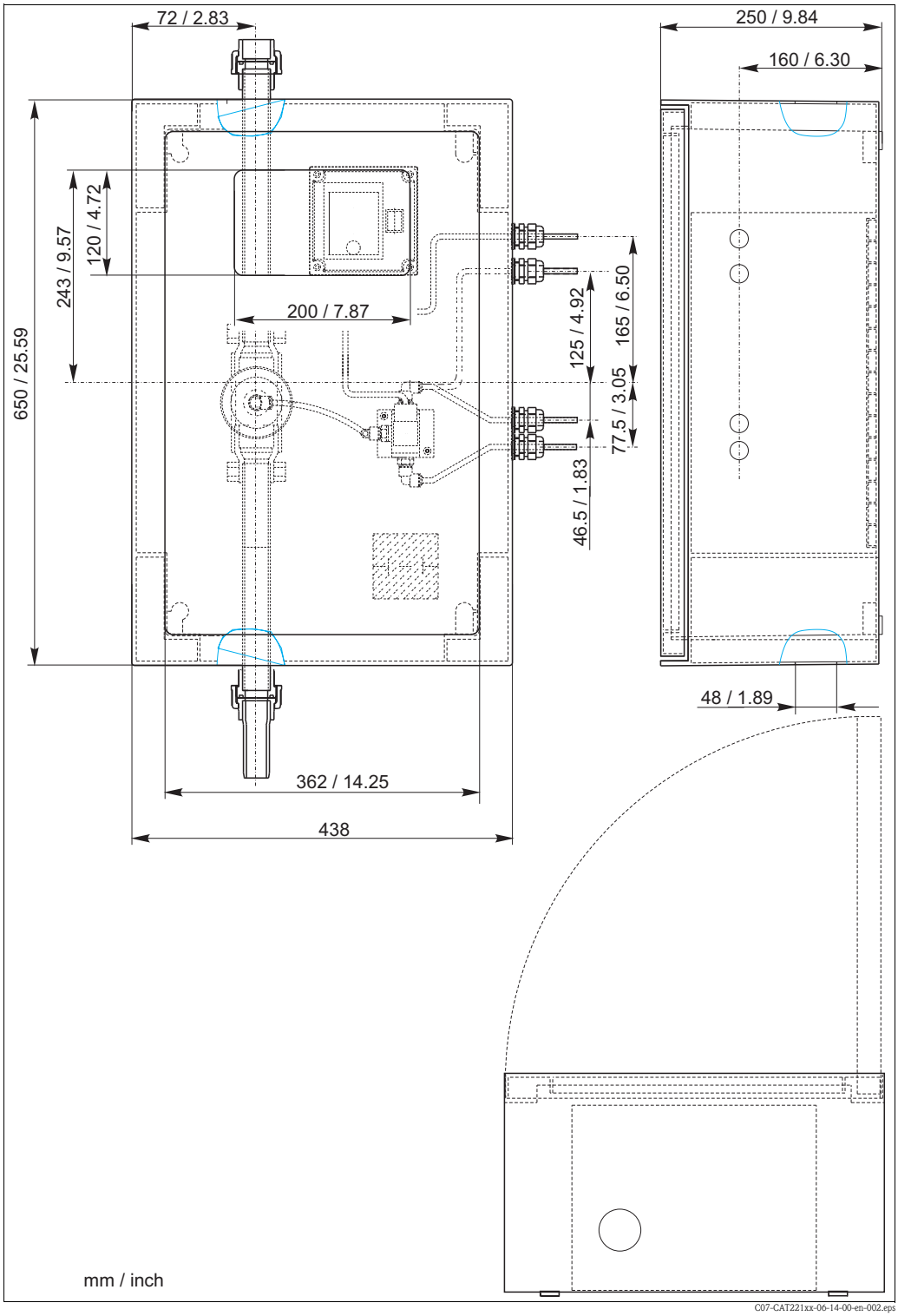

Fig. 6: Housing version

3.4 Installation instructions

The sample conditioning unit is delivered depending on the version:
- completely mounted on a base plate or
- as a housing version.

All you have to do is attach the plate to a wall using the four holes (Ø10 mm (0.39") with the base plate version resp. Ø8 mm (0.31") with the housing version).
After this, connect the sample pump resp. the sample pressure line, the filtrate line to the analyser, the outlet and the compressor resp. the compressed air line using the following figure.

A complete measuring system comprises:

- a CAT221 filter system
- a collecting vessel
- a CA71xx analyser
- a sample pump or sample pressure line
- a compressor resp. compressed air supply

Optional: nitrate or SAC sensor (CNS70/CSS70) with flow assembly

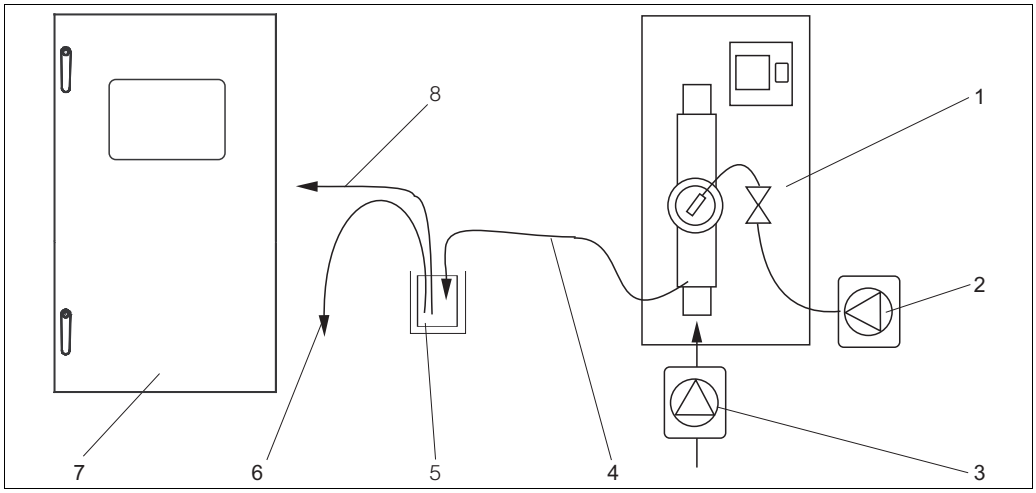

Fig. 7:	*Complete measuring system*		
1	*Backwash filter*	*5*	*Collecting vessel (optional)*
2	*Compressor or compressed air*	*6*	*Overflow*
3	*Sampling pump or sample pressure line*	*7*	*Analyser*
4	*Sample outlet*	*8*	*Sample line to the analyser*

NOTICE

Sufficient filtrate performance and siphon effect

To achieve sufficient filtrate performance, a counterpressure has to be generated on the wedge wire sieve.

► For this, there are two options: via hydrostatic pressure (at least 1 m rising mains) or via a throttle valve.

► A siphon effect[1)] counteracts point 1. Therefore, prevent a siphon effect forming at the outlet by creating a free drain or a ventilation above the rising mains or after the throttle valve.

► Recommended: use a drain valve at the inlet or work in the bypass.

3.5 Post-installation check

- After installation, check that all connections are fitted tightly and are leakage resistant.
- Ensure that the hoses cannot be removed without effort.
- Check all hoses for damage.

1) Siphon effect: line emptied by vacuum

4 Wiring

4.1 Electrical connection

Connect the power supply to terminals L1, N and PE.

A mains disconnecting device (switch or socket) must be installed near to the device. Mark this as a disconnecting device for the backwash filter.

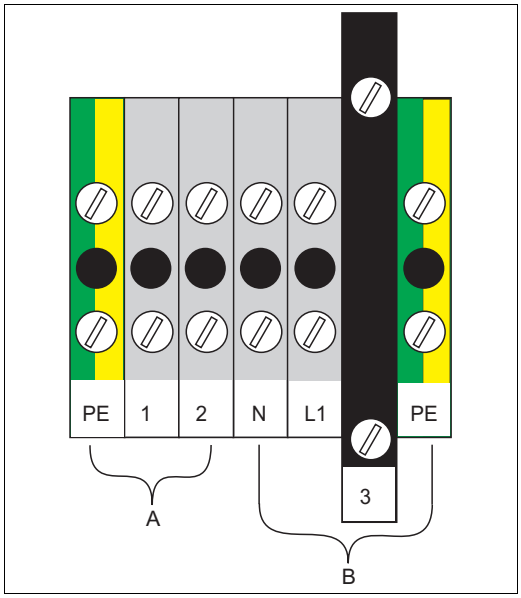

C07-CAT221xx-04-14-00-xx-001.EPS

Fig. 8: Terminals

A Valve (configured at the factory)
B Mains (to be connected by the customer)
3 Fuse

4.2 Post-connection check

Checks	Remarks
Does the supply voltage match the specifications on the nameplate?	230 V / 115 V AC / 24 V DC
Are the mounted cables slack and not twisted?	
Factory-set cable routing split properly?	Power cable/weak current cable
Are all the cable entries installed, tightened and sealed?	
Are all cable entries mounted downwards or sideways?	For sideways: Cable loops downwards, so that water drains off

5 Operation

5.1 Operation and commissioning

The following chapters provide you with information on the sample preparation unit's operating elements and explain how to make settings.
In Chap. 6, “Commissioning”, you will find the procedure for initial start-up and for daily operation.

5.2 Display and operating elements

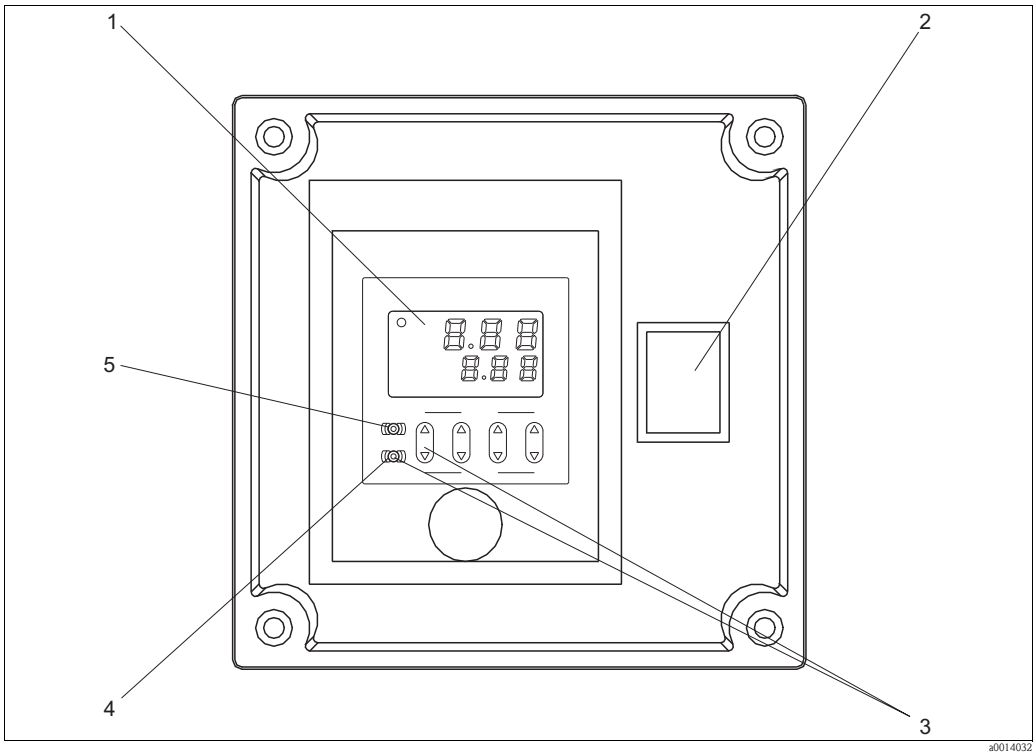

Fig. 9: Display and operating elements

1 Display
2 Mains switch
3 LOCK function (by pressing both keys)
4 SET key
5 RESET key

5.3 Local operation

Use the timer to program the rinsing interval and the duration of the rinsing process.
The **rinsing interval** is the time that passes between two rinsing processes (end of the last rinsing process to the beginning of the next one). The left solenoid valve is open between the rinsing processes (red indicator light on the valve lights up). Sample flows via the filter to the collecting vessel or to the analyser.
The **rinsing time** is the time in which the solenoid valve (right-hand) to the compressed air supply opens. This starts the backwash process. Residues on the filter are dissolved and rinsed away. In this time, the left-hand solenoid valve is closed. No sample is conveyed.

The timer can be used to set several modes that are **not** required.
For this reason, select the mode setting once and then do not change it.

Programming 2 setting times (rinsing interval and rinsing time) can be done in **Pu-b** mode. The switching operation is carried out without delay in accordance with the set times.

5.3.1 Complete programming

The following table provides an overview of the possible settings.

Parameter	Possible settings (recommendation in bold)							Note
Mode	Pu-A, **Pu-b**, Pu-c, In-A, In-b, In-c							Only use Pu-b. Setting two times is only possible in this mode.
Time range		Dip switch						The time ranges can be set by the combination of the Dip switches 1-3 and 6-8 on the timer housing side.
		1	2	3	6	7	8	
	0.01 to 99.99 s	on	on	on	on	on	on	
	0.1 to 999.9 s	off	off	off	off	off	off	
	1 to 9999 s	on	off	off	on	off	off	
	0:01 to 99:59 min:s	off	on	off	off	on	off	
	0.1 to 999.9 min	on	on	off	on	on	off	
	0:01 to 99:59 h:min	off	off	on	off	off	on	
	0.1 to 999.9 h	on	off	on	on	off	on	
	1 to 9999 h	off	on	on	off	on	on	

To set the default parameters, proceed as follows:

1. Set the mains switch to "1" (power supply on).
2. Press "SET" and the 1st Up/Down key (up or down) until the previously used mode (bottom line) is shown.
3. If Pu-b was not previously selected, use the 4th Up/Down key to select the mode.
4. Press "RESET". This saves the selected mode.
5. If you want to change the time range:
   a. Set the mains switch to "0" (power supply off).
   b. Set the desired combination of the Dip switches 1-3 and 6-8 (representing the time range) on the timer housing side (see table above).
   c. Set the mains switch to "1" (power supply on) again.

5.3.2 Setting of rinsing interval and rinsing time

The time settings for the rinsing interval and for the rinsing time can also be changed during operation (power supply "1").

Recommended settings:

- Inlet version:
  10 minutes rinse interval, 10 s rinsing time
- Outlet version:
  30 minutes rinse interval, 10 s rinsing time

Setting the rinse interval

1. If "LOCK" is shown on the display, press "SET" and the 1st Up/Down key.
2. Press "SET" until the time **T1** (rinse interval) is shown on the display.
3. Use all 4 Up/Down keys to set the time. Every Up/Down key changes one digit.
4. When you have set the last digit, save the setting by pressing "RESET".

Setting the rinsing time

1. If "LOCK" is shown on the display, press "SET" and the 1st Up/Down key.
2. Press "SET" until the time **T2** (rinsing time) is shown on the display.
3. Use all Up/Down keys to set the time. Every Up/Down key changes one digit.
4. When you have set the last digit, save the setting by pressing "RESET".

6 Commissioning

6.1 Function check

⚠ CAUTION

Leakages caused by incorrect connections

► Check that all connections have been made correctly.
► Especially check that all hose connections are firmly attached, so that no leakages occur.

6.2 Switch-on

1. Ensure that the mains switch is at "0".
2. Set the backwash pressure (at the compressor or via the compressed air line) to approx. 0.5 bar (7.25 psi) above the sample pressure, but to a maximum of 4 bar (58 psi).
3. Switch the mains switch on "1".

The sample conditioning unit is in operation.
The filtrate flows through the three-way valve for the defined time.
Then the valve audibly switches. The back wash process starts and the filtration process is interrupted.
After the defined backwash time the valve switches again. The next cycle of filtration and following backwashing starts.

7 Maintenance

All maintenance activities that have to be carried out during normal operation are described below.

7.1 Cleaning agents

⚠ WARNING

Hydrogen peroxide and bleaching lye

Hydrogen peroxide is a corrosive substance that poses a fire hazard if it comes in contact with flammable substances. Bleaching lye is a corrosive substance and causes dangerous gases to develop if it comes in contact with acids.

► Wear suitable protective clothing such as safety gloves and protective goggles.
► Avoid contact with the eyes and skin.
► Avoid chemicals coming into contact with flammable substances or acids.
► Observe additional information on the safety data sheets.

For wedge wire sieve cleaning:

- Water
- 30% hydrogen peroxide solution or 3% chlorine bleaching for higher dirt degrees
- Diluted acids or alkalines in special cases of soiling

7.2 Cleaning the wedge wire sieve

The wedge wire sieve must be cleaned manually when a high degree of soiling occurs (when no more permeate flows) or approx. every 4 weeks.

1. Switch the sample flow off and the mains switch to "0".
2. Pull off the hose from the hose adapter at the wedge wire sieve.
3. Unscrew the coupling nut.
4. Take the wedge wire sieve out.
5. Clean the wedge wire sieve with water or a cleaning agent.
6. Reinstall the wedge wire sieve. For this, complete points 2 – 5 in reverse order.
7. Switch the sample flow and the mains switch to "1".

7.3 Replacing the filtrate hose

In the course of a few months a coating builds up in the filtrate hose despite ultra filtration. It is not worth cleaning them. Replace the hoses as described below.

1. Switch the controller off.
2. Pull the filtrate hose out of the hose connector, by pressing the retaining ring of the respective plug-in connector against the pull out direction of the hose into the connector.
3. Cut hose pieces to the right size, according to the old hoses, out of the 4/2 mm (0.16/0.08") PVC hose.
4. Slide the ends of the hose all the way into the plug-in connectors.
   When inserting the hoses into the O-ring seals, a pressure point must be overcome.

8 Accessories

8.1 Installation accessories

- Three-way valve kit for backwash, 230 V;
  order no. 51516028
- Three-way valve kit for backwash, 115 V;
  order no. 51516029
- Three-way valve kit for backwash, 24 V DC;
  order no. 51516030
- Wedge wire sieves
  - Inlet
    50 µm; order no. 51516031
    100 µm; order no. 51516033
    200 µm; order no. 51516035
  - Outlet
    50 µm; order no. 51516032
    100 µm; order no. 51516034
    200 µm; order no. 51516036
- Hose adapter set
  - 1 Closing plug for quick snapping, 4 mm
  - 4 Thread connectors, angle, 4 mm
  - order no. 51516041
- Hose kit
  - ID4, AD6, PE
  - order no. 51516042
- Outlet bends
  - Bonded thread metric d32
    tube, PVC, d32x2.4
    angle d50, 90°
    T-piece, 90°, d50
    Check valve
    order no. 51516038
  - Bonded thread metric d32
    tube, PVC, d32x2.4
    angle d50, 90°
    order no. 51516039

8.2 Sampling accessories

- Compressor for CAT221/CAT430/CPC300; order no. 51511868
- Sample pump on request

9 Trouble-shooting

9.1 Trouble-shooting instructions

Although the sample conditioning unit is not very prone to faults due to its simple construction, problems can, of course, not be completely ruled out.
In the following table you can find, therefore, possible faults, their causes and possible corrective measures.

Fault	Possible cause	Tests and / or corrective measures
No sample	No inlet, pump off	▪ Switch pump on ▪ Open inlet valve
No or too little sample	Siphon effect in the outlet, wedge wire sieve soiled	▪ Clear the drain ▪ Clean wedge wire sieve ▪ Shorten rinsing interval

9.2 Spare parts

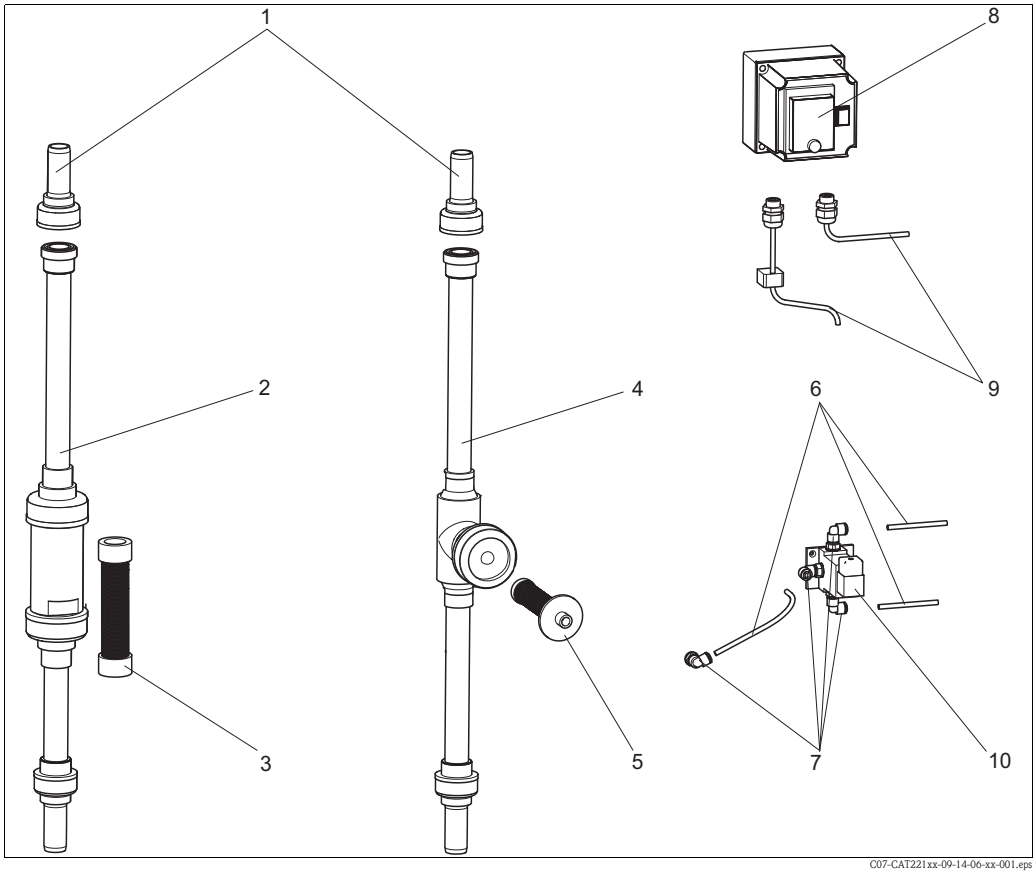

Fig. 10: CAT221: all versions (without housing resp. mounting plate)

Please, find the order codes from the following table according to the position numbers in → 10.

Pos.	Spare part	order no.
1	Hose nozzle Ø30 mm (1.18")	on request
2	Inlet pipe	on request
3	Wedge wire sieves for inlet version ▪ 50 µm ▪ 100 µm ▪ 200 µm	 51516031 51516033 51516035
4	Outlet pipe	on request
5	Wedge wire sieves for outlet version ▪ 50 µm ▪ 100 µm ▪ 200 µm	 51516032 51516034 51516036
6	Hose set (ID4, AD6)	51516042
7	Connector set	51516041
8, 9	Control unit and electric cables	on request
10	Kit 3-way valves ▪ 230 V ▪ 115 V ▪ 24 V DC	 51516028 51516029 51516030

9.3 Return

If the device requires repair, please send it *cleaned* to the sales centre responsible. Please use the original packaging, if possible.

Please enclose the completed "Declaration of contamination" (copy the second last page of these Operating Instructions) with the packaging and the transportation documents.
No repair without completed "Declaration of contamination"!

9.4 Disposal

The device contains electronic components and must therefore be disposed of in accordance with regulations on the disposal of electronic waste.
Please observe local regulations.

10 Technical data

10.1 Power supply

Supply voltage	Depending on version: ■ 230 V AC, 50 Hz, approx. 60 VA ■ 115 V AC, 60 Hz ■ 24 V DC
Fuses	Depending on version: ■ 230 V AC: 0.5 A, time-lag ■ 115 V AC: 1.0 A, time-lag ■ 24 V DC: 2.0 A, time-lag

10.2 Performance characteristics

Filtrate volume	minimum 10.0 l/h
Separation performance	Separation of particles, colloids and materials with high molecular weight Max. particle size depending on the used wedge wire sieve: ■ 50 µm (for analysers) ■ 100 resp. 200 µm (for SAC or TOC)
Life time	Approx. 1 to 2 years, even longer with appropriate care
Cleaning interval	Depending on application and soiling degree: ■ inlet: approx. 2 to 4 weeks ■ outlet: approx. 2 to 6 months
Chemical resistance	pH 3 to 14
Rinsing interval	1 to 90 minutes
Rinse air	2 to 4 bar (29 to 58 psi)

10.3 Environment

Ambient temperature range	0 to 50 °C (32 to 122 °F)
Ingress protection	IP 54

10.4 Process

Sample temperature	5 to 40 °C (41 to 104 °F)
Sample overpressure	0.2 to 4.0 bar (2.9 to 58 psi) at max. 40 °C (104 °F)
Sample capacity	1 to 2.5 m^3/h

10.5 Mechanical construction

Design, Dimensions	see chapter "Installation conditions"	
Weight	Open version: Housing version:	7 kg (15.4 lb) 14 kg (30.9 lb)
Materials	Mounting plate, pipe: Control unit housing: Wedge wire sieve: Housing:	PVC polystyrene/polycarbonate SS 1.4435 (AISI 316L) GFK (glass-fibre reinforced plastic)
Filter elements	▪ 50 µm ▪ 100 µm ▪ 200 µm	
Rinse connection	4/6 mm (0.16 / 0.24")	
Process connection	▪ Hose nozzle Ø30 mm (1.18") or ▪ PVC adhesive threaded joint ID 32 mm (1.26")	
Connection to analyser	4/6 mm (0.16 / 0.24")	
Cable entry	M20	

Index

A
Accessories 19

C
Certificates 7
Checking
  Connection 13
  Function 17
  Installation 12
Cleaning
  Cleaning agents 18
  Wedge wire sieve 18
Commissioning 4, 17

D
Declaration of conformity 7
Designated use 4
Device description 8
Dimensions
  Housing version 11
  Open inlet version 9
  Open outlet version 10
Display 14
Disposal 21

E
Electrical connection 13
Environment 22
Errors 20

F
Filtrate hose 18

H
Hebereffekt 12
Housing version 11

I
Incoming acceptance 8
Installation 4, 8–9, 12

M
Maintenance 18
Mechanical construction 22
Mode 15

N
Nameplate 6

O
Open inlet version 9
Open outlet version 10
Operation 4, 14–15
Operational safety 4
Ordering information 6
Overview 8

P
Performance characteristics 22
Power supply 22
Process 22
Product structure 6

R
Replacing
  Filtrate hose 18
Return 4, 21
Rinsing interval 15
Rinsing time 15

S
Safety messages 5
Scope of delivery 7
Spare parts 20
Spüldauer 16
Spülintervall 16
Storage 8
Switch-on 17

T
Technical data 22
Timer setting 15
Transport 8

U
Use 4

W
Wedge wire sieve 18

Endress+Hauser

People for Process Automation

Declaration of Hazardous Material and De-Contamination

Erklärung zur Kontamination und Reinigung

RA No. ☐☐☐☐☐☐☐☐

Please reference the Return Authorization Number (RA#), obtained from Endress+Hauser, on all paperwork and mark the RA# clearly on the outside of the box. If this procedure is not followed, it may result in the refusal of the package at our facility.
Bitte geben Sie die von E+H mitgeteilte Rücklieferungsnummer (RA#) auf allen Lieferpapieren an und vermerken Sie diese auch außen auf der Verpackung. Nichtbeachtung dieser Anweisung führt zur Ablehnung ihrer Lieferung.

Because of legal regulations and for the safety of our employees and operating equipment, we need the "Declaration of Hazardous Material and De-Contamination", with your signature, before your order can be handled. Please make absolutely sure to attach it to the outside of the packaging.
Aufgrund der gesetzlichen Vorschriften und zum Schutz unserer Mitarbeiter und Betriebseinrichtungen, benötigen wir die unterschriebene "Erklärung zur Kontamination und Reinigung", bevor Ihr Auftrag bearbeitet werden kann. Bringen Sie diese unbedingt außen an der Verpackung an.

Type of instrument / sensor
Geräte-/Sensortyp _____

Serial number
Seriennummer _____

☐ Used as SIL device in a Safety Instrumented System / *Einsatz als SIL Gerät in Schutzeinrichtungen*

Process data/ *Prozessdaten*

Temperature / *Temperatur* _____ [°F] _____ [°C]
Conductivity / *Leitfähigkeit* _____ [µS/cm]
Pressure / *Druck* _____ [psi] _____ [Pa]
Viscosity / *Viskosität* _____ [cp] _____ [mm²/s]

Medium and warnings
Warnhinweise zum Medium

	Medium /concentration *Medium /Konzentration*	Identification CAS No.	flammable *entzündlich*	toxic *giftig*	corrosive *ätzend*	harmful/ irritant *gesundheits-schädlich/ reizend*	other * *sonstiges**	harmless *unbedenklich*
Process medium / *Medium im Prozess*								
Medium for process cleaning / *Medium zur Prozessreinigung*								
Returned part cleaned with / *Medium zur Endreinigung*								

* explosive; oxidising; dangerous for the environment; biological risk; radioactive
* *explosiv; brandfördernd; umweltgefährlich; biogefährlich; radioaktiv*

Please tick should one of the above be applicable, include safety data sheet and, if necessary, special handling instructions.
Zutreffendes ankreuzen; trifft einer der Warnhinweise zu, Sicherheitsdatenblatt und ggf. spezielle Handhabungsvorschriften beilegen.

Description of failure / *Fehlerbeschreibung* _____

Company data / *Angaben zum Absender*

Company / *Firma* _____

Address / *Adresse* _____

Phone number of contact person / *Telefon-Nr. Ansprechpartner:* _____

Fax / E-Mail _____

Your order No. / *Ihre Auftragsnr.* _____

"We hereby certify that this declaration is filled out truthfully and completely to the best of our knowledge.We further certify that the returned parts have been carefully cleaned. To the best of our knowledge they are free of any residues in dangerous quantities."
"Wir bestätigen, die vorliegende Erklärung nach unserem besten Wissen wahrheitsgetreu und vollständig ausgefüllt zu haben. Wir bestätigen weiter, dass die zurückgesandten Teile sorgfältig gereinigt wurden und nach unserem besten Wissen frei von Rückständen in gefahrbringender Menge sind."

(place, date / *Ort, Datum)*

Name, dept./*Abt.* (please print / *bitte Druckschrift*)

Signature / *Unterschrift*

P/SF/Kont a X IV

www.endress.com/worldwide

Endress+Hauser

People for Process Automation

BA384C/07/EN/06.10
FM9

71116048