Level Pressure Flow Temperature Liquid Analysis Registration Systems Components Services Solutions

Operating Instructions

Stamolys CA71CL

Analyzer for Photometric Determination of Free Available and Total Chlorine

BA354C/07/en/10.06
51512312

Valid as of:
Software version 5.9

Endress+Hauser

People for Process Automation

Brief overview

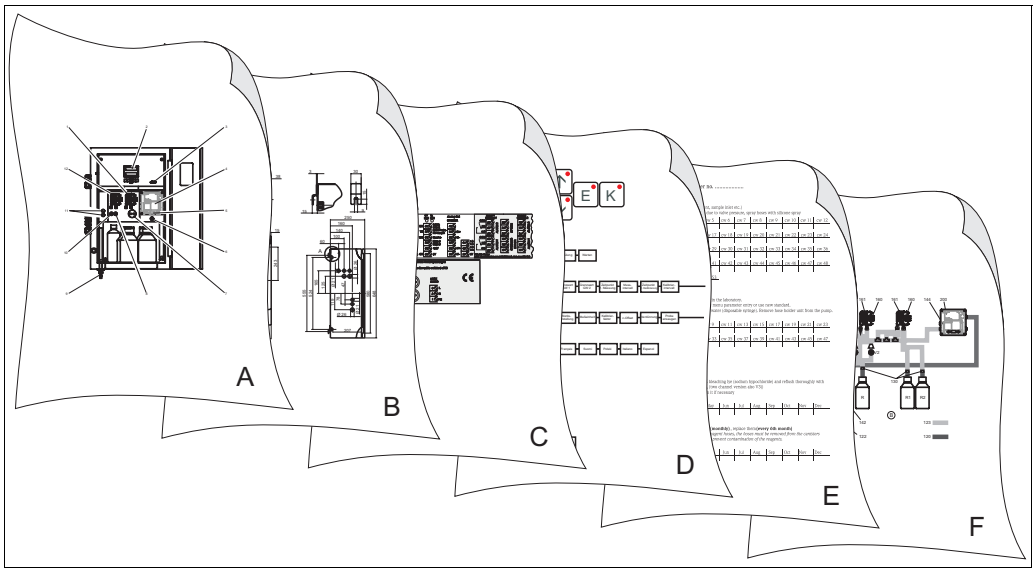

a0006651

	A
→ 🖹 8	Overview of analyzer: most important modules
	▼
	B
→ 🖹 9	Dimensions, installation conditions
→ 🖹 14	Installation instructions and installation examples
	▼
	C
→ 🖹 15	Terminal assignment
→ 🖹 18	Signals, switching contacts
	▼
	D
→ 🖹 24	Operation: configuration
→ 🖹 29	Calibration
→ 🖹 50	Operating matrix
→ 🖹 31	Commissioning
	▼
	E
→ 🖹 35, → 🖹 58	Maintenance schedule
→ 🖹 36	Replacing consumables and wear parts
→ 🖹 41, → 🖹 54	Accessories
	▼
	F
→ 🖹 43	Troubleshooting
→ 🖹 45, → 🖹 54	Spare parts
	▼
→ 🖹 48	**Technical data**

Table of contents

1 Safety instructions 4

1.1 Designated use 4
1.2 Installation, commissioning and operation 4
1.3 Operational safety 4
1.4 Return 4
1.5 Notes on safety icons and icons 5

2 Identification 6

2.1 Device designation 6
2.2 Scope of delivery 7
2.3 Certificates and approvals 7

3 Installation 8

3.1 The analyzer at a glance 8
3.2 Incoming acceptance, transport, storage 9
3.3 Installation conditions 9
3.4 Installation instructions 12
3.5 Installation examples 14
3.6 Post-installation check 14

4 Wiring 15

4.1 Electrical connection 15
4.2 Signal connections 18
4.3 Switching contacts 19
4.4 Serial interface 20
4.5 Post-connection check 21

5 Operation 22

5.1 Display and operating elements 22
5.2 Local operation 22
5.3 Calibration 29

6 Commissioning. 31

6.1 Function check 31
6.2 Switching on 31

7 Maintenance. 35

7.1 Maintenance schedule 35
7.2 Replacing reagents 36
7.3 Replacing pump hoses 36
7.4 Replacing valve hoses 38
7.5 Replacing the static mixer 39
7.6 Replacing the photometer cell 39
7.7 Cleaning 40
7.8 Placing out of service 40

8 Accessories. 41

8.1 Collecting vessel 41
8.2 Reagents, cleaners, standard solutions 41
8.3 Maintenance kit 41
8.4 Hose cleaner 41
8.5 Dilution module 41
8.6 Additional accessories 42

9 Troubleshooting 43

9.1 Troubleshooting instructions 43
9.2 Spare parts 45
9.3 Software history 46
9.4 Return 47
9.5 Disposal 47

10 Technical data 48

10.1 Input 48
10.2 Output 48
10.3 Power supply 48
10.4 Performance characteristics 48
10.5 Environment 49
10.6 Process 49
10.7 Mechanical construction 49

11 Appendix. 50

11.1 Operating matrix 50
11.2 Ordering forms 54
11.3 Analyzer settings 56
11.4 Maintenance schedule 58

Index 61

1 Safety instructions

1.1 Designated use

The analyzer is a compact photometric analytical system.
It is designed for monitoring free available or total chlorine in water.

CA71 is particularly suitable for the following applications:
- Drinking water treatment
- Monitoring wastewater outlets
- Monitoring swimming pool water
- Process water treatment

Any use other than that described here compromises the safety of persons and the entire measuring system and is, therefore, not permitted.
The manufacturer is not liable for damage caused by improper or non-designated use.

1.2 Installation, commissioning and operation

Please note the following:
- Installation, commissioning, operation and maintenance of the measuring system must only be carried out by trained technical personnel.
  The technical personnel must be authorized to perform such tasks by the owner-operator.
- The electrical connection may only be established by authorized electrical technicians.
- Technical personnel must have read and understood these Operating Instructions and must follow the instructions they contain.
- Before commissioning the entire measuring point, check that all the connections are correct. Ensure that electrical cables and hose connections are not damaged.
- Do not operate damaged products and secure them against unintentional commissioning. Mark the damaged product as defective.
- Faults at the measuring point may only be rectified by authorized and specially trained personnel.
- If faults cannot be rectified, the products must be taken out of service and secured against unintentional commissioning.
- Repairs not described in these Operating Instructions may only be carried out directly at the manufacturer's or by the service organization.

1.3 Operational safety

The analyzer has been designed to state-of-the-art technology, has been tested and left the factory in a condition in which it is safe to operate.
Relevant regulations and European standards have been met.

As the user, you are responsible for complying with the following safety regulations:
- Installation instructions
- Local prevailing standards and regulations

1.4 Return

If the analyzer requires repair, please send it *cleaned* to your sales center.
Please use the original packaging when returning the device.

Please enclose the completed "Declaration of Contamination and Cleaning" form (copy the second last page of these Operating Instructions) with the packaging and also the shipping documents. The unit cannot be repaired if this declaration is not duly completed!

1.5 Notes on safety icons and icons

Warning!
This symbol alerts you to hazards. They could cause serious injuries as well as damage to the instrument if ignored.

Caution!
This symbol alerts you to possible faults which could arise from incorrect operation. They could cause damage to the instrument if ignored.

Note!
This symbol indicates important items of information.

2 Identification

2.1 Device designation

2.1.1 Nameplate

Compare the order code on the nameplate (on the analyzer) to the product structure and your order.

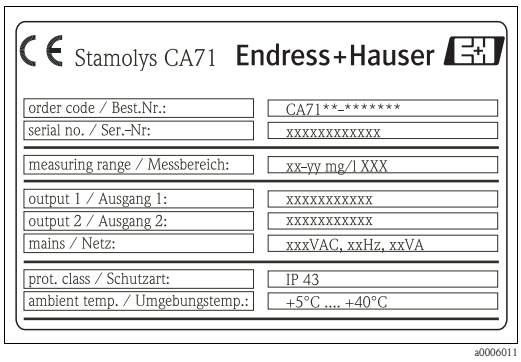

You can read the following information from the nameplate:
- Order code (device version)
- Serial number
- Measuring range
- Outputs and communication
- Power supply
- Degree of protection
- (Permitted) ambient temperature

Fig. 1: Nameplate

2.1.2 Product structure

	Measuring range							
	A	0.01 to 1.00 mg/l free available chlorine						
	B	0.01 to 1.00 mg/l total chlorine						
	C	0.10 to 10.00 mg/l free available chlorine						
	D	0.10 to 10.00 mg/l total chlorine						
	Y	Special version as per customer specifications						
		Sample transfer						
		1	From one measuring point (one-channel version)					
		2	From two measuring points (two-channel version)					
			Power supply					
			0	230 V AC / 50 Hz				
			1	115 V AC / 60 Hz				
			2	115 V AC / 50 Hz				
			3	230 V AC / 60 Hz				
				Collecting vessel (for up to 3 analyzers)				
				A	Without collecting vessel			
				B	Collecting vessel without level monitoring			
				C	Collecting vessel with level monitoring (one-channel version only)			
				D	Two collecting vessels without level monitoring (two-channel version)			
					Housing			
					1	Open design		
					2	GFR		
					3	Stainless steel (1.4301 / AISI 304) + vent.		
					8	Stainless steel (1.4301 / AISI 304) without vent.		
						Output		
						A	0/4 to 20 mA, RS 232	
						B	Profibus DP	
							Reagents	
							1	To be ordered separately
							2	One set inactive
							3	Three sets inactive
CA71CL-								**complete order code**

2.2 Scope of delivery

Note!
Reagents must be ordered separately for version CA71XX-XXXXXX1.
Inactive reagents form part of the scope of delivery for all other versions. They must be mixed before use. Please refer to the guidelines enclosed for this purpose.

The scope of delivery comprises:
- 1 analyzer with power supply plug
- 1 cleaning injector
- 1 can of silicone spray
- 1 Noprene hose, length 2.5 m (8.2 ft), ID 1.6 mm (0.06 inch)
- 1 C-Flex hose, length 2.5 m (8.2 ft), ID 6.4 mm (0.25 inch)
- 1 C-Flex hose, length 2.5 m (8.2 ft), ID 3.2 mm (0.13 inch)
- 2 hose connectors of each:
  - 1.6 mm x 1.6 mm (0.06 inch x 0.06 inch)
  - 1.6 mm x 3.2 mm (0.06 inch x 0.13 inch)
  - 6.4 mm x 3.2 mm (0.25 inch x 0.13 inch)
- 2 T-hose connectors of each:
  - 1.6 mm x 1.6 mm x 1.6 mm (0.06 inch x 0.06 inch x 0.06 inch)
  - 3.2 mm x 3.2 mm x 3.2 mm (0.13 inch x 0.13 inch x 0.13 inch)
- 1 interference suppressor for the current output
- 4 edge covers (with GFR housing only)
- 1 roll of Teflon tape
- 1 quality certificate
- 1 set of Operating Instructions (English)

2.3 Certificates and approvals

2.3.1 CE mark

Declaration of conformity
The product meets the legal requirements of the harmonized European standards. The manufacturer confirms compliance with the standards by affixing the CE mark.

2.3.2 Manufacturer's certificate

Quality certificate
With this certificate, the manufacturer confirms that all technical regulations are met and specified tests have been carried out individually for your product.

3 Installation

3.1 The analyzer at a glance

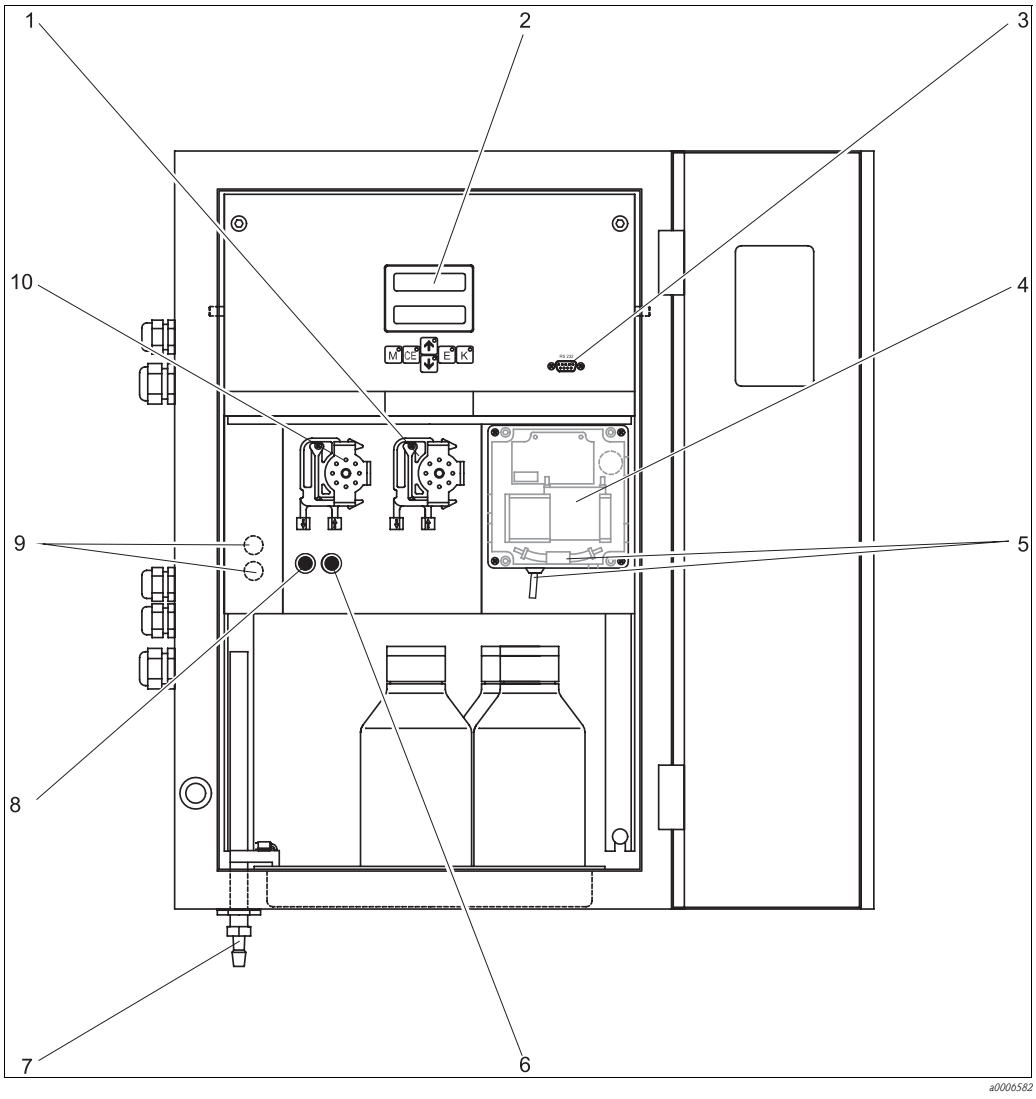

Fig. 2: Analyzer (cabinet version, without hoses)

1	*Reagent pump (P2), supply from canister*	*6*	*Valve V2*
2	*Display*	*7*	*Outlet for sample or reagent mixture*
3	*Serial interface RS 232*	*8*	*Valve V1*
4	*Photometer cell*	*9*	*Channel switchover: top channel 1, bottom channel 2*[1)]
5	*Static mixer*	*10*	*Sample pump P1, supply see below*

1) Only for two-channel version

Supply to sample pump:
- Valve V1
  - Hose at front: sample supply
  - Hose at rear: supply from valve V2 (cleaner or standard)
- Valve V2
  - Hose at front: supply from canister with standard
  - Hose at rear: supply from canister with cleaner

3.2 Incoming acceptance, transport, storage

- Make sure the packaging is undamaged!
  Inform the supplier about damage to the packaging.
  Keep the damaged packaging until the matter has been settled.
- Make sure the contents are undamaged!
  Inform the supplier about damage to the delivery contents.
  Keep the damaged products until the matter has been settled.
- Check that the scope of delivery is complete and matches your order and the shipping documents.
- Pack the device in such a way as to protect it reliably against impact and moisture for storage and transportation. The original packaging provides optimum protection. In addition, the permitted ambient conditions must be observed (see "Technical data").
- If you have any queries, please contact your supplier or your sales center.

3.3 Installation conditions

3.3.1 Design, dimensions

Version with stainless steel housing

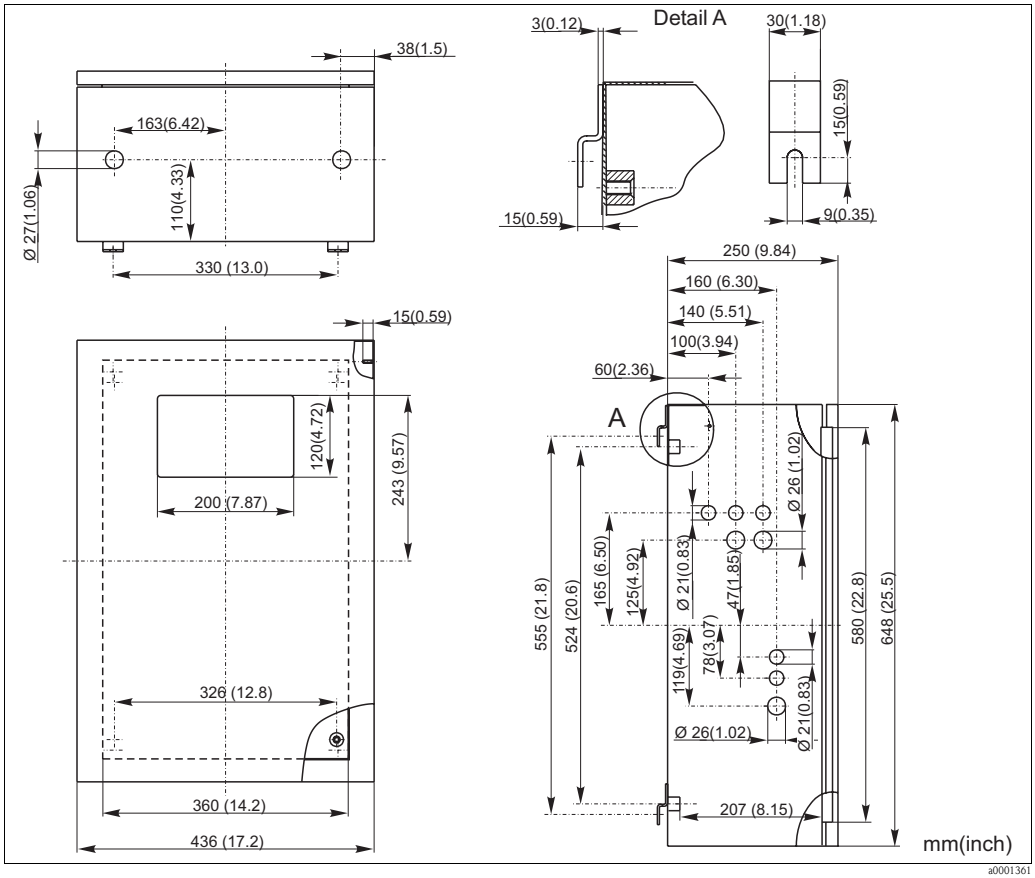

Fig. 3: Stainless steel version

Version with GFR housing

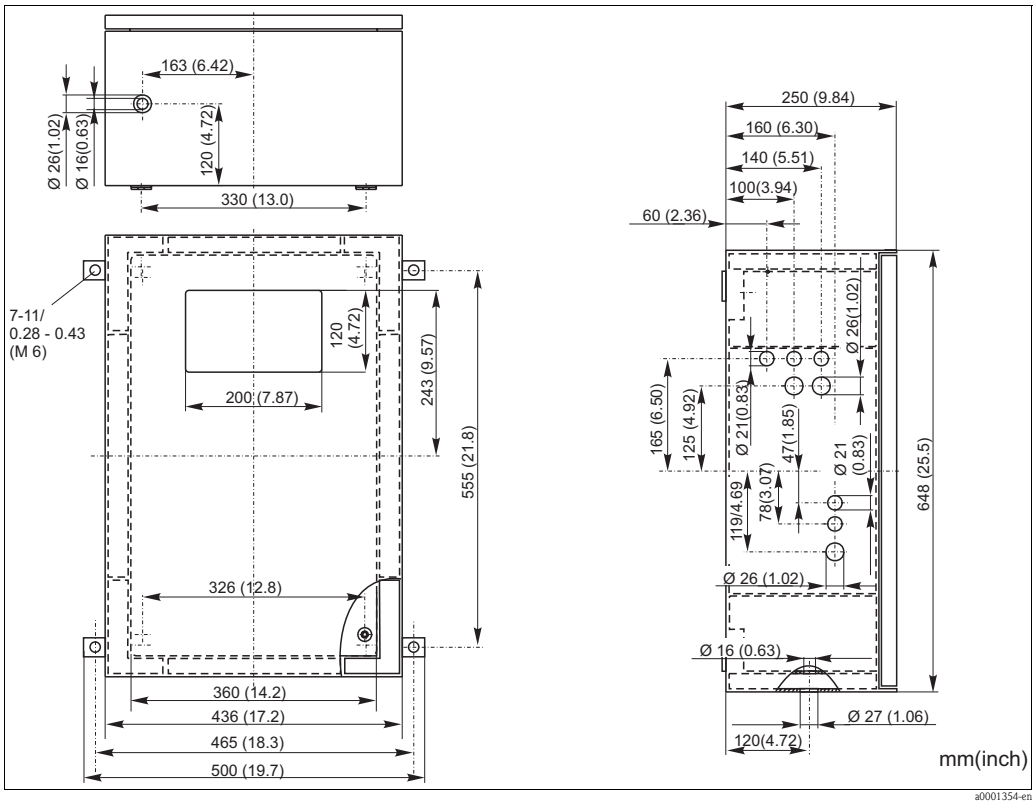

Fig. 4: GFR version

Open version

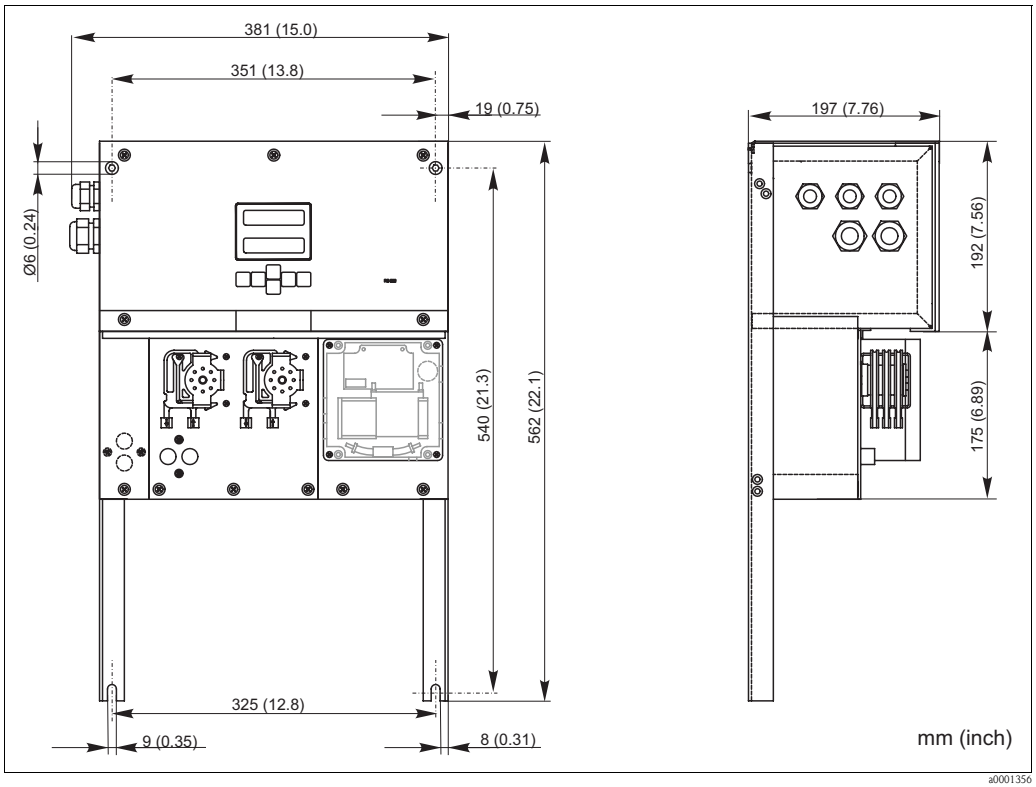

Fig. 5: Version without housing (open design)

Note!
For the reagents, you need an additional base at max. 35 cm (13.8 inch) under the pumps in the open version. The dimensions of the reagent bottles are as follows: 90 x 90 x 215 mm (3.54 x 3.54 x 8.46 inch). Depending on the version, the number of bottles varies between 2 and 5.
Furthermore, in these versions the outlet pipe has to be installed to the right beside the analyzer. Please refer to the sheet enclosed with the Operating Instructions.
The outlet pipe must be secured to a wall in such a way that the incline of the outlet pipes from the photometer is between 5 and 10 % . You must extend the outlet pipes where necessary.

3.3.2 Connecting the sample line

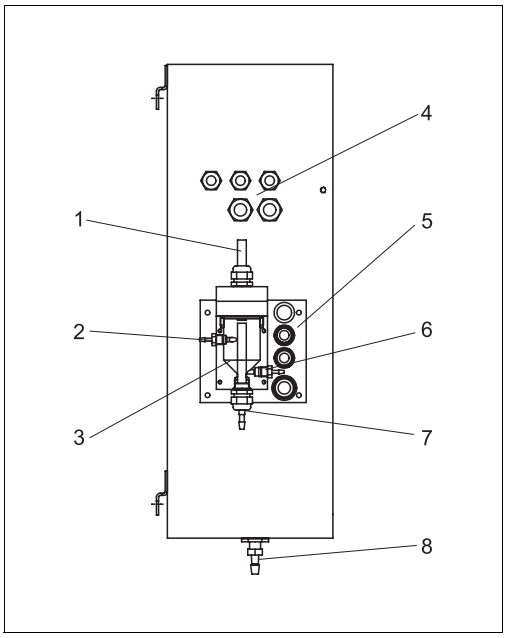

Fig. 6: Collecting vessel at side wall (optional)

1 Ventilation
2 Sample supply from sample conditioning
3 Collecting vessel
4 Electrical connections
5 Analyzer sample inlet

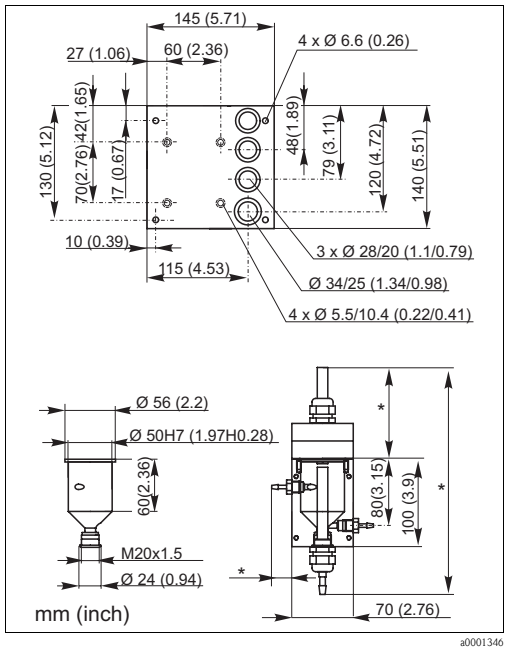

Fig. 7: Dimensions of collecting vessel and base plate

** * Dimensions variable, as freely adjustable*
6 Sampling for analyzer
7 Sample overflow
8 Analyzer outlet

One-channel version

Collecting vessel (at analyzer outer side, with and without level monitoring)

Connection	Hose ID 3.2 mm (0.13")

Customer collecting vessel

Connection	Hose ID 1.6 mm (0.06")
Max. distance from collecting vessel to analyzer	1 m (3.28 ft)
Max. height difference from collecting vessel to analyzer	0.5 m (1.64 ft)

Two-channel version

- One or two collecting vessels (with or without level monitoring) form part of the scope of delivery, depending on the version.
- In the two-channel version, level monitoring is only possible for one channel.
- One collecting vessel can be mounted on the housing. A second vessel would have to be made available near the device.

Adjusting the level monitoring

You have to adjust conductive level monitoring depending on whether you want to connect one, two or three analyzers to this single collecting vessel.

1. Depending on the application, mount the right adjusting pin (→ 8, → 9, item 2) or do not use any adjusting pin.
2. Pull the marked pipe (item 3) downwards in accordance with your application (1, 2 or 3 analyzers) to set an optimum collecting volume.

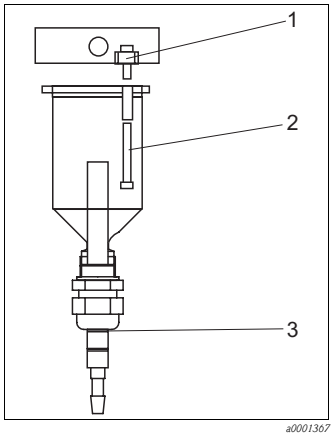

Fig. 8: One analyzer

1 M 3x12
2 M 3x35 (adjusting pin)
3 Marking 1

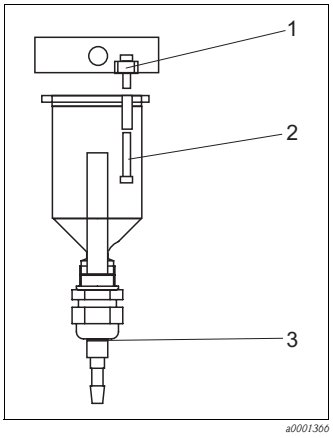

Fig. 9: Two analyzers

1 M 3x12
2 M 3x20 (adjusting pin)
3 Marking 2

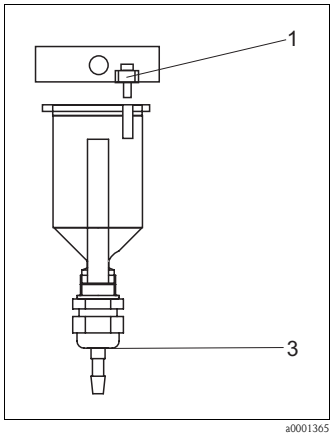

Fig. 10: Three analyzers

1 M 3x12
3 Marking 3

3.4 Installation instructions

To install the analyzer at the intended location, proceed as follows:

1. Mount the analyzer and secure it to a wall using screws (Ø6 mm / 0.24").
   For the installation dimensions, please see the previous chapter.
2. Using a spirit level, check that the cabinet is hanging or standing straight. Only in this way can any air bubbles present escape from the cell.
3. Fit the edge covers (with GFR housing only).
4. Lay the drain pipe for the reaction products. Where possible, use solid pipes (PVC or PE, internal diameter 1" with 3% incline).
5. Insert the valve hoses accordingly. These were partly removed from the valves for transportation. This prevents the hoses from sticking or pressure being applied to a point in the hose over an extended period.
   → 11

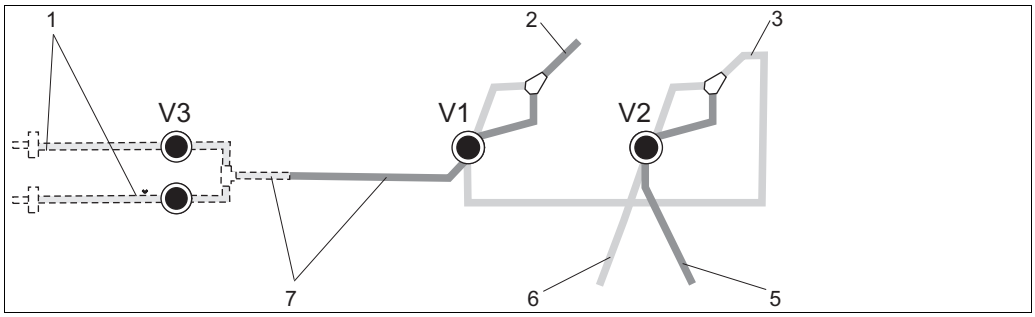

Fig. 11: Valves and valve hoses

V1-2 Valves
1 Channel switchover
2 To sample pump
3 Connecting hose to valve 1, at rear
4 Outlet hose
5 Hose, valve 2 at front, standard
6 Hose, valve 2 at rear, cleaner
7 Hose, valve 1 at front, sample

6. Secure the hose boxes in the appropriate pump holders (→ 12):
Sample pump left, reagent pump right. The direction of flow of the sample and reagent must be counterclockwise.

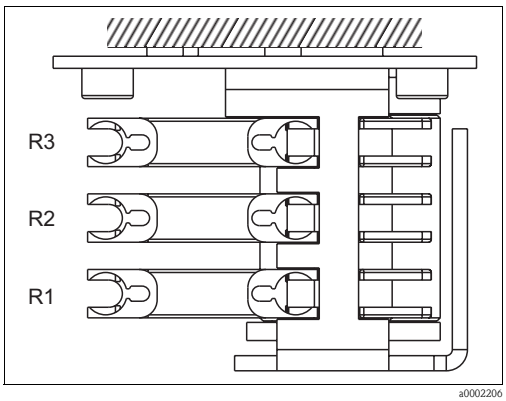

Fig. 12: Reagent pump, top view

R1 Reagent 1
R2 Reagent 2 (if present)
R3 Reagent 3 (if present)

7. Connect the sample supply.

Note!
The sample can be obtained as follows:
– Directly or via a reversible flow filter or a cross-flow filter by means of a small pump (rating approx. 300 ml/min), suitable for clear media, e.g. in the outlet of a sewage treatment plant
– From microfiltration; this is practical for media containing flocculants, e.g. in an activated sludge basin
– Sample conditioning using ultrafiltration for contaminated media, e.g. from the primary settling tank.

For questions regarding sample conditioning and its automation, please contact Service or the sales center responsible for your region.

8. Connect the tubes from canisters containing reagents, standards and cleaning agents to the following nozzles:

Canister	Tube designation (mark)
Sample	P
Reagent 1	CL-1
Reagent 2	CL-2
Cleaner	R

3.5 Installation examples

3.5.1 CAT 430 or ultrafiltration provided by customer and two CA 71 units

- Permeate can contain air bubbles (CAT430) or is free of bubbles (ultrafiltration provided by customer)
- Distance between the analyzers as short as possible: sample line between T-section and second analyzer (, → 13, item 2) shorter than 1.5 m
- Cross-section of sample line ID 3.2 - 4 mm
- Only one collecting vessel required

✎ Note!
Make sure sufficient sample is always available for both analyzers. Bear this in mind when selecting maintenance intervals for CAT430 and when setting the buffer volume at the collecting vessel.

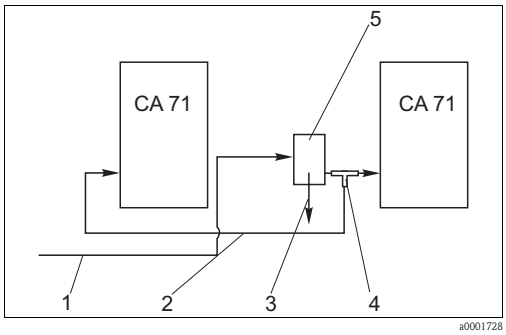

Fig. 13: Installation example

1 Sample from CAT430
2 Sample line
3 Collecting vessel overflow
4 T-section
5 Collecting vessel

3.5.2 CAT 411, CAT 430 and two CA 71 units (two-channel version)

- Permeate can contain air bubbles (are removed by the sample collector)
- Distance between the analyzers as short as possible: sample line between T-section and second analyzer (, → 14, item 3) shorter than 1.5 m
- Cross-section of sample line ID 3.2 - 4 mm
- One collecting vessel each **(without level monitoring)** for CAT411 or CAT430

✎ Note!
Make sure sufficient sample is always available for both analyzers. Bear this in mind when selecting maintenance intervals for CAT 411 and CAT 430.

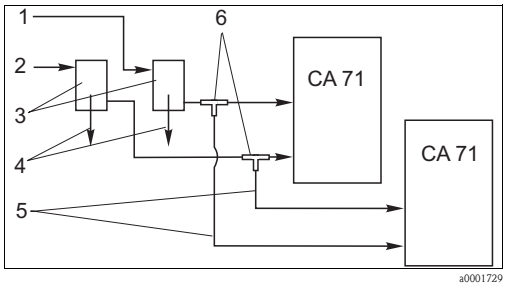

Fig. 14: Installation example

1 Sample from CAT430
2 Sample from CAT411
3 Collecting vessels
4 Collecting vessel overflow
5 Sample lines
6 T-sections

3.6 Post-installation check

- After installation, check that all connections are secure and leaktight.
- Ensure that the hoses cannot be removed without effort.
- Check all hoses for damage.

4 Wiring

4.1 Electrical connection

Warning!
- The electrical connection may only be established by an electrical technician.
- The electrical technician must have read and understood these Operating Instructions and must follow the instructions they contain.
- **Before beginning** the connection work, ensure that no voltage is applied to the cables.

4.1.1 Quick wiring guide

Caution!
- You have to fold out the frame of the analyzer to reach the terminal block.
- Beforehand, release the hoses from the outlet pipe. Otherwise there is a danger of flooding.
- Connect the hoses again after folding the frame back in.

Fold out the frame as follows:

1. Release the two bottom Allen screws (AF 6) by 3-4 rotations (→ 15, item 1).
2. Unscrew the two upper Allen screws completely so that the frame folds out. In this way, you reach the terminal block (item 2).

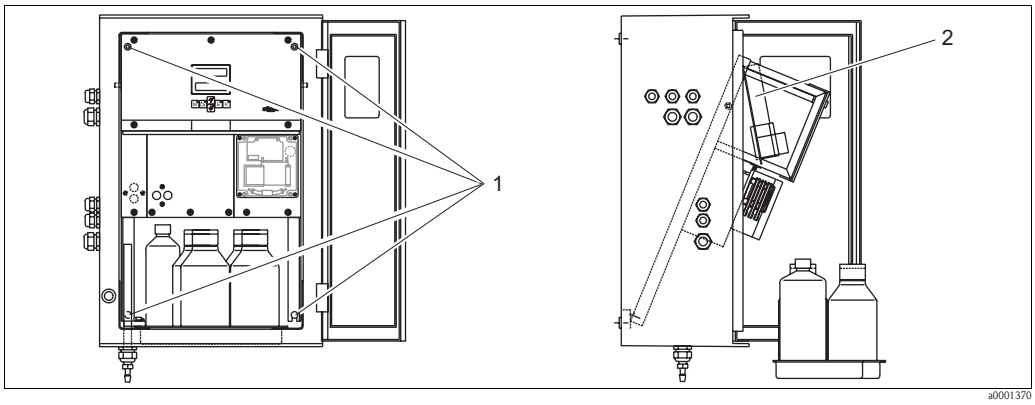

Fig. 15: Folding out the frame

1 Allen screws AF 6
2 Terminal block

Note!
The device does not have a power supply switch. Therefore, it is advantageous to have a fused socket near the device.

4.1.2 Terminal assignment

Caution!
The following diagram shows an example of the connection compartment sticker (→ 16). The terminal assignment and cable colors can deviate from the actual assignment and colors!
Only use the terminal assignment of the stick-on label **in the device** (→ 17) to connect your analyzer!

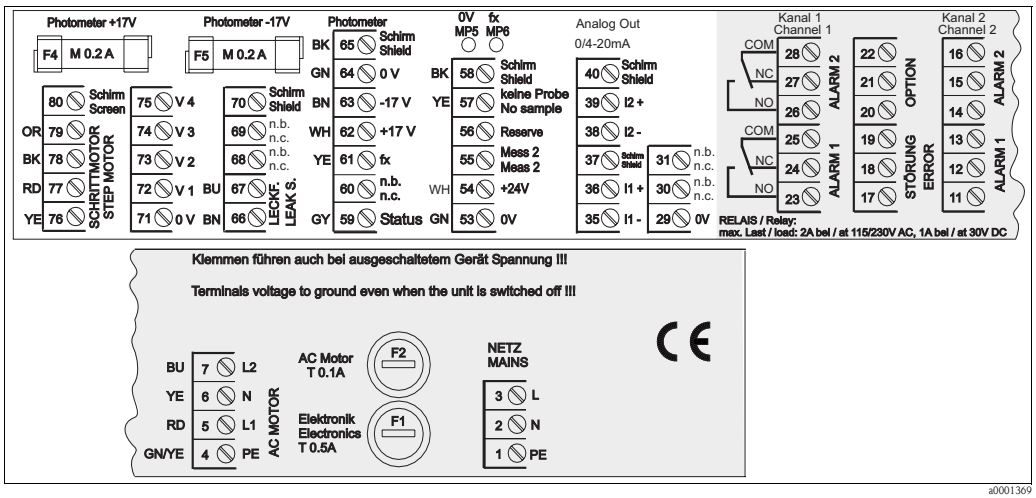

Fig. 16: Example of connection stick-on label

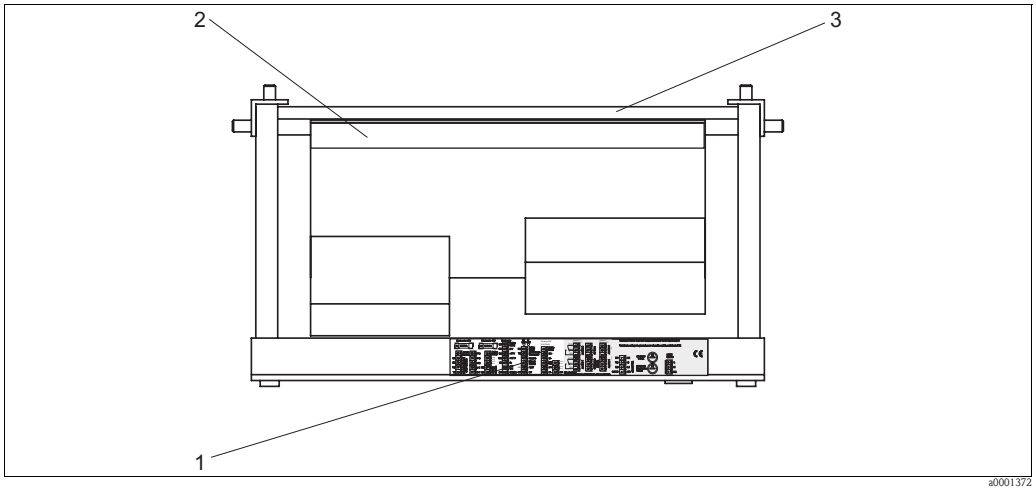

Fig. 17: Analyzer from above (open/folded out)

1 Connection compartment sticker
2 Board with terminal block
3 Rear of analyzer

Function	Designation	Terminal One-channel version	Terminal Two-channel version
Mains	L	3	3
	N	2	2
	PE[1)]	1	1
Alarm value 1, channel 1	COM	25	25
	NC	24	24
	NO	23	23
Alarm value 2, channel 1	COM	28	28
	NC	27	27
	NO	26	26
Alarm value 1, channel 2	COM	–	13
	NC	–	12
	NO	–	11
Alarm value 2, channel 2	COM	–	16
	NC	–	15
	NO	–	14
Fault	COM	19	19
	NC	18	18
	NO	17	17
Unassigned	COM	22	22
	NC	21	21
	NO	20	20
Analog output 1 0/4 to 20 mA	+	36	36
	–	35	35
	Shield	37	37
Analog output 2 0/4 to 20 mA	+	–	39
	–	–	38
	Shield	–	40
Sample conditioning remote control	Input	57	57
	0 V	53	53
Channel switchover	Input	–	55
	0 V	–	53

1) Brass screw with bolt at top right in the connection compartment (marked with ⏚)

Note!

- Alarm values 1 and 2 do not need to be connected if the process control system sets its own alarm values at the analog output.
- When using a sample conditioning system: connect terminals 57 and 53 on CA 71 to the corresponding terminals of the sample conditioning system. For the allocation of these terminals, please see the Operating Instructions of the sample conditioning system.
- If there is a 24 V voltage at terminal 57, the analyzer will not begin measurement (sample not ready). To start measurement, the voltage must stay at 0 V for at least 5 seconds.

4.2 Signal connections

4.2.1 Shielding of the analog outputs

The interference suppressor dampens interference from electromagnetic effects on control, power and signal lines.
After connecting the data transfer cables, clip the interference suppressor (in scope of delivery) onto the cable cores (not onto the outer insulation of the cable!). You have to route the cable screen outside around the interference suppressor and connect it to PE (brass screw with bolt) at the top right in the connection compartment (→ 18).

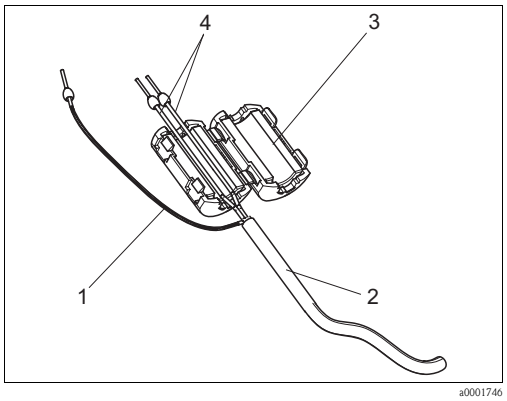

Fig. 18: Interference protection of the signal cable

1 Cable shield (at PE in connection compartment!)
2 Signal cable
3 Interference suppressor
4 Cable cores of the signal cable

Note!
With the two-channel version (data cables at analog output 1 and analog output 2), route the cable cores of the two data cables through the interference suppressor.

4.2.2 One-channel version

Connection	Designation	Function
Signal inputs	Leak	Liquid has collected in the drip pan
	No sample	No sample available, measurement is not started, display flashes
Signal outputs	AV 1	Alarm value 1 exceeded or undershot
	AV 2	Alarm value 2 exceeded or undershot
	Fault	Error message, can be retrieved using operation menu
	Measurement end	Displays "Measurement finished" (5 s)
Analog output	I-1 channel 1	0 or 4 mA = start of measuring range 20 mA = end of measuring range

4.2.3 Two-channel version

Connection	Designation	Function
Signal inputs	Leak	Liquid has collected in the drip pan
	No sample	No sample available, measurement is not started, display flashes
Signal outputs	AV 1 - 1	Alarm value 1, channel 1 exceeded or undershot
	AV 2 - 1	Alarm value 2, channel 1 exceeded or undershot
	AV 1 - 2	Alarm value 1, channel 2 exceeded or undershot
	AV 2 - 2	Alarm value 2, channel 2 exceeded or undershot
	Fault	Error message, can be retrieved using operation menu
	Channel 1/2 or measuring end[1)]	Displays active channel Displays "Measurement finished" (5 s)
Analog output	I-1 channel 1	0 or 4 mA = start of measuring range 20 mA = end of measuring range
	I-2 channel 2	0 or 4 mA = start of measuring range 20 mA = end of measuring range
Channel selection	Meas. 2	0 V = channel 1 24 V = channel 2

1) Can be selected alternatively

4.3 Switching contacts

One-channel version

	Terminal connection for condition met	Terminal connection for condition not met	Terminal connection for power off
AV 1	A: R: 2525 — 2324	A: 25 - 24 R: 25 - 23	25 - 24
AV 2	A: R: 2828 — 2627	A: 28 - 27 R: 28 - 26	28 - 27
Fault	A: R: 1919 — 1718	A: 19 - 18 R: 19 - 17	19 - 18
Unassigned	2216 — 2014 13 11	22 - 21 16 - 15 13 - 12	22 - 21 16 - 15 13 - 12

Two-channel version

	Terminal connection for condition fulfilled	Terminal connection for condition not fulfilled	Terminal connection for power off
AV 1 - 1	A: 25 - 23 R: 25 - 24	A: 25 - 24 R: 25 - 23	25 - 24
AV 1 - 2	A: 13 - 11 R: 13 - 12	A: 13 - 12 R: 13 - 11	13 - 12
AV 2 - 1	A: 28 - 26 R: 28 - 27	A: 28 - 27 R: 28 - 26	28 - 27
AV 2 - 2	A: 16 - 14 R: 16 - 15	A: 16 - 15 R: 16 - 14	16 - 15
Fault	A: 19 - 17 R: 19 - 18	A: 19 - 18 R: 19 - 17	19 - 18

	Terminal connection for condition fulfilled	Terminal connection for condition not fulfilled	Terminal connection for power off
Channel 1/2 measurement end	A: 22 - 20 R: 22 - 21	A: 22 - 21 R: 22 - 20	22 - 21

A = NO configured
R = NC configured

Note!
Condition met means:
- AV 1: concentration > alarm value 1
- AV 2: concentration > alarm value 2
- Fault: error occurred

Contacts AV 1, AV 2 and fault are only affected during automatic operation.

4.4 Serial interface

RS 232 of CA 71	
SUB-D, nine-pin	Function
3	TxD
2	RxD
8	CTS
5	GND

COM 1/2 at PC	
Function	SUB-D, nine-pin
RxD	2
TxD	3
RTS	7
CTS	8
GND	5

Software protocol: 9600, N, 8, 1
Output format: ASCII

The results (measured value+engineering unit) are output in the "Data memory-Measured values" menu.
The calibration results (measured value+engineering unit) are output in the "Data memory-Calibration factors" menu.

Note!
- A null modem cable is required (not a crossed one).
- The interface does not have to be configured at the analyzer.

The following commands can be sent from the PC in order to read out data:
- "D" = Data memory-Measured values
- "C" = Data memory-Calibration factors
- "S" = Setup (parameter entry, configuration...)
- "F" = Frequency (current)

4.5 Post-connection check

Carry out the following checks after electrical connection:

Device status and specifications	Note
Are the analyzer or cables damaged externally?	Visual inspection

Electrical connection	Note
Does the supply voltage correspond to the data on the nameplate?	230 V AC / 50 Hz115 V AC / 60 Hz
Are current outputs shielded and connected?	
Do the mounted cables have adequate strain relief?	
Is the cable type route completely isolated?	Guide power supply and signal lines separately over the entire travel distance. Separate cable ducts are ideal.
Cable run without loops and crossovers?	
Are power supply and signal lines connected correctly according to wiring diagram?	
Are all screw terminals tightened?	
Are all cable entries mounted, tightened and leaktight?	
Interference suppressor at the analog output?	
Current output simulation	See procedure below

Current output simulation:

1. Hold both arrow keys down (see "Display and operating elements" chapter) and connect the analyzer to the power supply. Wait until the display shows "0 mA".
2. At your PLC, PCS or data logger, check whether the same current value is applied.
3. Press the E key. This allows you to browse to the next current values (4, 12, 20 mA, depending on the setting).
4. Check that the current values in question are also present at your PLC, PCS or data logger.
5. If the values are not present:
   a. Check the terminal assignment for analog output 1 or 2.
   b. Disconnect the analog outputs from your PLC, DCS or data logger and repeat steps 1-4 but this time measure the current values at the terminals of the analyzer and not at the PLC, DSC or data logger.
   If these current values are correct, please check your PLC, DCS, the data logger and/or the electrical cables.

5 Operation

5.1 Display and operating elements

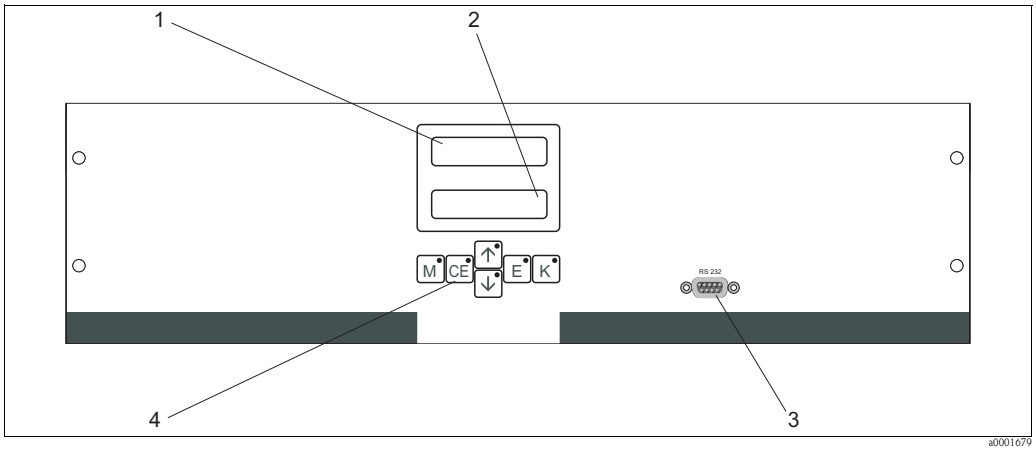

Fig. 19: Display and operating elements

1 LED display (measured value)
2 LC display (measured value + status)
3 Serial interface RS 232
4 Operating keys with indicator LEDs

5.2 Local operation

The operating keys and the integrated indicator LEDs have the following functions:

Key	Key function	Indicator LED function
M	– "Auto measuring" option – Back to the main menu from all sub-menus	Alarm value 1 exceeded
CE	– Backwards in the sub-menu horizontal, see Appendix	Alarm value 2 exceeded
↑	– Backwards in the main menu (vertical) – Increase value	Measuring range exceeded
↓	– Forwards in the main menu (vertical) – Reduce value	Measuring range undershot
E	– Select item – Accept value, move forward in submenu (horizontal)[1)]	Error message must be called up
K	– Selection in the sub-menu – Select sign +/-	Cleaning interval running

1) The number of decimal places can be changed by pressing the E key and the ↑ or ↓ key simultaneously.

5.2.1 Main menu

Access the main menu by holding down the [M] key until AUTO MEASURING is displayed.
The main menu items and information on them are explained in the following table.

Menu item	Display	Info
AUTO MEASURING	AUTO MEASURING	Calibration, measurement, rinsing time-controlled actions
PARAMETER ENTRY	PARAMETER ENTRY	Default settings for measuring ranges, alarm values, calibration, rinsing
CONFIGURATION	CONFIGURATION	Basic settings such as parameters, engineering units, assignment of analog outputs and alarm values, date, time, offset values.
LANGUAGE	LANGUAGE	For selecting the menu language
ERROR DISPLAY	ERROR DISPLAY	Displays error messages
SERVICE	SERVICE	Foe switching valves and pumps manually
DATA MEMORY 1	DATA MEMORY 1	Last 1024 measured values for channel 1
DATA MEMORY 2 (two-channel version only)	DATA MEMORY 2	Last 1024 measured values for channel 2

5.2.2 AUTO MEASURING

The actions "calibration", "measuring" and "rinsing" are triggered by time-control.
The settings for these actions are made in the "PARAMETER ENTRY" menu.
The action in question is displayed on the LC display. The most recently registered concentration value is displayed until the end of the next measurement.

Otherwise, "wait" is displayed if:
- The time of the first measurement has not yet been reached or
- The measuring interval has not yet elapsed

Note!
"Measuring" flashes when the analyzer is ready for the next measurement but has not yet received the enable signal from the sample collector or the sample conditioning unit.

5.2.3 CONFIGURATION

Note!
Some settings that can be made in this menu affect the values in the PARAMETER ENTRY menu. In view of this, run through the CONFIGURATION menu first during **initial commissioning.**

Menu item	Range of adjustment (factory settings in bold)	Display	Info
Code number	**03**	Code-No. ? 0	Input 03. If an incorrect code is entered the program exits the sub-menu.
Photometer	Depending on specification **CL-A** **CL-B** **CL-C** **CL-D**	Photometer CL-A	The setting displays the parameter that is being measured. This is defined by the product specification and set in this menu item at the factory. Do not change the value. Otherwise, you will receive an "Incorrect photometer" error message.
Default settings	Yes / no	default setup y:↑+↓ n:E	If "yes" is selected, all the settings are reset to the factory settings. You must set the current date and time (scroll through the menu, third-last point). In the event of a reset, the date for the 1st calibration and the 1st flush is set to the following day.
Measuring unit	**mg/l**	Unit of measure mg/l	The measuring unit selected depends on the type of photometer. This setting also affects the scope of the measuring range.
Calibration factor	0.10 to 10.00	Calibr. factor 1.00	The calibration factor is the ratio of the measured concentration of the calibration standard to the predefined concentration of the standard (see "PARAMETER ENTRY", calibration solution). The deviation results from factors such as reagent aging, aging of constructive components, etc. The calibration factor compensates for these effects. CA 71 checks the registered calibration factor logically. If the factor is outside of the error tolerance, the calibration is automatically repeated. If the value is still outside the tolerance range after repeating calibration, an error message appears and the analyzer continues to work with the most recently registered, logically correct factor. The last 100 calibration factors are stored in the memory with the date and time and can be retrieved by pressing the [K] key. The calibration factor can be changed manually. Optional dilution modules are taken into consideration in the calibration factor.
Concentration offset	**0.00** to 50.0 mg/l	c-Offset 0.00 mg/l	The offset gives users the option of adapting to an external comparison measurement. (Change the sign with the [K] key.)
Dilution	0.10 to 10.00 **1.00**	Dilution 1.00	If the sample is diluted externally between taking the sample and the analyzer, the dilution factor has to be entered here. If an optional dilution module is used, the factor remains 1. The dilution is taken into consideration by means of the calibration factor.
Delay to sample	20 to 300 s **80 s**	Delay to sample 80 s	Dosing time for sample or standard. During this time, the entire system is flushed with sample or standard, so when the reagent is added there is definitely only fresh sample in the mixer. If sufficient sample is available, or in the event of an external collecting vessel with a long supply line, select the highest possible value.

Menu item	Range of adjustment (factory settings in bold)	Display	Info
Analog output 1	0 to 20 mA / **4 to 20** mA	Analog output 1 4-20 mA	Selection for the measuring range scope for channel 1. If the concentration measuring range is 0 to x mg/l, either 4 mA or 0 mA corresponds to 0 mg/l. The end of the measuring range is the same in both cases at 20 mA.
Analog output 2		Analog output 2 4-20 mA	**Only two-channel version!**Selection for the measuring range scope for channel 2. The scopes of measuring range are independent of each other for channel 1 and channel 2 and are determined by the start of measuring range setting (channel 1 / channel 2) or end of measuring range setting (channel 1 / channel 2) in the PARAMETER ENTRY menu.
Alarm value AV 1-1	NO **NC** ✎ Note! Changes only take effect after a reset (power off/on)!	Alarm val. 1-1 norm. closed	Setting as to whether the contact for alarm value 1, channel 1 works as an NO or NC contact.
Alarm value AV 2-1		Alarm val. 2-1 norm. closed	Setting as to whether the contact for alarm value 2, channel 1 works as an NO or NC contact.
Alarm value AV 1-2		Alarm val. 1-2 norm. closed	**Two-channel version only!** Setting as to whether the contact for alarm value 1, channel 2 works as an NO or NC contact.
Alarm value AV 2-2		Alarm val. 2-2 norm. closed	**Two-channel version only!** Setting as to whether the contact for alarm value 2, channel 2 works as an NO or NC contact.
Error contact		Error contact norm. closed	Setting as to whether the contact for the fault message works as an NO or NC contact.
Current date/time	01.01.96 00:00 to 31.12.95 23:59	act. Date/Time 25.01.02 15:45	Setting the system clock. Format DD.MM.YY hh:mm.
Calibrate offset	Yes / no	Calibrate offs yes:K no:E	Frequency offset[1)] Pressing the [K] key starts blank value measurement for compensating the reagent's inherent color.
Frequency offset	– 5000 to +5000 **0**	f-Offset [Hz] 0	Manually changing the frequency offset.[1)]

1) Redetermine the frequency offset every time the reagents are changed or the photometer is replaced. To do so, instead of sample connect deionized water to the sample inlet to determine the frequency offset (blank value). The value is generally between 0 and 10 Hz.

5.2.4 PARAMETER ENTRY

Menu item	Range of adjustment (factory settings in bold)	Display	Info
Measuring range start 1	CL-A: 0.010 to 1.000 mg/l / **0 mg/l** CL-B: 0.010 to 1.000 mg/l / **0 mg/l** CL-C: 0.10 to 10.00 mg/l / **0 mg/l** CL-D: 0.10 to 10.00 mg/l / **0 mg/l**	Range start 1 0.00 mg/l	The specified concentration is allocated a value of 0 or 4 mA at analog output 1[1] .
Measuring range start 2		Range start 2 0.00 mg/l	**Only two-channel version!**The specified concentration is allocated a value of 0 or 4 mA at analog output 2.
Measuring range end 1	CL-A: 0.010 to 1.000 mg/l / **1 mg/l** CL-B: 0.010 to 1.000 mg/l / **1 mg/l** CL-C: 0.10 to 10.00 mg/l / **10 mg/l** CL-D: 0.10 to 10.00 mg/l / **10 mg/l**	Range end 1 2.50 mg/l	The specified concentration is allocated a value of 20 mA at analog output 1.
Measuring range end 2		Range end 2 1.00 mg/l	**Only two-channel version!**The specified concentration is allocated a value of 20 mA at analog output 2.
Alarm value AV 1 - 1	CL-A: 0.010 to 1.00 mg/l / **0.5 mg/l** CL-B: 0.010 to 1.00 mg/l / **0.5 mg/l** CL-C: 0.10 to 10.00 mg/l / **5 mg/l** CL-D: 0.10 to 10.00 mg/l / **5 mg/l**	Alarm val.1-1 5.00 mg/l	Concentration threshold value for limit relay 1, channel 1 (switching hysteresis 2% of alarm value).
Alarm value AV 2 - 1	CL-A: 0.010 to 1.000 mg/l / **1 mg/l** CL-B: 0.010 to 1.000 mg/l / **1 mg/l** CL-C: 0.10 to 10.00 mg/l / **10 mg/l** CL-D: 0.10 to 10.00 mg/l / **10 mg/l**	Alarm val. 2-1 10.0 mg/l	Concentration threshold value for limit relay 2, channel 1 (switching hysteresis 2% of alarm value).
Alarm value AV 1 - 2	CL-A: 0.010 to 1.00 mg/l / **0.5 mg/l** CL-B: 0.010 to 1.00 mg/l / **0.5 mg/l** CL-C: 0.10 to 10.00 mg/l / **5 mg/l** CL-D: 0.10 to 10.00 mg/l / **5 mg/l**	Alarm val.1-2 5.00 mg/l	**Only two-channel version!**Concentration threshold value limit relay 1, channel 2 (switching hysteresis 2% of alarm value).
Alarm value AV 2 - 2	CL-A: 0.010 to 1.000 mg/l / **1 mg/l** CL-B: 0.010 to 1.000 mg/l / **1 mg/l** CL-C: 0.10 to 10.00 mg/l / **10 mg/l** CL-D: 0.10 to 10.00 mg/l / **10 mg/l**	Alarm val. 2-2 10.0 mg/l	**Only two-channel version!**Concentration threshold value limit relay 2, channel 2 (switching hysteresis 2% of alarm value).
Time 1. measurement	01.01.96 00:00 to 31.12.95 23:59	1. Measurement 10.02.02 08:00	Date format DD.MM.YY, time hh.mm. After each change the instrument does not wait for the measuring interval. If the measurement is to start immediately, set the time in the past.
Measuring interval	2 to 120 minutes **10**	Meas. interval 10 min	Time between two measurements. If the setting is 2 minutes, the measurements take place without any pauses.
Frequency of measurement Channel 1	0 to 9 **1**[2]	n* Channel 1: 1	**Two-channel version only!** Number of measurements at channel 1 before switching to channel 2.
Frequency of measurement Channel 2	0 to 9 **1**	n* Channel 2: 1	**Two-channel version only!** Number of measurements at channel 2 before switching to channel 1.
Time 1. calibration	01.01.96 00:00 to 31.12.95 23:59	1. Calibration 01.01.02 08:00	☝ Caution! **Automatic** calibration is **not possible** for chlorine since the standard only lives for a few hours. For this reason, do **not** change the factory setting in these menus! The value of 0 h for the calibration interval means that calibration does not take place.
Calibration interval	0 to 720 h **0 h**	Calib.interval 48 h	
Calibration solution	CL-A: 0.010 to 1.000 mg/l / **0.01 mg/l** CL-B: 0.010 to 1.000 mg/l / **0.01 mg/l** CL-C: 0.10 to 10.00 mg/l / **0.01 mg/l** CL-D: 0.10 to 10.00 mg/l / **0.01 mg/l**	Calib. solution 0.01 mg/l	

Menu item	Range of adjustment (factory settings in bold)	Display	Info
1. flushing	01.01.96 00:00 to 31.12.95 23:59	1. Flushing 01.01.02 08:10	Time of 1st flushing (DD.MM.YY, time hh.mm). After each change the instrument does not wait for the flushing interval. If the flushing is to start immediately, set the time in the past. – Set the time to 4:00 to track the effects of flushing in the curve. – If you have started flushing manually, you should redefine the time of the 1st flushing because the interval is calculated starting from the last flushing.
Flushing interval	0 to 720 h **48 h**	Flush. interval 48 h	Time between two flushings. The "0 h" setting means that cleaning no longer takes place.
Flushing hold on	0 to 60 s **60 s**	Flushing hold on 60 s	Dwell time of flushing solution in the pump-mixer-photometer line. Recommended: 30 to 60 s.

1) Option 0 or 4 mA: see "CONFIGURATION".

2) All channels set to 0 means that the channel is selected externally. All channels set to 1 means alternating, beginning with channel 1.

Note!
- Carry out flushing with standard cleaners approx. 3-4 hours **before** the next calibration.
- Flushing with special cleaners (e.g. hydrochloric acid or ammonia) has a lasting effect on calibration. Therefore, carry out this cleaning **3-4 hours before** calibration. Then rinse with deionized water afterwards.

5.2.5 LANGUAGE

The following languages are available:
- Deutsch
- English
- Français
- Espanol
- Suomi
- Polski
- Italiano

5.2.6 ERROR DISPLAY

Note!
- This menu is a "Read-Only-Menu".
- You can find the individual error messages, their meaning and solutions to problems in the "Troubleshooting instructions" chapter.
- If at least one error message is present, the signal output is set to "fault".
- Causes of faults are queried with every measurement. If an error which occurred previously no longer exists, the message is automatically deleted. If this does not happen automatically, error messages can be deleted by quickly switching the analyzer off and back on again.

5.2.7 SERVICE

Menu item	Display	Info
Pumps and valves	V1 2 3 4 P1 2 G P S 1 z s s s	"Virtual switching board" Various valve and pump combinations can be selected. The setting options are: – Valve 1: P (sample) or S (standard) – Valve 2: S (standard) or R (cleaner) – Valve 3 (**two-channel version only**): 1 (channel 1) or 2 (channel 2) – Valve 4 (to empty the cell, thereby achieving better cleaning and minimizing memory effects): z (closed) or a (open) – Pump 1 (sample or standard/cleaner) and pump 2 (reagents): s (stop) or g (go) – Mixture: The reagent and sample pumps can be switched on together so that they run in the same ratio as for filling the sample-reagent mixture in measurement mode. s (stop) and g (go). ✎ Note! G can only be selected if P1 and P2 are "Off". The following valve combinations are possible: (applies to one-channel and two-channel version, whereby, in the latter, the user chooses between channel 1 and 2 by means of valve 3) – V1: P, V2: S Passage for the sample. This combination is automatically reset on leaving the service menu. – V1: S, V2: S Passage for standard solution – V1: S, V2: R Passage for cleaner
Signal frequency	0 Hz	Signal frequency of the photometer

5.2.8 DATA MEMORY-measured values

✎ Note!
Two menus - "DATA MEMORY 1" (measured values) and "DATA MEMORY 2" (calibration data, see the following section) - are only available in the **two-channel version.** In the one-channel version there is only one menu "DATA MEMORY".

Menu item	Display	Info
Measured values	53.1 µg/l 02.02.99 22:47	The data memory contains the last 1024 concentration measured values with date and time. If no values are available, "Empty set" appears. Browse through the data sets with the ↑ and ↓ keys.
Serial output	Serial output yes: K no: E	You can output **all** data sets (in ASCII-format) via the serial interface. For this, the PC must be configured as follows: 9600, N, 8, 1. To send data, the PC must send the ASCII character 68 ("d").
Clear data	Clear data y: ↑+↓ n: E	This deletes **all** data sets.

5.2.9 DATA MEMORY-calibration data

Note!
You get to the data memory calibration data by means of the CONFIGURATION menu. In the "Calibration factor" menu item, press the [K] key.

Menu item	Display	Info
Calibration factor	Calibr. factor 1.00	This data memory contains the last 100 calibration factors with date and time. If no values are available, "Empty set" appears. Browse through the data sets with the [↑] and [↓] keys.
Serial output **only possible via PC!**	No display	You can output **all** data sets (in ASCII-format) via the serial interface. For this, the PC must be configured as follows: 9600, N, 8, 1. To send data, the PC must send the ASCII character 67 ("c").
Clear data	Clear data y: ↑+↓ n: E	This deletes **all** data sets.

5.3 Calibration

5.3.1 Standard calibration data

The signal strength is processed device-internally as a frequency.
The following table provides an overview of the standard calibration data.

Note!
Compare these values to your own data.
After changes in the CONFIGURATION menu and in the event of software updates, you can check and, if necessary, change the calibration data in the sub-menu.

	Measuring range	Concentration [mg/l]	Frequency [Hz]
Free available or total chlorine, lower measuring range CL-A+B	0.010 to 1.000 mg/l	0.000 0.100 0.200 0.300 0.400 0.500 0.600 0.700 0.800 1.000	0 313 759 1156 1641 2058 2469 2889 3241 3820
Free available or total chlorine, upper measuring range CL-C+D	0.10 to 10.00 mg/l	0.00 1.00 2.00 3.00 4.00 5.00 6.00 7.00 8.00 10.00	0 278 487 649 795 924 1019 1115 1203 1350

5.3.2 Calibration example

Since automatic calibration is not possible, you must compute the calibration factor and enter it at the analyzer.

1. Take some of the sample out of the collecting vessel to determine the chlorine in the laboratory.
2. Make a note of the current measured value of the analyzer.
3. Perform the laboratory measurement simultaneously.
4. Calculate the calibration factor (= laboratory value: analyzer measured value).
   This value has to be entered at the analyzer.
5. Hold [M] down until AUTO MEASURING appears.
6. Use [↓] to move through the CONFIGURATION menu and press [E].
7. Use [E] ⑧③ṁ③ ⑧③ ⑧ω̇V̇ ☝Calibration factor" item.
8. Select the item with [E].
9. Enter the computed calibration factor with the aid of the [↓] and [↑] keys.
10. Press [E] to accept the value and then press [M] twice to return to the main menu.
11. Press [E] again. This takes you back to the measuring mode.

The new calibration factor is accepted and the analyzer measured value and laboratory measured value must match.

Note!
If the measured value and the laboratory value do not match after entering the factor, check the calculation and correct the factor entered, if necessary.

6 Commissioning

6.1 Function check

Warning!
- Check that all connections have been made correctly. Check, in particular, that all hose connections are secure so that no leaks occur.
- Ensure that the line voltage corresponds to the voltage specified on the nameplate.

6.2 Switching on

6.2.1 Dry commissioning

Note!
- If possible, let the analyzer warm up in standby mode before commissioning ("Auto measuring" display). The time can be defined via the "1. measurement" option in the PARAMETER ENTRY menu.
- At the start of measurement with a cold analyzer, the first measuring results will be incorrect. The reaction is temperature-dependent and if the temperature is too low the predefined reaction time is insufficient for a complete reaction. For this reason, never carry out calibration with a cold analyzer. Wait at least two hours before carrying out calibration.

When the analyzer has been configured and calibrated, the measuring cycle starts automatically. Configuration is no longer necessary.

To perform initial commissioning or to readjust the device parameters, proceed as follows:

1. Plug in the analyzer's plug with grounding contact into the socket.
2. Press the [M] key until AUTO MEASURING is displayed.
3. Select the CONFIGURATION menu and configure up to and including the "Current date/time".
   With [M] you can return to the main menu.
4. Now work through the PARAMETER ENTRY and SERVICE menus.
   With [M] you can return to the main menu.
5. Select CONFIGURATION again and use [E] to go to the "Calibrate offset" menu item.
6. Connect a vessel containing distilled water to the "Sample" connection and start the frequency offset ([K] key). The value determined is displayed and saved.
7. Then reconnect the sample line.
   With [M] you can return to the main menu.

The analyzer starts automatically (triggered by a control signal or integrated timer) with the "Calibration", "Measurement", and "Flushing" procedures in accordance with the device parameters that you have set (1st calibration, 1st measurement, 1st flushing times and the respective intervals control the procedure).

Settings for

	Function	Duration [s]	Range of adjustment
Measurement	Flushing (sample)	3 x 15	
	Delay to sample	20 to 999	CONFIGURATION / "Delay to sample"
	Stabilization	8	
	1. measurement (basis)		SERVICE / "Pumps and valves"
	Fill mixture	30	
	Reaction	see Technical	
	2nd measurement (plateau)	data	
	Flushing (sample)		
		30	

	Function	Duration [s]	Range of adjustment
Cleaning	Pump cleaning solution Allow to react Pump cleaning solution	½ flushing duration 5 ½ flushing duration	PARAMETER ENTRY / "Flushing hold on"

6.2.2 Wet commissioning

Wet commissioning is different to dry commissioning in that in wet commissioning you fill the reagent lines before the automatic cycles are started.

Proceed as follows:

1. Plug in the analyzer's plug with grounding contact into the socket.
2. Press the [M] key until AUTO MEASURING is displayed.
3. Select the SERVICE menu.
4. Switch the P2 reagent pump "on" (select P2 with [E] and set to "g" with [↑]) and leave it running until you can tell that there are reagents at the T-hose connector. After this, switch P2 "off" (s) again with [↓].
5. Now switch the valves to passage for standard (select V1: S, V2: S; with [E] or [CE] switch to "S" with [↑]) and then switch the P1 sample pump "on". Leave the pump running until you can tell that there is standard at the T-hose connector. Switch P1 back "off".
6. Now switch the valves to passage for cleaning agent (select V1: S, V2: R; with [E] or [CE], switch to "R" or "S" with [↑]) and then switch the P1 sample pump "on". Leave the pump running until you can tell that there is cleaning agent at the T-hose connector. Switch P1 back "off".
7. Now switch the valves to passage for sample (select V1: P, V2: S; with [E] or [CE], switch to "P" or "S" with [↑]) and then switch the P1 sample pump "on". If you notice that sample is present at the T-hose connector, let the pump run for another 2 minutes. This removes any standard or cleaner residues.
   Then switch P1 "off".

Note!
For the two-channel version, valve V3 must also be set for switchover between channel 1 and channel 2.

8. Now proceed as with dry commissioning (from step 2).

6.2.3 Using a dilution module

You can extend the measuring range of your analyzer with the sample dilution module.

How it works:
- The analyzer determines the absorption of the sample at the specified wavelength. It does not matter whether the sample was diluted previously or not.
- The characteristic of the photometer (—> standard calibration data) refers to the concentrations of the diluted sample and not to those of the (undiluted) original sample.
- The dilution factor is not taken into account until the measured value is calculated.
- The concentration information you specify for the measuring range and the alarm values in PARAMETER ENTRY refer to the concentrations of the original sample.

Note!
You achieve maximum measuring accuracy if you also dilute the standard with the dilution module. In the event of a 1:10 dilution, you have to use a 10 mg/l standard solution instead of a 1.0 mg/l standard solution (without a dilution module) for example.
Balance changes to the dilution ratio (e.g. through hose aging) with the calibration. The calibration factor determined takes into account all deviations from the ideal state through reagents, the photometer and dilution.

Installing the dilution module

The dilution module is supplied ready to use.

Installation:

1. Release the sample pump hose from the hose connector to valve 1 (→ 20, item 4).
2. Connect the sample hose of the dilution module (black/black or yellow/blue, depending on the version) to the hose connector that is now free.
3. Connect the T-section (item 1) of the dilution module to the input of the sample pump (hose box K1). Use the original sample pump hose for this purpose.
4. Fit the dilution module onto the free hose box positions of the sample pump.
5. Connect an outflow hose (O) to the free outlet of the T-piece (item 1).
   Route this hose in the device in such a way that is guided at least 20 cm upwards and then into the open outlet. This prevents the hose from running dry.

Caution!
Do not connect the outflow hoses of the dilution module and the photometer.

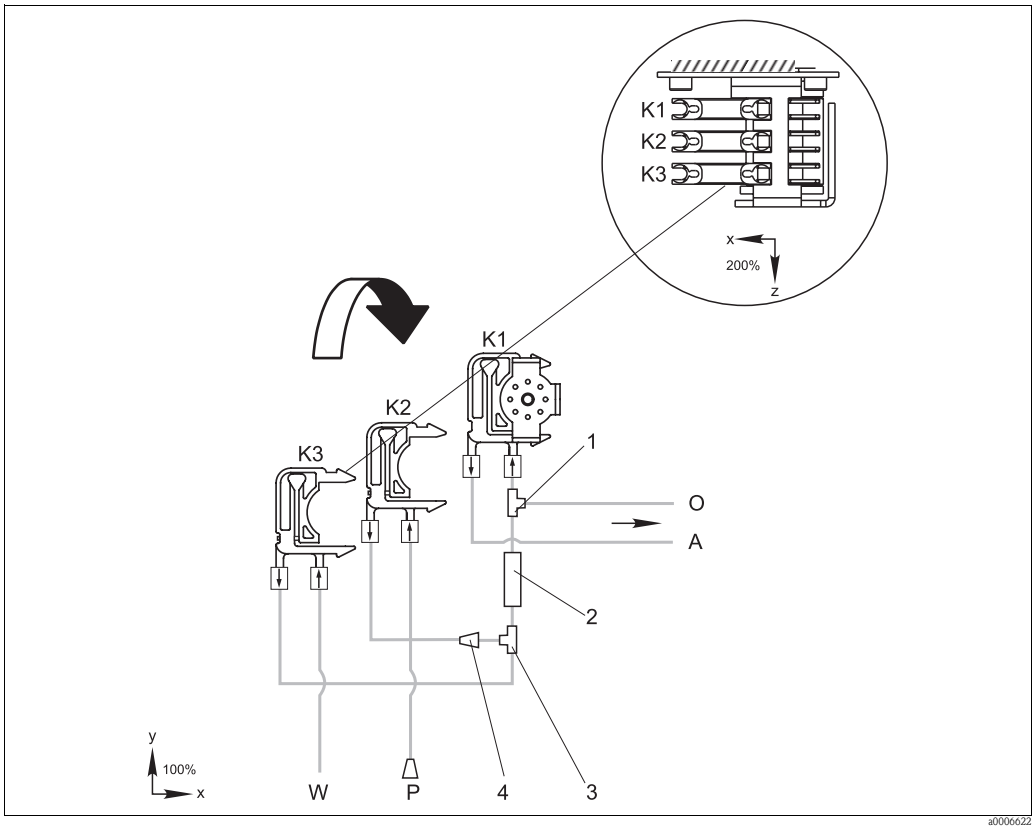

Fig. 20: Dilution module

K1 Hose box of the original sample pump
K2 Hose box for additional sample (standard)
K3 Hose box for dilution water
A Sample supply to photometer
O Overflow (in outlet of analyzer)
P Sample hose (sample or standard)
W Dilution water inlet (to be provided by the client)
1 T-section 3.2 x 3.2 x 3.2 mm (0.13 x 0.13 x 0.13 inch)
2 Static mixer 122-012
3 T-section 3.2 x 3.2 x 3.2 mm (0.13 x 0.13 x 0.13 inch)
4 Hose connector 3.2 x 1.6 mm (0.13 x 0.06 inch)

Changing parameters

Note!
The following section only lists the parameters where you have to make changes to the standard settings.
Start with CONFIGURATION.

CONFIGURATION	
Delay to sample	Increase the value of the standard setting by 40 seconds since additional sample volume is drawn in.

PARAMETER ENTRY	
Measuring range start 1 / measuring range start 2	Enter values that refer to the concentration of the undiluted sample. If you are using a dilution module with the factor 10, for example, multiply the settings to date (without the dilution module) by 10.
Measuring range end 1 / measuring range end 2	
Alarm values AV 1-1 / 1-2 / 2-1 / 2-2	
Calibration solution	Enter the original concentration (undiluted) of the standard here.

7 Maintenance

Caution!
You may not carry out any procedures **not** listed in the following chapters yourself.
This work may only be carried out by Service.

Note!
At the end of any maintenance work, you must perform an F-offset measurement and a calibration. In this way, you adapt the analyzer to the altered conditions.

7.1 Maintenance schedule

All the maintenance tasks that have to be carried out during normal operation of the analyzer are explained below. If you are using a sample conditioning unit, e.g. CAT430, coordinate the maintenance work required for it with that of the analyzer. For this, read the maintenance chapter in the Operating Instructions in question.

Period of time	Task	Note
Weekly	– Check and note down the calibration factor (for service purposes) – Move the valve hoses and spray with silicon spray (extends the operating time).	CONFIGURATION
Every 2 weeks	– Replace reagents and redetermine the calibration factor	– see chapter "Replacing reagents" and CONFIGURATION – You must release the box of the sample pump for this purpose.
Monthly	– Flush sample line hose system with pressurized water (disposable injector), check and replace reagents if necessary. – Flush the sample line hose system with 12.5% bleaching lye (sodium hypochloride) and rinse thoroughly with water[1)] ⚠ Warning! Caustic.Wear protective gloves and goggles. Beware of reagent splashing. – Spray pump hoses and roller heads with silicone spray – Check sample collector for fouling and clean it if necessary	– see chapter "Replacing reagents" – You must release the box of the sample pump. – Connect the disposable injector instead of the sample supply. – SERVICE V1: S, P1: g, P2: s, V2: S Attach solution to sampling connection.
Every 3 months	– Cleaning drain lines: Flush all hoses with 10% ammonia solution and then rinse with sample for 30 minutes at least – Rotate pump hoses	
Every 6 months	– Replace pump hoses – Replace valve hoses	– see chapter "Replacing pump hoses"

1) With standard cleaner for CA71SI-A

Note!
Prior to working on the reagent hoses, the hoses must be disconnected from the canisters in order to prevent contamination of the reagents.

7.2 Replacing reagents

Warning!
- There is a danger of crushing at the door and pump heads.
- Refer to the warning instructions in the safety data sheets when handling reagents. Wear protective clothing, gloves and goggles.
- Make sure the workplace is well ventilated when you work with chlorine bleach and/or ammonia. If you feel unwell, consult a physician immediately.
- If reagents come into contact with the skin or eyes, carefully rinse with copious amounts of water and consult a physician immediately.
- Never add water to reagents. Reagents containing acids may splash and heat may build up.

If you store the reagents correctly (in the dark, not over 20 °C) they will keep (unopened) for a minimum of 12 weeks from the date of production (batch number). When this period of time has expired, the reagents must be checked and replaced where necessary. A cool, dark storage area is required to achieve the maximum shelf life.

The reagents must be replaced when:
- The reagents have been contaminated by sample (see "Troubleshooting instructions")
- The reagents are too old
- The reagents have been spoilt by incorrect storage conditions or environmental influences.

7.2.1 Checking reagents

1. Produce a standard (1 mg/l Cl_2).
2. Check the concentration of the standard in the laboratory. Adapt the values (PARAMETER ENTRY, calibration solution") or replace the standard solution.
3. Mix 10 ml standard solution and 5 ml of each reagent in a beaker. You must replace the reagents if there is no visible coloration after max. ten minutes.

The finished mixture must be free of particles.
The reagents must be replaced if no visual coloration (blue) occurs after max. 2 minutes or if the mixture is not free of particles.

7.2.2 Replacing reagents

1. Carefully remove the hoses from the canisters and wipe them with a dry (paper) towel. Wear protective gloves when doing this.
2. Switch on the reagent pump for about 5 seconds.
3. Flush the reagent hose with plenty of distilled water (see SERVICE).
   For this purpose, place a beaker with distilled water into the device.
4. Replace the reagent canisters and feed the hoses into the new canisters.
5. Fill the reagent hose with the new reagents (SERVICE). Switch all pumps to "g" for this purpose. Do not switch the pumps off ("s") until no more air bubbles are to be seen in the hoses.
6. Determine the reagent blank value by using deionized water as a sample (see "CONFIGURATION").
   The value determined is saved by the analyzer as the frequency offset.
7. Then carry out a calibration (see chapter "Calibration").

7.3 Replacing pump hoses

Warning!
When removing hoses from the hose nozzles, beware of reagent splashing.
For this reason, wear protective clothing, gloves and goggles.

The peristaltic pumps used for the analyzer convey the medium in a combination of vacuum and displacement pump. The pump rate is dependent on the elasticity of the pump hoses. Elasticity

decreases and the pump rate drops as mechanical stress increases. Wear depends on mechanical stress (measuring interval, pump pressure). Up to a certain degree, the wear effect can be compensated by calibration. If the impairment in hose elasticity is too great, the pump rate is no longer reproducible and this leads to incorrect measurements. This is why it is necessary to replace the hoses.

Removing the old hoses

1. Remove the reagent hoses from the reagent canisters in order to prevent contamination of the reagents.
2. Flush the old hoses with water first and then with air to empty them (see SERVICE).
3. Remove the hoses from the nipples of the hose boxes (→ 21, item 5).
4. Release the hose box(es) (1 to 3 per pump):
   – Press against the lower retainer (item 3).
   – You can now remove the hose box along with the pump hose.
   – Remove the old hose from the case any dispose of it.
   – Clean the hose box and the roller head (item 1) with water.

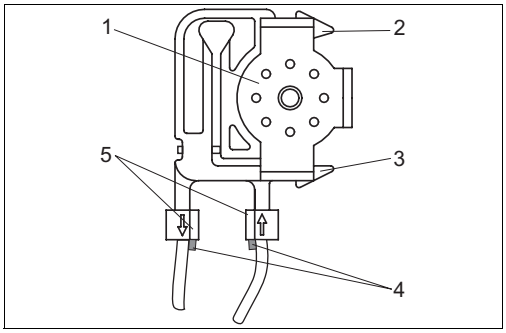

1 Roller head
2 Upper retainer of hose box
3 Lower retainer of hose box
4 Guide at pump hose
5 Nipple with guide

Fig. 21: Reagent pump

Installing the new hoses

1. Fit the new hose on the hose box.
2. First pull the hose downwards at both ends and then push the guide on the hose into that of the nipple on the hose box. Make sure it is seated correctly.
3. First place the hose box into the upper retainer (item 2) of the pump and then press the case into the lower retainer (item 3). Make sure the hose boxes are in the correct order in the pump (→ 22).

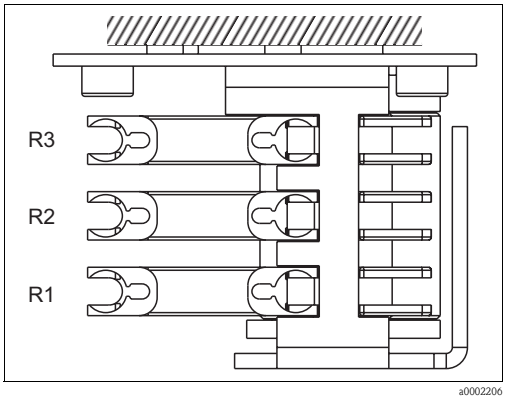

Fig. 22: Reagent pump, top view

R1 Reagent 1
R2 Reagent 2 (if present)
R3 Reagent 3 (if present)

4. Spray the new pump hoses, the hose boxes and the roller heads with silicone spray.

5. Reconnect the reagent hoses to the canisters.
6. After installation, refill the hoses with sample, standard or cleaner (SERVICE)[1].
7. Determine the frequency offset (CONFIGURATION) and carry out calibration ("Calibration").

Caution!
Make sure you connect the new pump hoses to the correct connections at the T-hose connector.
For the order numbers of the pump hoses, see the chapter "Troubleshooting"/"Spare parts".

Setting the contact pressure of the pump

If the pump hoses cannot be filled free of bubbles, adjust the adjuster screw for the contact pressure of the pump:

1. Release the adjuster screw (→ 23, item 3) to the extent that no more sample is pumped.
2. Tighten the screw just to the point that sample is pumped.
3. Tighten the screw another complete rotation.

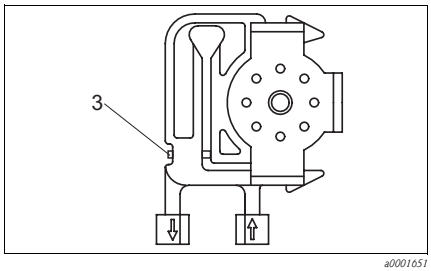

Fig. 23: Sample pump

3 Adjuster screw for the contact pressure

Caution!
Adjust the contact pressure of the reagent hoses so that no sample is pumped into the reagent. Otherwise the reagent becomes immediately unusable.
For this reason, only perform tests with distilled water.

7.4 Replacing valve hoses

To replace the hoses, proceed as follows:

1. Flush the old hoses with water first and then with air to empty them (see SERVICE).
2. Remove the hoses from the valves:
   a. You can disconnect the front hoses directly because the valves are open when de-energized
   b. To remove the back hoses, press the black button on the valve and disconnect the hoses.
3. Spray the new hoses and valves with silicone spray before inserting them.
4. Reverse the sequence of operations to install the new hoses.
   Ensure that the hoses are connected correctly (→ 24).
5. After installation, refill the hoses with sample, standard or cleaning agent (SERVICE).
6. Determine the frequency offset (CONFIGURATION) and carry out calibration ("Calibration").

1) Make sure that the hoses are bubble-free when filled. If not, check the sample flow rate (see below).

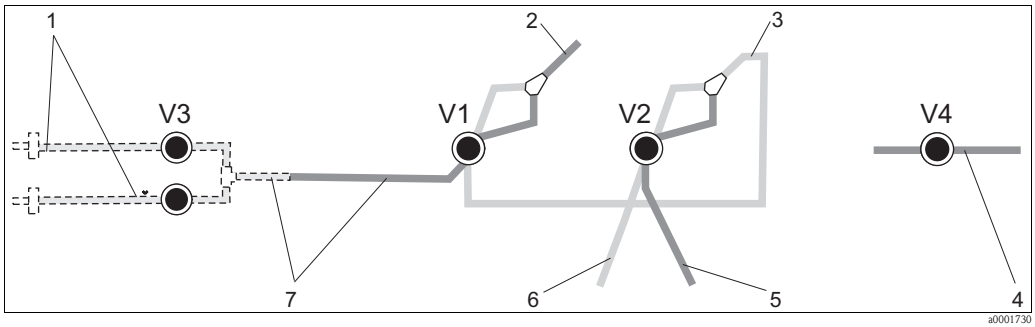

Fig. 24: Valves and valve hoses

V1-4 Valves 1, 2 and 4 (if present)
V3 Channel switching
1 Sample
2 To the pump
3 Y-piece, hose connection to valve 1, at rear
4 Outlet hose
5 Hose valve 2 at front, standard
6 Hose valve 2 at rear, cleaner
7 Hose valve 1 at front, sample

7.5 Replacing the static mixer

Proceed as follows to replace the mixer (see "Troubleshooting/spare parts"):

1. Rinse first with water and then with air (see SERVICE).
2. Unscrew the four screws on the photometer housing and remove it.
3. Disconnect the mixer from the photometer and from the T-section under the photometer housing or release the mixer from the retainer.
4. Remove the old mixer and insert the new one.
5. Connect the new mixer to the photometer and the T-section again.
6. Attach the photometer housing and screw it down.
7. After installation, refill the hoses with sample, standard or cleaning agent (SERVICE).
8. Carry out a calibration (PARAMETER ENTRY).

7.6 Replacing the photometer cell

Caution!
Using electronic assemblies
Electronic assemblies are sensitive to electrostatic discharge (ESD). For this reason, discharge yourself at a protective earth before handling the assemblies.

Removing the old cell

1. Rinse first with water and then with air (see SERVICE).
2. Switch the analyzer off.
3. Unscrew the four screws on the photometer housing and remove it.
4. Release the nuts from the guide screws and remove the photometer completely.
5. Unscrew the four screws on the side of the photometer on which there is no ribbon cable.
6. Take the photometer's electronics apart.
7. Take out the cell and remove the hoses.

Caution!
Do not **under any circumstances** touch the optical window of the cell with your fingers! Otherwise, traces of grease remain on the optical surfaces. This can lead to corrupted measured values.

Installing the new cell

1. Insert the new cell.
2. Connect the cell to the hoses such that the sample is fed in from below.
3. Secure the hoses with the supplied cable connectors to stop the cell from slipping.
4. Reassemble the photometer and tighten the screws and nuts.
5. Attach the photometer housing and screw it down.
6. After installation, refill the hoses with sample, standard or cleaning agent (SERVICE).
7. Carry out an f-offset measurement (CONFIGURATION) and a calibration ("Calibration").

7.7 Cleaning

Caution!
When cleaning, ensure that you do not damage the nameplate on the analyzer. Do not use any solvent-based cleaning agents.

To clean the analyzer housing, proceed as follows:
- Stainless steel housing (stainless steel SS 1.4301 (AISI 304)):
  With a lint-free cloth and Glittol RG 10.51
- GFR housing:
  With a damp cloth or with tenside-based (alkaline) cleaning agent.

7.8 Placing out of service

You must place the analyzer out of service before shipping or before extended breaks in operation (more than 5 days).

Caution!
Before placing the instrument out of service, thoroughly rinse all the lines with clean water.

Proceed as follows:

1. Remove the reagent and standard hoses from the canisters and immerse them in a tank containing clean water.
2. Switch valve 1 to "Standard" and switch pumps 1 and 2 on for one minute (SERVICE menu).
3. Remove the hoses from the water and allow the pumps to run until the hoses are completely dry.
4. If you are using a continuous sample supply:
   Disconnect the sample line.
5. Flush the sampling hoses with clean water and then with compressed air to empty the hoses completely.
6. Remove the valve hoses from the valves.
7. Release the pump hoses by removing the hose box from the holder from below.

Note!
Store open reagent and standard containers in the refrigerator. Bear the shelf life in mind.

8 Accessories

Note!
The following section provides you with information on the accessories which could be supplied at the time this documentation was issued.
Please contact your local Service Center for accessories that are not listed here.

8.1 Collecting vessel

– For sampling from pressurized systems
– Results in an unpressurized continuous sample stream

- Collecting vessel without level monitoring; Order No. 51512088
- Collecting vessel with level monitoring (conductive); Order No. 51512089
- Level monitoring retrofit kit; Order No. 71023419

8.2 Reagents, cleaners, standard solutions

- Reagent set for free available chlorine, active, 1 l each of CL1+CL2; Order No. CAY543-V10AAE
- Reagent set for free available chlorine, inactive, 1 l each of CL1+CL2; Order No. CAY543-V10AAH
- Reagent set for total chlorine, active, 1 l each of CL1+CL2; Order No. CAY546-V10AAE
- Reagent set for total chlorine, inactive, 1 l each of CL1+CL2; Order No. CAY546-V10AAH
- Cleaner, 1 l; Order No. CAY544-V10AAE

Note!
Please note the disposal instructions in the safety data sheets of the reagents!

8.3 Maintenance kit

- Maintenance kit CAV 740:
  – 1 set of pump hoses, yellow/blue
  – 1 set of pump hoses, black/black
  – 1 pack of hose connectors each
  Order No. CAV 740-1A
- Maintenance kit CAV740:
  – 1 set of pump hoses, violet/white
  – 1 set of pump hoses, black/black
  – 1 pack of hose connectors each
  Order No. CAV740-4A

8.4 Hose cleaner

- Alkaline cleaner, 100 ml (3.4 fl.oz.); Order No. CAY746-V01AAE
- Acidic cleaner, 100 ml (3.4 fl.oz.); Order No. CAY747-V01AAE

8.5 Dilution module

Dilution module
1 set of pump hoses, 2 hose boxes, 1 set of hose connectors, static mixer
- Dilution 1:3
  Order No. C-A030228-10
- Dilution 1:10
  Order No. C-A030228-11

8.6 Additional accessories

- Interference suppressor for control, power and signal lines
  Order No. 51512800
- Silicone spray,
  Order No. 51504155
- Valve set, 2 pieces, for two-channel version,
  Order No. 51512234
- Upgrade kit for upgrading from one-channel to two-channel version,
  Order No. 51512640

9 Troubleshooting

9.1 Troubleshooting instructions

Although the analyzer is not very prone to faults due to its simple design, problems at the measuring point can, of course, not be completely ruled out.
Possible errors, their causes and their possible remedies are thus listed below.

9.1.1 Error messages

Error message	Possible cause	Tests and / or corrective measures
Cell dirty	Not enough light intensity at receiver, e.g. due to sedimented particles	– Flush with 12.5% bleaching lye (monthly maintenance) – When using a CAT 430: Check the filter.
Wrong cell	Wrong cell	Check the setting in the CONFIGURATION menu, "Photometer".
No sample	No sample	Establish sample transfer.
	Level measurement defective	Check level measurement at the sample collector.
Spillage error	Leak at canisters or hoses	Replace defective components and clean and dry the analyzer or those components affected by the leak.
No measuring signal	Photometer defective	Inform E+H Service
	Electrical connection	Check all electrical connections.
	Fuse defective	Replace fuse F4 or F5 (semi-delay 0.2 A)

9.1.2 System errors/process errors without messages

Error	Possible cause	Tests and / or corrective measures
Measured values always the same	Reagents contaminated or aged	Simple check: Mix 5-10 ml of standard solution and 5 ml of reagent in a beaker. If it does not change color after max. 10 min, replace the reagents.
	No sample, no reagents	Make sure sample and reagents are supplied, check level monitor and clean if necessary
	System blocked	Flush with 12.5% bleaching lye (monthly maintenance)
Measured values inaccurate	Incorrect concentration of standard	Check the concentration in the laboratory. Adjust the standard accordingly ("PARAMETER ENTRY", "Calibration solution") or replace the standard.
	Reagents contaminated or aged	Simple check: Mix 5-10 ml of standard solution and 5 ml of reagent in a beaker. If it does not change color after max. 10 min, replace the reagents.
	Reagent blank value too high	After replacing the reagents, carry out an offset calibration and then a calibration (CONFIGURATION, "Offset calibration")
	Wrong dimension	Check the setting in the CONFIGURATION menu, "Measuring unit" (e.g. ion instead of element).
	Wrong cell	Check the setting in the CONFIGURATION menu, "Photometer"
	Sample suction time too short	Increase the suction time (CONFIGURATION, "Delay to sample")
	Matrix effects (substances that interfere with the photometric method)	Detect interfering substances (see Technical Information, "Measuring principle"), possibly use sample conditioning
	Filter life too long	Take a counter sample at the analyzer inlet and check the concentration in the laboratory. If there is no deviation to the analyzer measured values, replace the ultrafiltration modules or reversible flow filters more frequently.
	System blocked or contaminated	Flush with 12.5% bleaching lye (monthly maintenance)
	Dosing	Replace pump hoses.
	Cell dirty	Flush with 12.5% bleaching lye first and then with 5% hydrochloric acid

Error	Possible cause	Tests and / or corrective measures
Counter sample in the laboratory delivers deviating measured values	Sample aging	Shorten time between sampling and analysis.
Measured value transfer defective	Wrong size for analog output	Check the setting (CONFIGURATION, "Analog output 1" or " 2").
	Incorrect measuring range	Adjust measuring range (PARAMETER ENTRY, "Measuring range")
	Background noise	Check electrical cables for interference from strong sources of induction.
Analyzer will not switch on	No power	Check the electrical connection and ensure power supply.
	Fuse	Replace fuse F1 (slow-blow 0.5 A)
Analyzer is running but display reading is garbled or off	Initialization failed	Switch the analyzer off and after approx. 30 seconds back on.
Pumps fail to run	Leak	See "Spillage error" error message
	Leak sensor bypassed	Interrupt the contact between the two leak sensors (terminals 67-66)
	Fuse	Check all fuses and replace if necessary.
	Pump defective	Service
Measurement does not start	Leak at photometer	Service
"Measurement" display flashes	Time of 1st measurement not reached	The date must be between 01.01.1996 and the current date.
	Interval not expired	Change parameter setting.
Flushing does not start	Time of 1st flushing not reached	The date must be between 01.01.1996 and the current date.
	Interval not expired or 0 h	Change parameter setting.
Leak at photometer	Device or discharge blocked	Remove blockage. Service
Blockage, deposits in device	Water hardness	Lime deposits can be removed by flushing with 5% hydrochloric acid. If necessary, dose EDTA in sample stream to prevent precipitation (EDTA not with CA71HA).
	Not enough sample conditioning	Shorten the cleaning intervals of sample conditioning.

9.2 Spare parts

9.2.1 Overview for

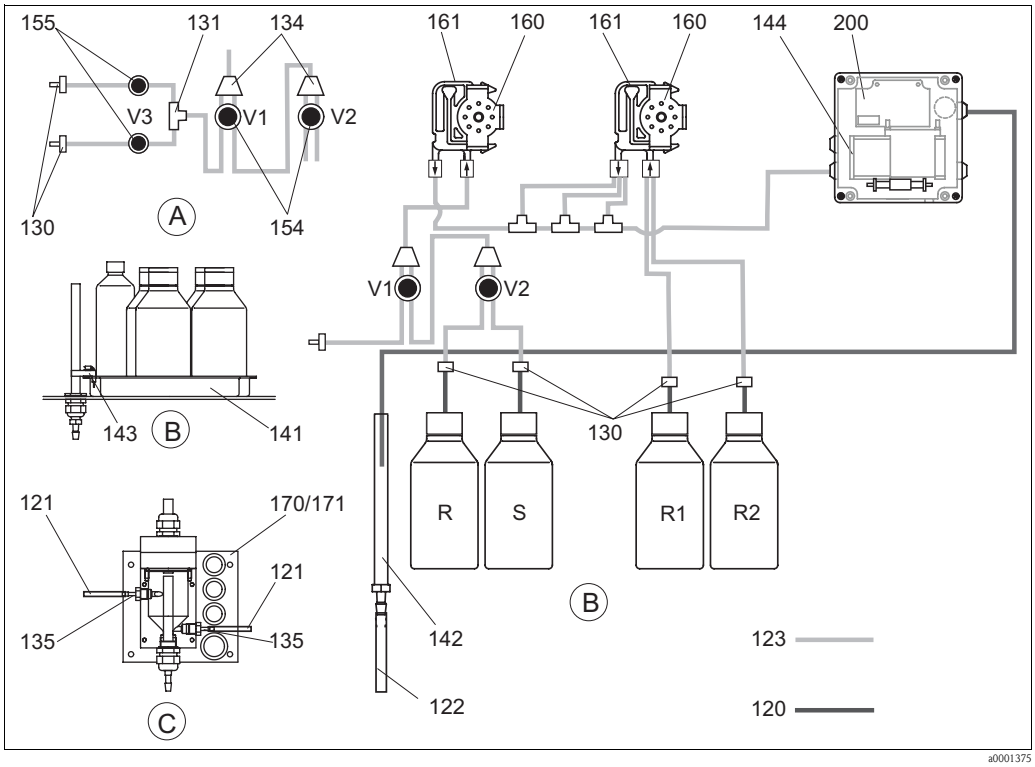

Fig. 25: Overview of components and spare parts

A	*Sample input, two-channel version*	*R*	*Cleaner canister*
B	*Standard and reagent canisters*	*R1*	*Reagent 1 canister*
C	*Collecting vessel*	*R2*	*Reagent 2 canister*
P	*Sample*	*S*	*Standard solution canister*

9.2.2 Spare parts for sample and reagent transportation

Item	Spare part	Order number
120	Norprene hose, 1.6 mm	51504116
121	C-Flex hose, 3.2 mm (permeate inlet and overflow with sample collector.)	51504114
122	C-Flex hose ID 6.4 mm	51504115
123	C-Flex hose, 1.5 mm	51512535
130	Hose connector 1.6 mm x 1.6 mm (10 pieces)	51506495
131	T-hose connector 1.6 mm x 1.6 mm x 1.6 mm (10 pieces)	51506490
134	Y-hose connector 1.6 mm x 1.6 mm x 1.6 mm (10 pieces)	51512096
135	Connection nipples for sample collector (10 piece)	51512099
136	T-hose connector 3.2 mm x 3.2 mm x 3.2 mm (10 pieces)	51516166
140	Mixer set, complete (2 pieces)	51512101
141	Collecting tank	51512102
142	Outlet pipe with hose nipple (2 pieces)	51512104
143	Leak sensor for collecting tank	51512103
154	Valve, complete	51512100
155	Valve set for two-channel version	51512234

Item	Spare part	Order number
160	Roller head with holder for hose pump	51512085
161	Hose box for pump	51512086
170	Collecting vessel with level monitoring	51512089
171	Collecting vessel without level monitoring	51512088

9.2.3 Analyzer spare parts

Item	Spare part	Order number
130-133	Maintenance kit CAV740 (CA71CL-C+D): – 1 set of pump hoses, blue/yellow (item 113, 12 piece 51506434) – 1 set of pump hoses, black/black (12 piece 51506497) – 1 pack of hose connectors each Maintenance kit CAV740 (CA71CL-A+B): – 1 set of pump hoses, violet/white (item 113, 12 piece 51508945) – 1 set of pump hoses black/black (12 piece 51506497) – 1 pack of hose connectors each	CAV740-1A CAV740-4A
144	Photometer cell – CL-A+B – CL-C+D	 51513566 51505776
200	Photometer – CL-A+B – CL-C+D	 51513230 51513231

9.3 Software history

Date	Version	Changes in the software	Documentation
08/2006	6.0	Extension ■ New parameter FE-D	BA360C/07/xx/07.06
06/2006	5.9	Extension ■ New parameter NO-D ■ Stepping motor position is also reset in a reset ■ New stepping motor setting for CU-A/B (50 rpm) ■ Spanish replaces Dutch and Hungarian	BA355C/07/xx/07.06
09/2005	5.8	Extension ■ New parameter PH-E ■ Altered factory settings for SI-A and AM-B ■ Characteristics for FE-B, CU-A and CR-A extended ■ Measuring range limitation increased to 50000 for all parameters and engineering units ■ Calibration value can be adjusted to end of measuring range	BA356C/07/xx/07.06
06/2005	5.7	Improvement ■ Stack overflow eliminated ■ FE-C valve control corrected ■ RTC properly dealt with when setting/reading the time	-
07/2004	5.6	Extension ■ Range of adjustment for delay to sample to 999s ■ Range of adjustment for cleaning duration to 300s ■ Range of adjustment for frequencies to 5800 Hz ■ Factory settings accepted as specified ■ Altered measuring cycles for AM-D, AL-A (like hardness)	BA353C/07/xx/09.04 BA357C/07/xx/10.04

Date	Version	Changes in the software	Documentation
05/2004	5.5	Extension/improvement ■ Longer initialization ■ Altered measuring cycle for SI ■ Shortened reaction time, AM-C (90 s) ■ SI-A: 0 Hz signal error only after 90 s ■ Reason for crashing during frequency display in SERVICE eliminated ■ Restart after power failure	BA364C/07/xx/06.04
03/2004	5.4	Extension/improvement ■ New process: HA ■ Menu extension: Cell drain time ■ Calibration valve off during reaction ■ Hungarian and Spanish no longer available ■ New hardness engineering units ■ New standard parameters/factory settings ■ Stepping motor activation corrected	BA361C/07/xx/02.04
08/2003	5.3	Improvement ■ Fault elimination for measuring range switchover, HA	-
08/2003	5.2	Extension/improvement ■ Factory settings for SI changed ■ CL characteristic changed ■ New startup message ■ Fault elimination for output for current output, two-channel	-
05/2003	5.1	Extension/improvement ■ New parameter CL ■ Memory correction ■ Time for "Delay to sample" is used for zero measurement ■ Factory settings for MN, SI, HA changed	BA354C/07/07.03
12/2002	5.0	Original software	BA353C/07/xx/01.03 BA355C/07/xx/01.03 BA356C/07/xx/01.03 BA357C/07/xx/01.03 BA358C/07/xx/01.03 BA359C/07/xx/01.03 BA360C/07/xx/01.03 BA361C/07/xx/01.03 BA362C/07/xx/01.03 BA363C/07/xx/01.03 BA364C/07/xx/07.03

9.4 Return

If the analyzer requires repair, please send it *cleaned* to your sales center.
Please use the original packaging when returning the device.

Please enclose the completed "Declaration of Contamination and Cleaning" form (copy the second last page of these Operating Instructions) with the packaging and also the shipping documents. The unit cannot be repaired if this declaration is not duly completed!

9.5 Disposal

Electronic components are used in the product. For this reason, the product must be disposed of as electronic waste.
Please observe local regulations.

10 Technical data

10.1 Input

Measured variable	Free available or total Cl_2 [mg/l]
Measuring range	■ CL-A+B 0.01 to 1.00 mg/l ■ CL-C+D 0.10 to 10.00 mg/l
Wave length	555 nm
Reference wave length	880 nm (only CL-C+D)

10.2 Output

Output signal	0/4 to 20 mA
Signal on alarm	Contacts: 2 limit contactors (per channel), 1 collection alarm contact Optionally: end of measurement (with two channel version, display of channel no. available)
Load	Max. 500 Ω
Data interface	RS 232 C
Load capacity	230 V / 115 V AC max. 2 A, 30 V DC max. 1 A

10.3 Power supply

Supply voltage	115 V AC / 230 V AC ±10%, 50/60 Hz
Power consumption	Approx. 50 VA
Current consumption	Approx. 0.2 A at 230 V Approx. 0.5 A at 115 V
Fuses	1 x slow-blow 0.5 A for analyzer electronics 2 x semi-delay 0.2 A for photometer

10.4 Performance characteristics

Time between two measurements	t_{meas} = reaction time + rinse time + waiting time + post rinse time + filling time+delay to sample + reject reagent (min. waiting time = 0 min)
Maximum measured error	±2 % of end of measuring range
Measuring interval	t_{meas} ... 120 min
Reaction time	■ 1 minute
Sample requirement	■ 15 ml (0.51 fl.oz.) / measurement
Reagent requirement	CL-A/B: 2 x 0.56 ml (0.019 fl.oz.) CL-C/D: 2 x 0.30 ml (0.01 fl.oz.) 2 x 2.6 l (0.69 gal.) (CL-A/B) or 2 x 1.3 l (0.34 gal.) (CL-C/D) reagents per month
Calibration interval	0 to 720 h
Flushing interval	0 to 720 h
Rinse time	Selectable from 20 to 300 s (standard = 60 s)
Post rinse time	30 s

Filling time	20 s
Maintenance interval	6 months (typically)
Servicing requirements	15 minutes / week (typically)

10.5 Environment

Ambient temperature range	5 to 40 °C (40 to 100 °F), severe fluctuations must be avoided
Humidity	Below the condensation limit, installation in usual, clean rooms Outdoor installation only possible with protective devices (customer-supplied)
Degree of protection	IP 43

10.6 Process

Sample temperature	5 to 40 °C (40 to 100 °F)
Sample flow rate	Min. 5 ml/min (0.0013 gal/min)
Consistency of the sample	Low solid content (dry matter < 50 mg/l (ppm))
Sample inlet	Unpressurized

10.7 Mechanical construction

Design, dimensions	See chapter "Installation"	
Weight	GFR housing Stainless steel housing Without housing	Approx. 28 kg (62 lbs) Approx. 33 kg (73 lbs) Approx. 25 kg (55 lbs)
Materials	Housing Front windows Endless hose Pump hose Valves	Stainless steel 1.4301 (AISI 304) or GFR Polycarbonate C-Flex®, Norprene® Tygon®, Viton® Tygon®, silicone

11 Appendix

11.1 Operating matrix

One-channel version

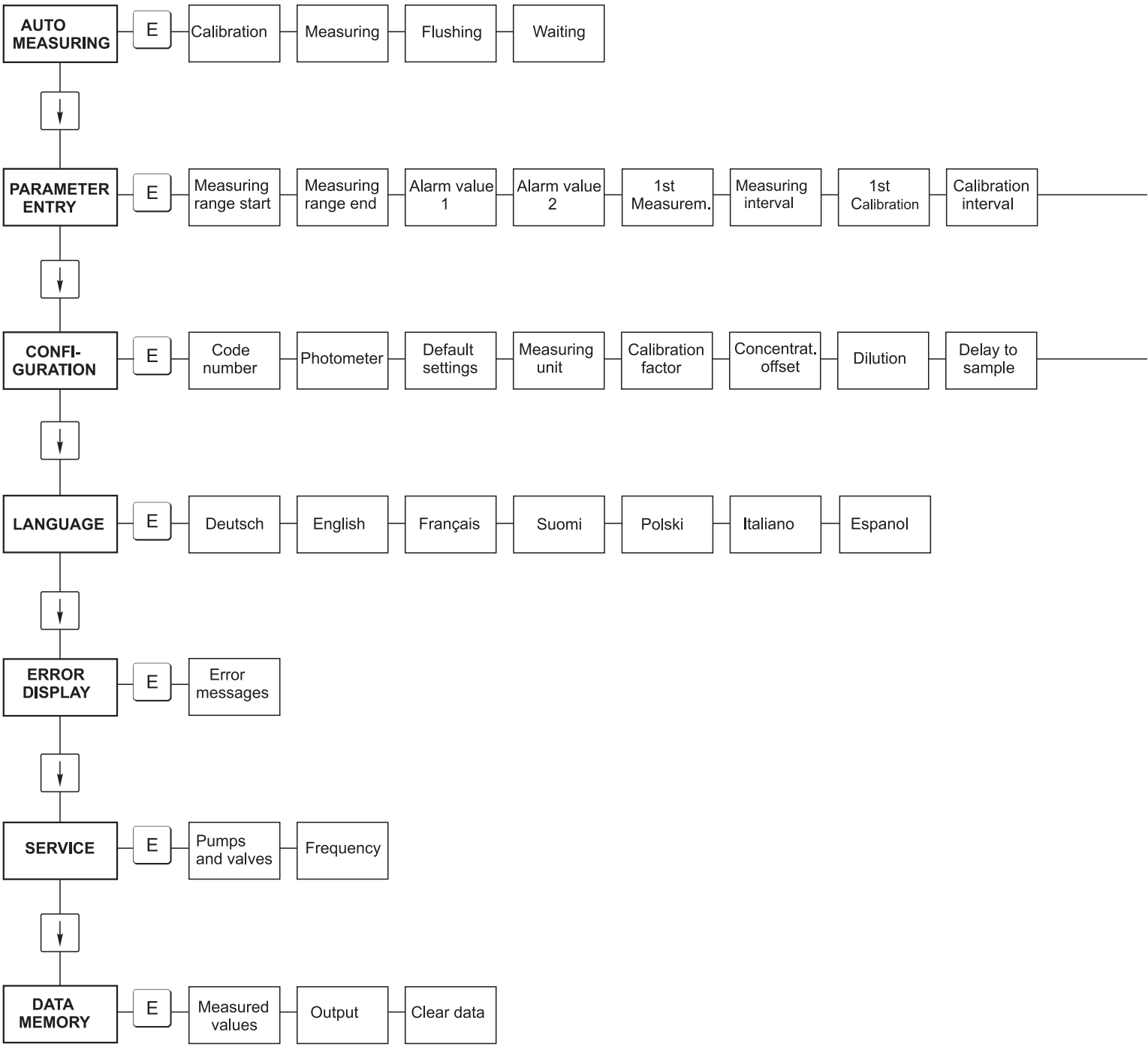

a0001907-en

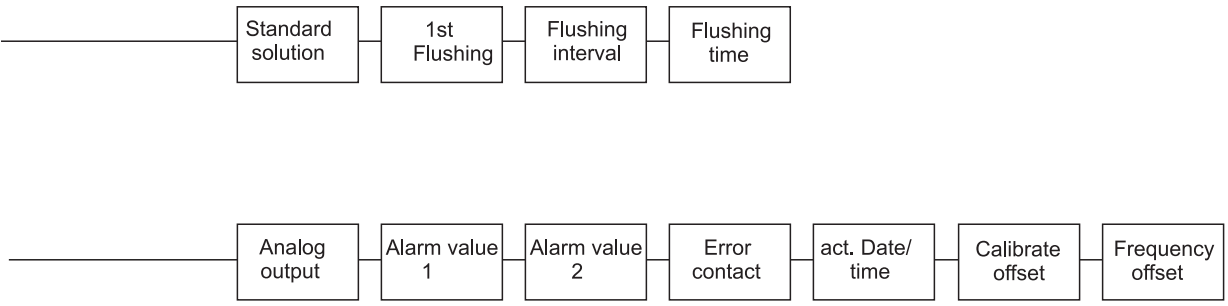
Standard solution
1st Flushing
Flushing interval
Flushing time
Analog output
Alarm value 1
Alarm value 2
Error contact
act. Date/ time
Calibrate offset
Frequency offset

a0001908-en

Two-channel version

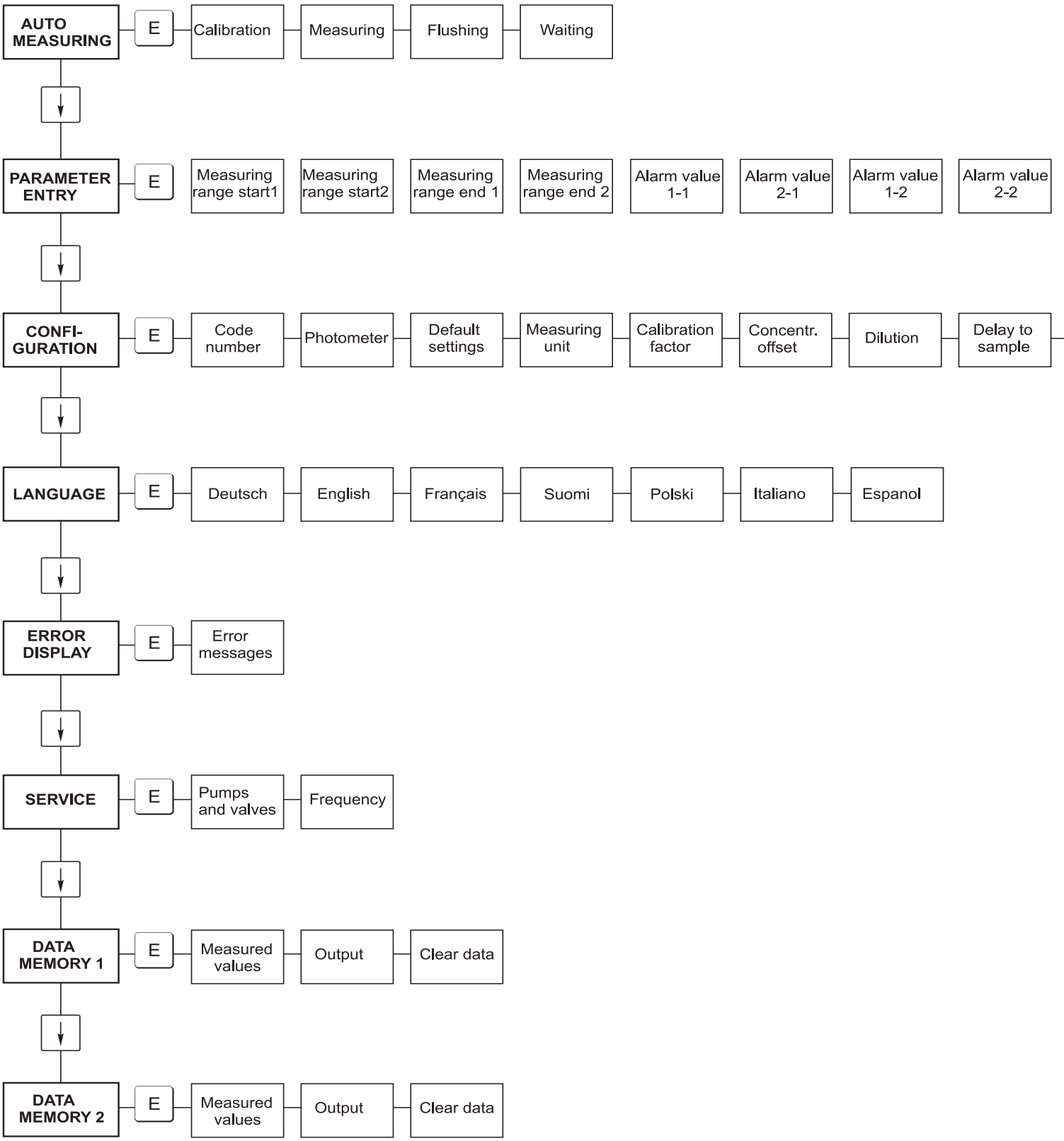

a0001909-en

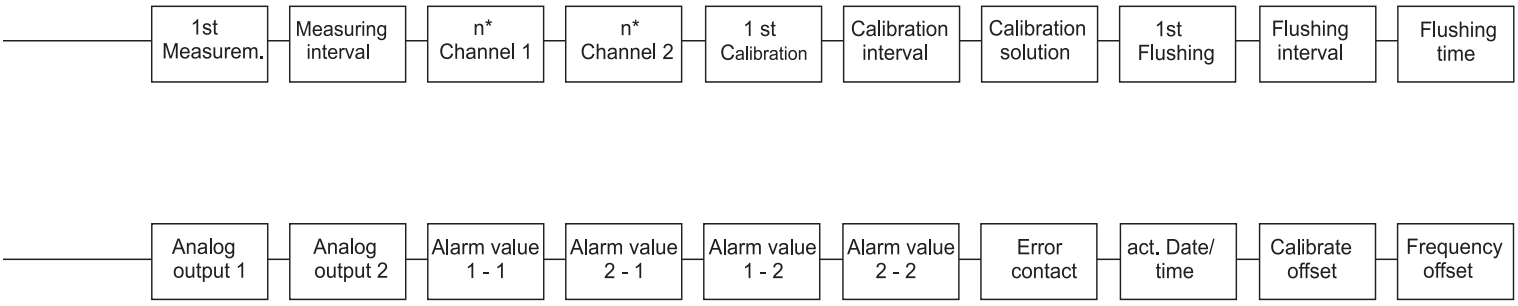
1st Measurem.
Measuring interval
n* Channel 1
n* Channel 2
1 st Calibration
Calibration interval
Calibration solution
1st Flushing
Flushing interval
Flushing time
Analog output 1
Analog output 2
Alarm value 1 - 1
Alarm value 2 - 1
Alarm value 1 - 2
Alarm value 2 - 2
Error contact
act. Date/ time
Calibrate offset
Frequency offset

a0001910-en

11.2 Ordering forms

11.2.1 Reagents and accessories

To Fax No:	
Fax for ordering reagents	
To (address of your sales center)	**From** (billing address) Company: Re: Street: Zip code / Town: Fax / Telephone:
Address for delivery (if not the above address) Company / Name: Street / Zip code / Town:	

Quantity	**Article**	**Designation**
	CAV740-1A	Maintenance kit CA 7X ■ 1 set of pump hoses, yellow/blue (12 piece) ■ 1 set of pump hoses, black/black (12 piece) ■ 1 pack of hose connectors each, item 130, 131, 132, 133, 134 (10 pieces each) ■ C-Flex hose for valves 1.40 m

Quantity	**Article**	**Designation**
	CAV740-4A	Maintenance kit CA 7X ■ 1 set of pump hoses, violet/white (12 piece) ■ 1 set of pump hoses, black/black (12 piece) ■ 1 pack of hose connectors each, item 130, 131, 132, 133, 134 (10 pieces each)

Quantity	**Order No.**	**Designation**
	CAY543-V10AAE	Reagent set, free available chlorine, active, 1 l CL1+CL2 each
	CAY543-V10AAH	Reagent set, free available chlorine, inactive, 1 l CL1+CL2 each
	CAY546-V10AAE	Reagent set, total chlorine, active, 1 l CL1+CL2 each
	CAY546-V10AAH	Reagent set, total chlorine, inactive, 1 l CL1+CL2 each
	CAY544-V10AAE	Cleaner, 1 l

Chemicals for ultrafiltration		
Quantity	**Order No.**	**Designation**
	CAY746-V01AAE	Alkaline cleaner P3-Ultrasil 130, 100 ml
	CAY746-V10AAE	Alkaline cleaner P3-Ultrasil 130, 1 l
	CAY746-V50AAE	Alkaline cleaner P3-Ultrasil T130, 5 l
	CAY747-V01AAE	Acidic cleaner P3-Ultrasil 130, 100 ml
	CAY747-V10AAE	Acidic cleaner P3-Ultrasil 130, 1 l
	CAY747-V50AAE	Acidic cleaner P3-Ultrasil 130, 5 l

Place Date Stamp/Signature

Earliest delivery one week after order received. Delivery is unpaid.

11.2.2 Ordering wear parts

To Fax No:	
Fax for ordering wear parts	
To (address of your sales center)	**From** (billing address) Company: Re: Street: Zip code / Town: Fax / Telephone:
Address for delivery (if not the above address) Company / Name: Street / Zip code / Town:	

Quantity	Item	Pieces/pack.	Designation	Order number
	110	12	Tygon pump hose, yellow/blue	51506434
	111	12	Tygon pump hose, black/black	51506437
	113	12	Tygon pump hose, violet/white	51508945
	120	15 m	Norprene hose, ID 1.6 mm	51504116
	121	7.5 m	C-Flex hose, ID 3.2 mm (permeate inlet and overflow with sample collector.)	51504114
	122	7.5 m	C-Flex hose, ID 6.4 mm	51504115
	123	1 m (3.28 ft)	C-Flex hose, ID 1.5 mm	51512535
	130	10	Hose connector, 1.6 mm x 1.6 mm	51506495
	131	10	T-hose connector, 1.6 mm x 1.6 mm x 1.6 mm	51506490
	132	10	Hose connector 3.2 mm x 3.2 mm	51506491
		10	T-hose connector 6.4 mm x 6.4 mm x 6.4 mm	51506493
		10	Hose connector 6.4 mm x 6.4 mm	51506494
	133	10	Hose connector 3.2 mm x 6.4 mm	51506492
	134	10	Y-hose connector 1.6 mm x 1.6 mm x 1.6 mm	51512096
	135	10	Connection nipples for sample collector (10 piece)	51512099
	144	1	Photometer cell – CL-A+B – CL-C+D	 51513566 51505776
	155	1	Valve set for two-channel version	51512234
	160	1	Roller head with holder for hose pump	51512085
	161	1	Hose box for pump	51512086
	170	1	Collecting vessel with level monitoring	51512089
	171	1	Collecting vessel without level monitoring	51512088
	200	1	Photometer type[1]:	
		1	Silicone spray	51504155
		1	Cleaning injector	51503943
		1	CA71 kit, complete valve, for one-channel version	51512100
		2	CA71 kit, complete valve set, for two-channel version	51512234
		1	CA71 kit, level monitoring, retrofitting for collecting vessel	71023419

1) Please take the designation and the Order No. from the "Troubleshooting/Spare parts" section and enter them here!

Place Date Stamp/Signature

Earliest delivery one week after order received. Delivery is unpaid.

11.3 Analyzer settings

Place:
Type:
Analyzer serial No.:
Photometer serial No.:
Software version:
Date:

Photometer type:				
Measuring unit:				
Calibration factor:				
C-offset:			■ mg/l	■ µg/l
Dilution:				
Delay to sample:			s	
Analog output:	■ 0-20 mA	■ 4-20 mA		
AV 1:	■ NC	■ NO		
AV 2:	■ NC	■ NO		
Error contact:	■ NC	■ NO		
Frequency offset:			Hz	
Zero frequency base line: (dist. water without reagent)			Hz	
Measuring range start:			■ mg/l	■ µg/l
Measuring range end:			■ mg/l	■ µg/l
AV 1:			■ mg/l	■ µg/l
AV 2:			■ mg/l	■ µg/l
1. measurement:				
Measuring interval:			Min	
1. calibration:				
Calibration interval:			h	
Calibration solution:			■ mg/l	■ µg/l
1. flushing:				
Flushing interval:			h	
Flushing hold on:			s	

Submenu			
Error mask:			
MB >:			
MBE:			
Post rinsing:			
Filling time:			
Reaction time:			
RPM:			
K floating mean:			
N:		Points	
C1:	mg/l / µg/l	F 1:	Hz
C2:	mg/l / µg/l	F 2:	Hz
C3:	mg/l / µg/l	F 3:	Hz
C4:	mg/l / µg/l	F 4:	Hz
C5:	mg/l / µg/l	F 5:	Hz
C6:	mg/l / µg/l	F 6:	Hz
C7:	mg/l / µg/l	F 7:	Hz
C8:	mg/l / µg/l	F 8:	Hz
C9:	mg/l / µg/l	F 9:	Hz
C10:	mg/l / µg/l	F 10:	Hz

Date: Service technician:

11.4 Maintenance schedule

Maintenance schedule for analyser no. .....

weekly

→ Check and note calibration factor
→ Visual check (soiling, pump tubings, reagent, sample inlet etc.)
→ Move hoses in the valves, change position due to valve pressure, spray hoses with silicone spray

done	cw 1	cw 2	cw 3	cw 4	cw 5	cw 6	cw 7	cw 8	cw 9	cw 10	cw 11	cw 12
date												
done	cw 13	cw 14	cw 15	cw 16	cw 17	cw 18	cw 19	cw 20	cw 21	cw 22	cw 23	cw 24
date												
done	cw 25	cw 26	cw 27	cw 28	cw 29	cw 30	cw 31	cw 32	cw 33	cw 34	cw 35	cw 36
date												
done	cw 37	cw 38	cw 39	cw 40	cw 41	cw 42	cw 43	cw 44	cw 45	cw 46	cw 47	cw 48
date												
done	cw 49	cw 50	cw 51	cw 52	cw 53							
date												

2-weekly

→ Check concentration of the calibration factor in the laboratory.
If necessary, adjust concentration in the menu parameter entry or use new standard.
→ Flush sample tubing system with pressurised water (disposable syringe). Remove hose holder unit from the pump.

done	cw 1	cw 3	cw 5	cw 7	cw 9	cw 11	cw 13	cw 15	cw 17	cw 19	cw 21	cw 23
date												
done	cw 25	cw 27	cw 29	cw 31	cw 33	cw 35	cw 37	cw 39	cw 41	cw 43	cw 45	cw 47
date												
done	cw 49	cw 51	cw 53									
date												

monthly or if required

→ Replace reagents.
→ Flush the sample tubing system with 12.5% bleaching lye (sodium hypochloride) and reflush thoroughly with water (menu Service V1: P, P1: g, P2: s, V2: S, (two channel version also V3))
→ Check sample collector for fouling and clean it if necessary
→ Spray pump hoses with silicone spray.

done	Jan	Feb	Mar	Apr	May	Jun	Jul	Aug	Sep	Oct	Nov	Dec
date												

every 3rd month / every 6th month

→ Turn the pump hoses in the hose holder unit **(monthly)**, replace them **(every 6th month)**
Attention: *Whenever working on the reagent hoses, the hoses must be removed from the canisters and the T-connectors near the reagent pump to prevent contamination of the reagents.*
→ Clean drain lines

done	Jan	Feb	Mar	Apr	May	Jun	Jul	Aug	Sep	Oct	Nov	Dec
date												

a0001911-en

Index

A
Accessories 41
Alarm values 25–26
Analog output 25
Analyzer at a glance 8
Auto measuring 23

C
Calibration 29
Calibration factor 24
Calibration interval 26
Cell 39
Check
  Electrical connection 21
  Function 31
  Post-installation 14
Cleaners 41
Cleaning 40
Collecting vessel 41
Commissioning 4, 31
Concentration offset 24
CONFIGURATION 24
Connection
  Signals 18
  Switching contacts 19
Contacts 19

D
DATA MEMORY 28
Declaration of conformity 7
Designated use 4
Dilution module 32, 41
Display 22

E
Electrical connection 15
Electrical technician 15
Environment 49
ERROR DISPLAY 27
Errors 43

F
Faults 43
Flushing interval 27
Frequency offset 25

G
GFR housing 10

H
Housing
  GFR 10
  Stainless steel 9
  Without 10

I
Icons 5
Incoming acceptance 9
Input 48
Installation 4, 8
  Examples 14
Installation instructions 9, 12
Interference suppressor 18, 42

L
LANGUAGE 27
Level monitoring 12

M
Main menu 23
Maintenance 35
Maintenance kit 41
Maintenance schedule 35
Measuring unit 24
Mechanical construction 49
Menu
  Auto measuring 23
  Configuration 24
  Data memory 28
  Error display 27
  Language 27
  Main menu 23
  Parameter 26
  Service 28
Mixer 39

N
Nameplate 6
Notes on safety conventions and icons 5

O
Offset
  Concentration 24
  Frequency 25
Open version 10
Operation 4, 22
Operational safety 4
Ordering 6
Output 48
Overview of analyzer 8

P
PARAMETER ENTRY 26
Performance characteristics 48
Photometer cell 39
Placing out of service 40
Post-connection check 21
Post-installation 14
Power supply 48
Process 49
Product structure 6
Pumps 28

Q

Quality certificate 7

R

Reaching the terminal block. 15
Reagents 36, 41
Replacing
Photometer cell 39
Pump hoses 36
Reagents 36
Static mixer 39
Valve hoses 38
Return. 4, 47

S

Safety conventions. 5
Scope of delivery 7
Serial interface. 20
SERVICE. 28
Shielding. 18
Signal connections. 18
Software history 46
Spare parts 45
Stainless steel housing 9
Standard solutions 41
Static mixer. 39
Storage 9
Switching contacts. 19
Switching on 31

T

Technical data. 48–49
Transport 9

U

Use 4

V

Valve hoses 38
Valves 28

Endress+Hauser

People for Process Automation

Declaration of Hazardous Material and De-Contamination

Erklärung zur Kontamination und Reinigung

RA No. ☐☐☐☐☐☐☐

Please reference the Return Authorization Number (RA#), obtained from Endress+Hauser, on all paperwork and mark the RA# clearly on the outside of the box. If this procedure is not followed, it may result in the refusal of the package at our facility.
Bitte geben Sie die von E+H mitgeteilte Rücklieferungsnummer (RA#) auf allen Lieferpapieren an und vermerken Sie diese auch außen auf der Verpackung. Nichtbeachtung dieser Anweisung führt zur Ablehnung ihrer Lieferung.

Because of legal regulations and for the safety of our employees and operating equipment, we need the "Declaration of Hazardous Material and De-Contamination", with your signature, before your order can be handled. Please make absolutely sure to attach it to the outside of the packaging.
Aufgrund der gesetzlichen Vorschriften und zum Schutz unserer Mitarbeiter und Betriebseinrichtungen, benötigen wir die unterschriebene "Erklärung zur Kontamination und Reinigung", bevor Ihr Auftrag bearbeitet werden kann. Bringen Sie diese unbedingt außen an der Verpackung an.

Type of instrument / sensor
Geräte-/Sensortyp _____

Serial number
Seriennummer _____

☐ **Used as SIL device in a Safety Instrumented System /** *Einsatz als SIL Gerät in Schutzeinrichtungen*

Process data/ *Prozessdaten*

Temperature / *Temperatur* _____ [°F] _____ [°C]
Pressure / *Druck* _____ [psi] _____ [Pa]
Conductivity / *Leitfähigkeit* _____ [µS/cm]
Viscosity / *Viskosität* _____ [cp] _____ [mm²/s]

Medium and warnings
Warnhinweise zum Medium

	Medium /concentration *Medium /Konzentration*	Identification CAS No.	flammable *entzündlich*	toxic *giftig*	corrosive *ätzend*	harmful/ irritant *gesundheits-schädlich/ reizend*	other * *sonstiges**	harmless *unbedenklich*
Process medium / *Medium im Prozess*								
Medium for process cleaning / *Medium zur Prozessreinigung*								
Returned part cleaned with / *Medium zur Endreinigung*								

* explosive; oxidising; dangerous for the environment; biological risk; radioactive
* *explosiv; brandfördernd; umweltgefährlich; biogefährlich; radioaktiv*

Please tick should one of the above be applicable, include safety data sheet and, if necessary, special handling instructions.
Zutreffendes ankreuzen; trifft einer der Warnhinweise zu, Sicherheitsdatenblatt und ggf. spezielle Handhabungsvorschriften beilegen.

Description of failure / *Fehlerbeschreibung* _____

Company data / *Angaben zum Absender*

Company / *Firma* _____
Address / *Adresse* _____
Phone number of contact person / *Telefon-Nr. Ansprechpartner:* _____
Fax / E-Mail _____
Your order No. / *Ihre Auftragsnr.* _____

"We hereby certify that this declaration is filled out truthfully and completely to the best of our knowledge.We further certify that the returned parts have been carefully cleaned. To the best of our knowledge they are free of any residues in dangerous quantities."
"Wir bestätigen, die vorliegende Erklärung nach unserem besten Wissen wahrheitsgetreu und vollständig ausgefüllt zu haben. Wir bestätigen weiter, dass die zurückgesandten Teile sorgfältig gereinigt wurden und nach unserem besten Wissen frei von Rückständen in gefahrbringender Menge sind."

(place, date / *Ort, Datum)* _____ Name, dept./*Abt.* (please print / *bitte Druckschrift*) _____ Signature / *Unterschrift* _____

www.endress.com/worldwide

Endress+Hauser

People for Process Automation

BA354C/07/en/10.06
Printed in Germany / FM+SGML 6.0 / DT

51512312