Technical Information
Liquiline M CM42

Memosens: pH/ORP, oxygen, conductivity
Analog sensors: pH/ORP, conductivity, concentration, resistivity

Two-wire transmitter for Ex and non-Ex areas

Application

Liquiline M CM42 is a modular two-wire transmitter for all areas of process engineering.
Depending on the version ordered, Liquiline has one or two analog current outputs. In addition, it can be connected to fieldbuses in accordance with the FOUNDATION Fieldbus, PROFIBUS PA and HART protocol.
The transmitter is suitable for pollution degree 3.

The highly robust plastic version and the hygienic stainless steel version are tailored to the following applications:
- Chemical processes
- Pharmaceuticals industry
- Foodstuff technology
- Applications in hazardous areas

Your benefits

- Cost-saving:
  - Simple commissioning with Quick Setup and Navigator
  - Memosens: Plug & play laboratory-calibrated sensors
  - Predictive maintenance system detects when a sensor needs to be cleaned, calibrated or replaced.
  - Less storage thanks to modular design
  - Effective asset management using FieldCare and W@M
- Safe:
  - Memosens: Active display of cable interruption
  - User-guided commissioning, graphic display and plain text guidance for maximum operating safety
  - Approvals: ATEX, FM, CSA, NEPSI, TIIS
  - User administration: Code-protected commissioning
  - pH glass with Memosens: SIL2 measuring point with TÜV approval

Endress+Hauser
People for Process Automation

Table of contents

Function and system design 3
Measuring system 3

Equipment architecture 4
Software 4
DAT memory modules 5
Suitable sensors 5

Dependability 5
Reliability 5
Maintainability 7
Safety 7

Input 8
Measured variables 8
Measuring ranges 8
Binary input (Memosens): pH/ORP, oxygen, conductivity 8
Analog input: pH / ORP 9
Analog input: Conductivity 10

Output 11
Output signal 11
Signal on alarm 11
Load 11
Output signal range 11
Ex specification current output 11
Ex specification PROFIBUS and FOUNDATION Fieldbus 12

Protocol-specific data 12
HART 12
PROFIBUS PA 12
FOUNDATION Fieldbus 12

Current output, passive 13
Span 13
Signal characteristics 13
Cable specification 13

Power supply 13
Supply voltage 13
Cable specification 13
Grounding the housing 14
Supply and signal voltage 15
Sensor connection 17
Sensor connection: Memosens sensors 18
Sensor connection: analog pH/ORP sensors 19
Sensor connection: analog conductivity sensors 23

Performance characteristics 24
Reference temperature 24
Current output response time 24
Memosens measured error 24
Tolerance, current outputs 24
Repeatability 24
Temperature compensation conductivity 24
Temperature adjustment 25

Installation 25
Wall securing plate 25
Weather protection cover 25
Installation options 26
Installation in Ex area 27

Environment 29
Ambient temperature range 29
Storage temperature 29
Electromagnetic compatibility 29
Degree of protection 29
Relative humidity 29
Pollution degree 29

Mechanical construction 29
Dimensions 29
Weight 30
Material 30

Operability 31
Operation concept 31
Display characteristics 31
Operating elements 31

Ordering information 32
Product page 32
Product configurator 32
Scope of delivery 32

Certificates and approvals 32
CE mark 32
Ex approval 32

Accessories 33
Mounting kits 33
Weather protection cover 33
Active barrier 33
Fieldbus accessories 33
Measuring cable 34
Sensors 34
Software update and upgrade 37

Function and system design

Measuring system

A complete measuring system consists of:
- Liquiline M CM42 transmitter with mounting plate (e.g. for wall mounting)
- sensor and suitable sensor cable
- assembly suitable for the sensor (optional)
- post retainer (optional)
- weather protection cover (optional)

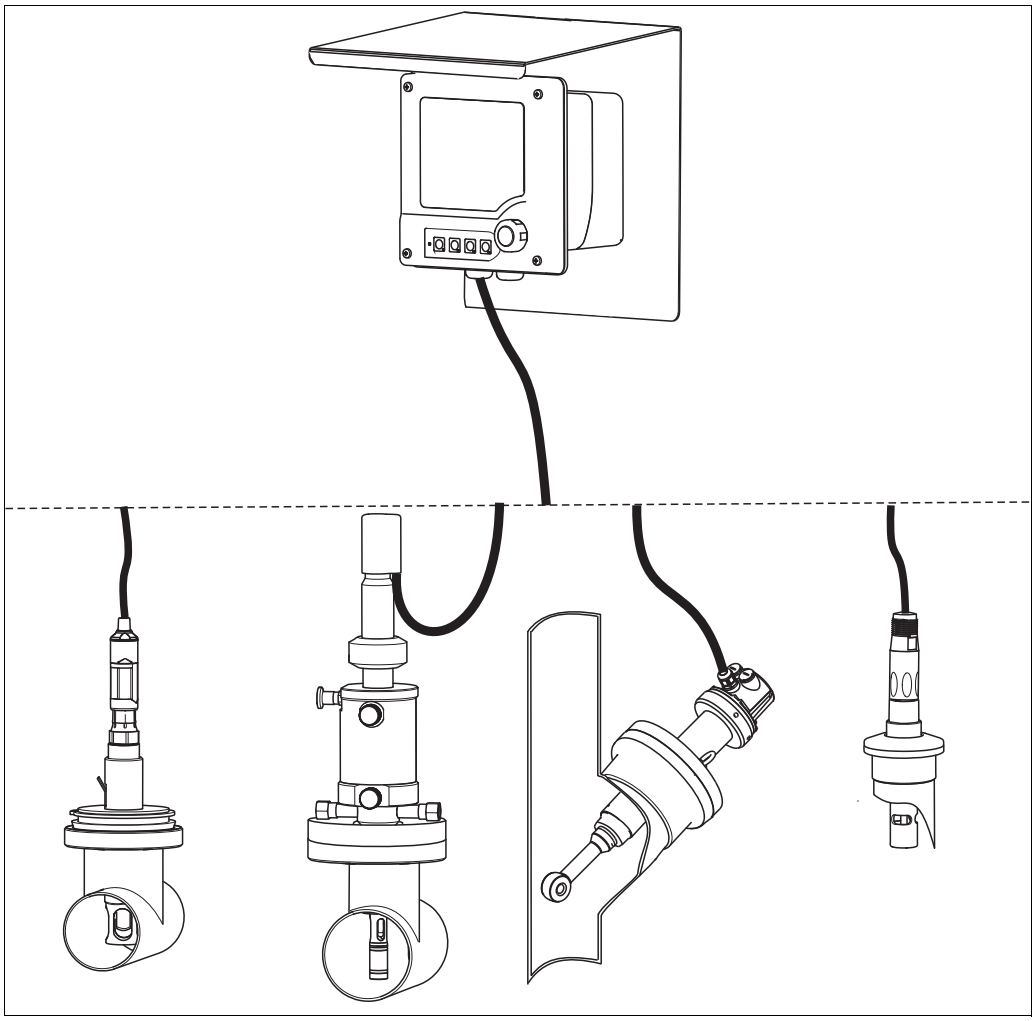

a0002012

Examples of a measuring system

pH / ORP (analog)
- CM42-P...
- Measuring cable CPK9
- Cleanfit CPA471 assembly
- Orbisint CPS11 sensor

Conductivity, inductive measurement (analog)
- CM42-I...
- Dipfit CLA111 assembly
- Indumax CLS50 sensor

Conductivity, conductive measurement (analog)
- CM42-C...
- Measuring cable CPK9
- Condumax CLS16 sensor

Memosens (digital)
- CM42-K/L/M/N/O...
- Measuring cable CYK10
- (Unifit CPA442 assembly)
- Sensor [1)]

[1)] CPS11D (pH glass), CPS471D (pH ISFET), CPS16D (pH/ORP combined), CPS341D (enamel pH), COS22D/COS51D (DO), CLS15D/CLS16D/CLS21D (LFc), CLS50D (LFi)

You can combine your measuring point with a range of assemblies and sensors. Details can be found in the "Accessories" section and in the documentation listed there. For additional information, see www.endress.com/cm42

NOTICE

Effect of climatic conditions: rain, snow, direct sun

Impaired operation to complete transmitter failure

▸ When installing outside, always use the weather protection cover (see accessories).

Equipment architecture

Software

You can choose from the following software packages:
- Standard:
  Standard application for the most common measuring points
- Advanced:
  Many additional functions that increase safety and quality

Package	Features		
	pH /ORP (glass/ISFET)	**Conductivity**	**Oxygen**

Standard	**Analog sensors**
	– Offset and two-point calibration
	– Sample calibration
	– Calibration with standard buffers
	– Manual buffer specification
	– Temperature compensation
	– Temperature adjustment
	– Isotherm intersection
	– Simulation of current output
	– Self-diagnosis
	– Calibration stability settings
	– Clock
	Memosens sensors
	as for analog with the addition of:
	– Sensor information
	– Sensor check
		Analog sensors
		– Sample calibration
		– Temperature calibration: one-point
		– Temperature compensation: linear, NaCl, ultrapure water (NaCl, HCl)
		– Simulation of current output
		– Self-diagnosis
		– Concentration measurement
		– Clock
		Memosens sensors
		as for analog with the addition of:
		– Sensor information
		– Sensor check
			Memosens sensors
			– Slope calibration
			  – in air (100% rF)
			  – in water (100% air-saturated)
			  – in air (with input of current absolute air pressure and relative humidity)
			– Zero point calibration
			– Sample calibration
			– Temperature adjustment
			– Medium compensation
			– Calibration stability settings
			– Simulation of current output
			– Self-diagnosis
			– Clock
			– Sensor information
			– Sensor check

Advanced	**"Standard" software package with the addition of:**		
	Analog sensors – Medium compensation – Calibration timer – Sensor Condition Check (SCC) – Process Check System (PCS) **Memosens sensors** as for analog with the addition of: – Operated hours counter – Sterilization cnt.	**Analog sensors** – Calibration with separate installation factor (inductive measurement only) – Polarization detection (conductive measurement only) – Temperature compensation via user table – Two-point temperature adjustment: offset and slope – USP alarm and prealarm **Memosens sensors** as for analog with the addition of: – Operated hours counter – Sterilization cnt.	**Memosens sensors** – Polarization voltage setting – Calibration timer – Sensor statistics – Operated hours counter – Sterilization cnt.
	All devices, regardless of measurement parameter – Logbooks – Data logbook – Free assignment of measured values to current outputs (optional) – Switching on and off of diagnostic function – Extended user administration – Current output tables		

DAT memory modules

There are 3 different types of DAT module, which can be ordered as an optional accessory or are already included in the scope of delivery:
- **SystemDAT**
  Firmware updates (newer firmware version) or change of language pack
- **FunctionDAT**
  Extended functional range ("Advanced" firmware or second current output)
- **CopyDAT**
  Memory for own configuration settings

Test the extensibility of your device

- Before ordering a FunctionDAT, check if it is possible to extend the functional range of your device.

Suitable sensors

pH/ORP

- Analog and Memosens glass electrodes
- Analog and Memosens ISFET sensors
- Analog and Memosens ORP sensors
- Memosens pH/ORP combined sensors
- Analog and Memosens enamel pH electrodes
- Analog single electrodes (glass or antimony)

Conductivity

- Analog and Memosens, conductive sensors
  - Two-electrode sensors
  - Four-electrode sensors
- Analog and Memosens, inductive sensors

Oxygen

Amperometric sensors:
- with Memosens technology
- 12 and 40 mm design

Dependability

Reliability

Memosens

Memosens makes your measuring point safer:
- No-contact, digital signal transmission allows optimum galvanic isolation
- No contact corrosion
- Completely watertight
- Sensors can be calibrated in a lab, which increases the availability of measured values
- Predictive maintenance thanks to recording of sensor data, e.g.:
  - Total hours of operation
  - Hours of operation with very high or very low measured values
  - Operating hours at high temperatures
  - Number of steam sterilizations
  - Sensor status

Quick Setup

To the first measured value within 1 minute
Once you have set up the few parameters in the Quick Setup menu, the measuring point is ready to measure. The first measured value is reliably displayed.

Process Check System (PCS): Life check

This function is used to check the measuring signal for stagnation. An alarm is triggered if the measuring signal does not change over a certain period (several measured values). The reason for such behavior can be contamination, clogging or similar.

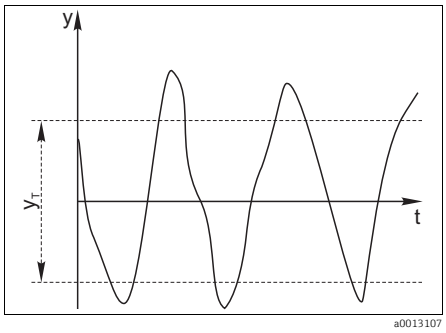

Normal measuring signal, no alarm

y *Measuring signal*
y_T *Minimum signal fluctuation*

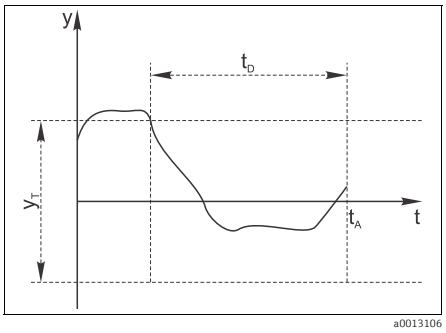

Stagnating signal, alarm is triggered

t_D *Specified time interval*
t_A *Time at which the alarm is triggered*

Sensor Condition Check (SCC, pH only)

This function monitors the electrode status and the degree of electrode aging. The status is displayed with the messages "SCC electrode condition bad" or "SCC electrode condition sufficient". The status of the electrode is updated after every calibration.

Sensor Check System (SCS, pH only)

The Sensor Check System monitors the pH glass resistance or reference resistance (for analog and combined sensors only), thus indicating possible incorrect measurements that may occur as a result of damage to or clogging of the pH electrode.
In addition, the SCS detects glass breakage in the case of classic glass electrodes as well as leaks in the case of ISFET sensors.

Polarization monitoring (conductivity only, conductively measured)

Polarization effects in the boundary layer between the sensor and the measuring solution limit the measuring range of conductive conductivity sensors.
The transmitter can detect and report polarization effects using an intelligent signal evaluation process.

United States Pharmacopeia, USP and European Pharmacopeia, EP (conductivity only)

The requirements for ultrapure water in the pharmaceutical industry are determined primarily by the American USP and European EP.

The transmitter complies with USP/EP requirements for conductivity measuring systems:
- Exact temperature measurement at the place of conductivity measurement
- Simultaneous display of uncompensated conductivity values and temperature is possible
- Display resolution 0.01 µS/cm
- Exact factory calibration of the transmitter with traceable precision resistance (optional)
- Exact adjustment of sensors in the factory as per ASTM D 1125–91 or ASTM D 5391–99 (optional)
- Temperature-dependent measured value monitoring as per USP and EP.

The limit functions for pharmaceutical water are implemented in the "Advanced" software package in accordance with USP and EP: For conductivity measurements, the limit functions for pharmaceutical water are implemented in the software in accordance with USP and EP:
- Water for Injection (WFI) as per USP <645> and EP
- Highly purified water (HPW) as per EP
- Purified water (PW) as per EP

The uncompensated conductivity value and the temperature are measured for the USP/EP limit functions. The measured values are compared with the tables set down in the standards. An alarm is triggered if the limit value is exceeded. In addition, a prealarm can be set that flags undesirable operating statuses before they occur.

Application-optimized calibration models (oxygen)

In separate functions, the transmitter allows process-adjusted zero point sensor calibration or sensor calibration via the slope.
There are different calibration models for this, ranging from simple slope calibration in air that is saturated with water vapor to slope calibration with input of the absolute air pressure and relative humidity at the measuring location.
The latter model allows in-process calibration during operation as well as during sterilization and cleaning.
The number of calibrations and sterilizations are tracked separately for the sensor and membrane cap. The relevant counter can be reset if the membrane cap is replaced.

Maintainability

Modular design

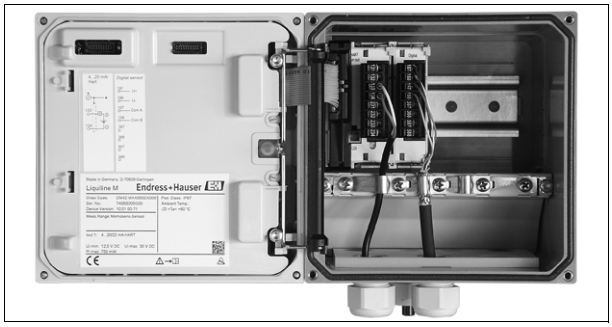

a0010477

Interior of Liquiline (version with sensor module)

a0010476

Plug-in modules

Sensor monitor ("Advanced" only)

You will find the sensor monitor in the DIAG menu. Important sensor data incl. warning and alarm limits are displayed either graphically or numerically.

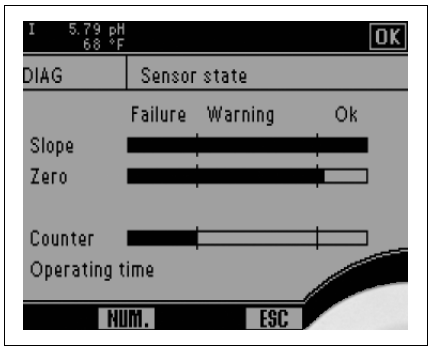

a0010474

Sensor monitor, graphical display (example)

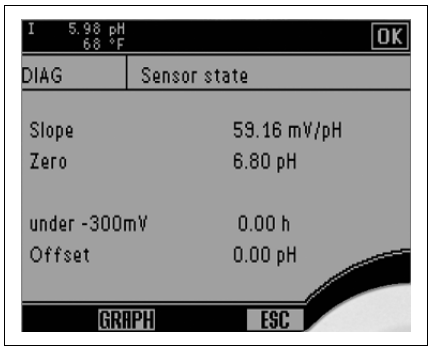

a0014566

Sensor monitor, numerical display (example)

Safety

User administration ("Advanced" only)

To avoid unscheduled changes to the measuring point, the device features a user administration function.
You need to log on as an Expert to switch on the user administration function. The first time you log onto the device, you will therefore be asked to enter a password (the "Admin" user name is already entered).

The user administration function makes two different modes available in the Advanced version:

Roles
- There are 3 fixed user roles (Expert, Maintenance, Operator).
- "Experts" always have all the rights. "Operator" is the role with the least amount of rights.
- Each role has its own individual password. This password can be changed.
- No other user roles can be created.

User accounts

- You can create and manage a maximum of 15 user accounts.
- You need to be logged on as an "Expert" to be able to manage accounts.
- In each user account you specify the user name and the password and assign the new user one of 3 user roles (Operator, Maintenance and Expert).
- Multiple user accounts with the "Expert" role are possible.

SIL

A TÜV-approved SIL2 version of the Liquiline M CM42 is also available (CM42-M* only, without HART).

Safety functions

- Safe output of the digitized value at the current output
- Monitoring of the measured value for leaving a defined interval
- Safe calibration and adjustment

Additional information and Safety Manuals can be found at:
www.endress.com/SIL

Input

Measured variables

--> Documentation of the connected sensor

Measuring ranges

--> Documentation of the connected sensor

Binary input (Memosens): pH/ORP, oxygen, conductivity

Cable specification

CYK10, CYK20 with Memosens	Max. cable length 100 m (330 ft)
Fixed cable with Memosens (CLS50D, CLS54D)	Max. cable length 100 m (330 ft)

Ex specification

Intrinsically safe sensor circuit with protection type: Ex ia IIC[1] or Ex ic IIC[2] or Ex ib IIC[3]	
Max. output voltage U_o	5.04 V
Max. output current I_o	80 mA
Max. output P_o	112 mW
Max. external inductance L_o	2 µH
Max. external capacitance C_o	55 µF

1) CM42-*G*********, CM42-*E*********, CM42-*I*********, CM42-*J*********, CM42-*X*********, CM42-*Z*********

2) CM42-*V*********, CM42-*F*********

3) CM42-*T*********

Analog input: pH / ORP

Cable specification

Without SCS	Max. cable length 50 m (160 ft)
With SCS	Max. cable length 20 m (65 ft)

Applicable temperature sensors

- Pt100
- Pt1000
- NTC 30K

Ex specification

Intrinsically safe sensor circuit with protection type: Ex ia IIC[1] or Ex ic IIC[2]		
	Glass	**ISFET**
Max. output voltage U_o	10.08 V	10.08 V
Max. output current I_o	4.1 mA	50.7 mA
Max. output P_o	10.2 mW	128 mW
Max. external inductance L_o	1 mH	1 mH
Max. external capacitance C_o	250 nF	250 nF
Connection class as per NE116[3]	SensISCO1X	-

1) CM42-*G*********, CM42-*E*********, CM42-*I*********, CM42-*X*********, CM42-*Z*********

2) CM42-*V*********, CM42-*F*********

3) CM42-*G*********, CM42-*E*********, CM42-*F*********

When pH/ORP glass electrodes are connected to terminals 317, 318, 320, 111, 112 and 113, the device corresponds to connection class 1 as per NAMUR Recommendation NE116 (SensISCO). Terminals 315 and 316 may not be connected for this categorization.
The device is labeled SensISCO1X.

Input impedance

> $1*10^{12}$ Ω (under nominal operating conditions)

Input leakage current

< $1*10^{-13}$ A (under nominal operating conditions)

Analog input: Conductivity

Cable specification

Conductivity/specific resistivity, conductively measured[1)] Two-electrode sensor 10 µS·k to 20 mS·k / 0.1 MΩ/k to 50 Ω/k 5 µS·k to 20 mS·k / 0.2 MΩ/k to 50 Ω/k 0.1 µS·k to 20 mS·k / 20 MΩ/k to 50 Ω/k	 Max. cable length 100 m (330 ft) Max. cable length 50 m (160 ft) Max. cable length 15 m (50 ft)
Conductivity, measured conductively Four-electrode sensor 10 µS·k to 1.5 S·k 0.1 µS·k to 20 mS·k	 Max. cable length 100 m (330 ft) Max. cable length 15 m (50 ft)
Conductivity, measured inductively[2)]	max. cable length 55 m (180 ft) (CLS50) max. cable length 50 m (160 ft) (CLS54)

1) with cable CYK71, CPK9 or fixed cable

2) with cable CLK5, CLK6 or fixed cable

Applicable temperature sensors

- Pt100
- Pt1000

Ex specification, conductive sensors

Intrinsically safe sensor circuit with protection type: Ex ia IIC[1)] or Ex ic IIC[2)]	
Max. output voltage U_o Max. output current I_o Max. output P_o Max. external inductance L_o Max. external capacitance C_o	10.08 V 23 mA 57 mW 300 µH 50 nF

1) CM42-*G*********, CM42-*E*********, CM42-*I*********, CM42-*X*********, CM42-*Z*********

2) CM42-*V*********, CM42-*F*********

Ex specification, inductive sensors

Intrinsically safe sensor circuit with protection type: Ex ia IIC[1)] or Ex ic IIC[2)] or Ex ib IIC[3)]	
Max. output voltage U_o Max. output current I_o Max. output P_o Max. external inductance L_o Max. external conductivity C_o	10.08 V 64 mA 128 mW 0.1 mH 1.8 µF

1) CM42-*G*********, CM42-*E*********, CM42-*I*********, , CM42-*J*********, CM42-*X*********, CM42-*Z*********

2) CM42-*V*********, CM42-*F*********

3) CM42-*T*********

Output

Output signal

Current output

1x 4 to 20 mA, passive, potentially isolated against sensor circuit (Memosens only)[1)2)]
2x 4 to 20 mA, passive, potentially isolated against sensor circuit (Memosens only) and against each other [1)2)3)]

HART

Signal coding	FSK ± 0.5 mA via current signal
Data transmission rate	1200 Baud
Load (communication resistor)	250 Ω

PROFIBUS PA

Signal coding	Manchester Coding Bus Powered (MBP), compliant with IEC 61158-2
Data transmission rate	31.25 kBit/s
Bus termination	external
Connection to PROFIBUS-DP network	via segment coupler (in non-Ex mode)

FOUNDATION Fieldbus

Signal coding	Manchester Coding Bus Powered (MBP), compliant with IEC 61158-2
Data transmission rate	31.25 kBit/s
Bus termination	external

Signal on alarm

3.6 to 21.5 mA (4.0 mA fixed value in HART multidrop mode)
digitally via fieldbus[4)]

Load

Max. load with supply voltage of 24 V: 500 Ω
Max. load with supply voltage of 30 V: 750 Ω

Output signal range

3.6 to 21.5 mA

Ex specification current output

Intrinsically safe supply and signal circuits, passive	
Max. input voltage U_i	30 V
Max. input current I_i	100 mA
Max. input P_i	800 mW (all except TIIS) or 750 mW (TIIS)
Max. internal inductance L_i	29 µH (output 1) 24 µH (output 2)
Max. internal capacitance C_i	1.2 nF (output 1) 0.2 nF (output 2)

1) Potential isolation for Memosens in sensor plug
2) For inductive sensors with Memosens protocol CLS50D and CLS54D not potentially isolated against sensor circuit!
3) Current output 1 and current output 2 (optional)
4) For version with PROFIBUS PA or FOUNDATION Fieldbus

Ex specification PROFIBUS and FOUNDATION Fieldbus

Suitable for use as a field device in a FISCO system as per EN/IEC 60079-27	
Max. input voltage U_i Max. input current I_i Max. input P_i Max. internal inductance L_i Max. internal capacitance C_i	17.5 V 380 mA 5.32 W <10 µH < 5 nF

Protocol-specific data

HART

Manufacturer ID	11_h
Device type	$11A0_h$ (CM42-M/N/P), $11A1_h$ (CM42-C/I/K/L), $11A1_h$ (CM42-O)
Device revision	001_h
Device description files (DD/DTM)	www.endress.com Device Integration Manager (DIM)
Device variables	7 (CM42-M/N/O/P), 3 (CM42-C/I/K/L), pre-defined device variables, dynamic variables PV, SV, TV, QV
Supported features	PDM DD, AMS DD, DTM, handheld DDs

PROFIBUS PA

Manufacturer ID	11_h
Device type	1565_h (CM42-M/N/P), 1566_h (CM42-C/I/K/L), 1567_h (CM42-O) in compatibility mode 1543_h (CM42-M/N/P), 1544_h (CM42-C/I/K/L), 1545_h (CM42-O), 9750_h (profile identifier, analyzer PA devices)
Profile version	PA Profile 3.02
GSD files	www.endress.com/profibus Device Integration Manager DIM
Output variables	6 AI blocks
Supported features	▪ 1 MSCY0 connection (cyclical communication, master class 1 to slave) ▪ 1 MSAC1 connection (acyclical communication, master class 1 to slave) ▪ 2 MSAC2 connections (acyclical communication, master class 2 to slave) ▪ Addressing with DIL switches or via software ▪ GSD, PDM DD, DTM ▪ Status output: condensed or classic

FOUNDATION Fieldbus

Manufacturer name:	Endress+Hauser
Model name:	Liquiline_Cond
Manufacturer ID (hex):	452B48
Device type (hex):	10A1
Device revision (hex):	2
Device class:	Link master
ITK version:	6.1.1
Function and other blocks:	1xRB, 6xAI, 2xDI, 1xPID, 2xAALM, 1xISEL, 1xSC, 7xTB

Current output, passive

Span	3.6 to 21.5 mA
Signal characteristics	linear, table ("Advanced" only)
Cable specification	Cable type: shielded wire, Ø 2.5 mm (14 AWG)

Power supply

Supply voltage

Current output / HART:

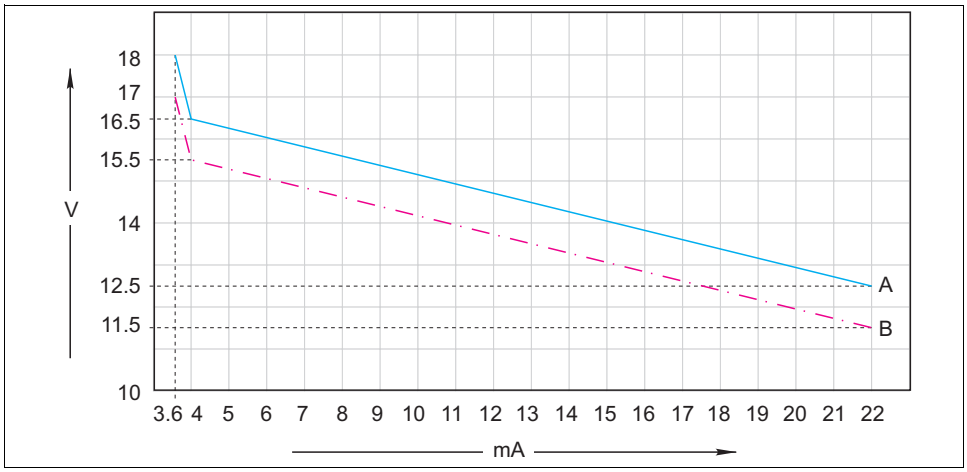

Minimum supply voltage at the transmitter depending on the output current

A *with HART communication*
B *without HART communication*

PROFIBUS PA / FOUNDATION Fieldbus:	9 to 32 V DC (non-Ex) 9 to 17.5 V DC (Ex)
Bus current consumption:	22 mA

Cable specification

Certified cable glands

Cable gland	Clamping range, permitted cable diameter
M16 x 1.5 mm	3 to 6 mm (0.12 to 0.24")
M20 x 1.5 mm	5 to 9 mm (0.20 to 0.35")
M20 x 1.5 mm	6 to 12 mm (0.24 to 0.47")
NPT 3/8"	3 to 6 mm (0.12 to 0.24")
NPT 1/2"	5 to 9 mm (0.20 to 0.35")
NPT 1/2"	6 to 12 mm (0.24 to 0.47")
G3/8	3 to 6 mm (0.12 to 0.24")
G1/2	5 to 9 mm (0.20 to 0.35")
G1/2	9 to 12 mm (0.35 to 0.47")
Dummy plug M16	-
Dummy plug M20	-

Cable cross-section

max. cable cross-section: 2.5 mm^2 (i14 AWG), GND 4 mm^2 (i12 AWG)

Grounding the housing

Plastic housing

⚠ WARNING

Electric voltage at ungrounded cable mounting rail

No shock protection

- Connect the cable mounting rail to the foundation ground using a separate ≥2.5 mm^2 (14 AWG) functional ground.

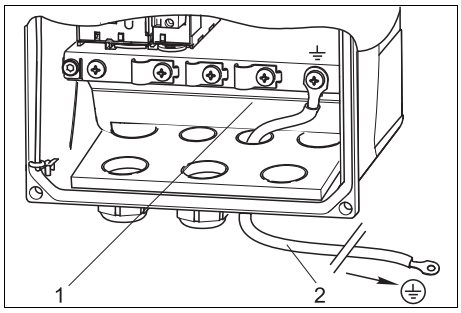

a0003617

Grounding the housing

1	*Cable mounting rail*
2	*≥2.5 mm^2 (14 AWG) functional ground*

Stainless steel housing

⚠ WARNING

Electric voltage at ungrounded housing

No shock protection

- Connect the external ground connection of the housing to the foundation ground using a separate wire (GN/YE) (≥2.5 mm^2, corresponds to 14 AWG).

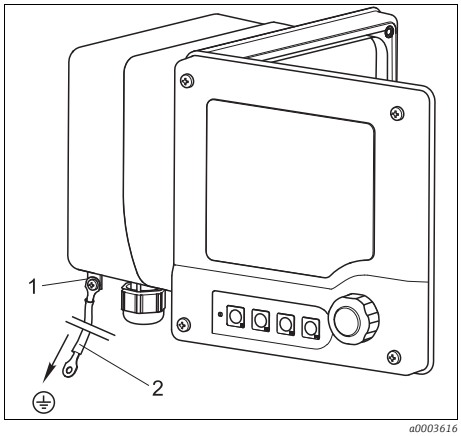

a0003616

Grounding the housing

1	*Outer ground connection*
2	*≥2.5 mm^2 (14 AWG) wire (GN/YE)*

Supply and signal voltage

4 to 20 mA

- Connect the transmitter with a shielded two-wire cable.
  - ↳ How the shield is connected depends on the interference influence expected. To suppress electrical fields, it suffices to ground the shield at one end. If you also want to suppress interference from a magnetic alternating field, you must ground the shield at both ends.

  In the case of a SIL device, you must ground both current outputs at both ends.

ℹ The second current output can be ordered as an option (see "Ordering information").

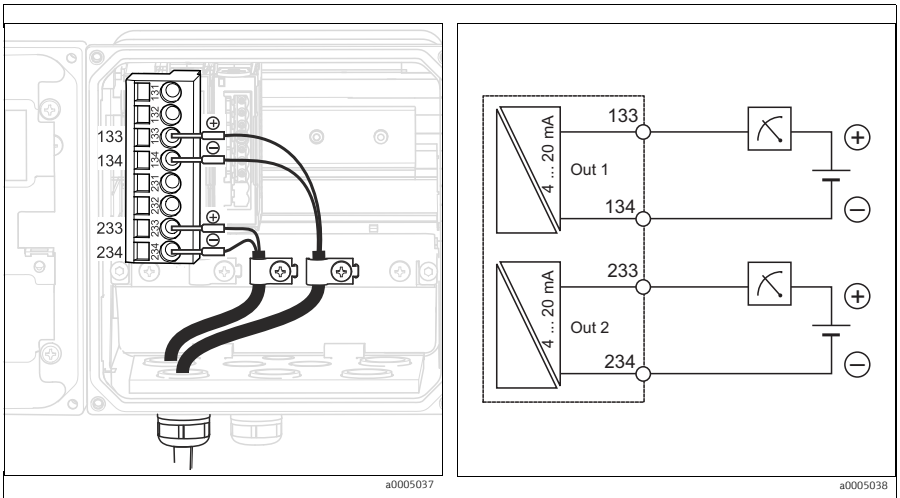

View in device (CPU module) *Wiring diagram*

4 to 20 mA / HART

For safe communication via the HART protocol and for compliance with NAMUR NE 21, you must use a two-wire cable that is grounded at both ends.

- Connect the transmitter to a two-wire cable that is grounded at both ends.

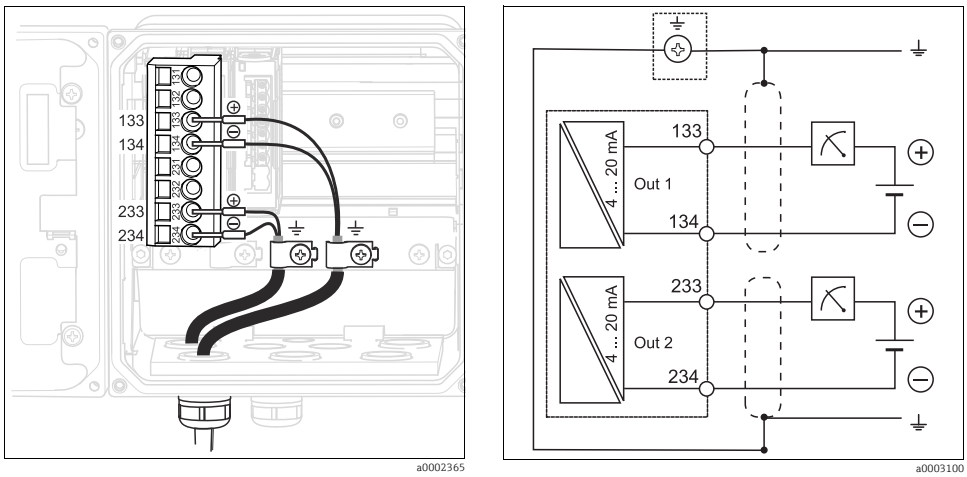

View in device (CPU module) *Wiring diagram*

ℹ The device is powered only via current output 1 and not via current output 2.

PROFIBUS PA and FOUNDATION Fieldbus

Use a fieldbus cable grounded at both ends (device **and** PCS).

There are various ways of connecting the unit:

1. Two-wire cable grounded at both ends, "hard grounding"
   (generally to be given priority over "capacitive connection to ground")
2. If there is a risk of large potential equalization currents.
   Shielded two-wire cabling, "capacitive connection to ground" (shield grounded on device side via capacitor, "C-module" accessory required)
   Do not use in the hazardous area!
3. Use the fieldbus connection socket (accessories)

"Hard grounding"

1. Connect the cable shield to the cable mounting rail.
2. Connect the cable cores as per the assignment.

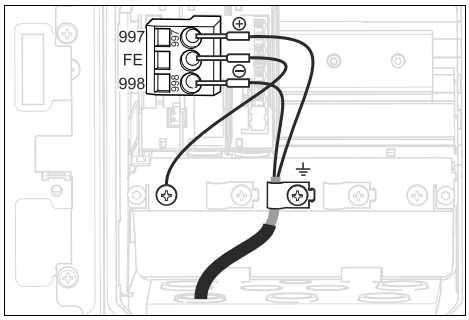

View in device (CPU module)

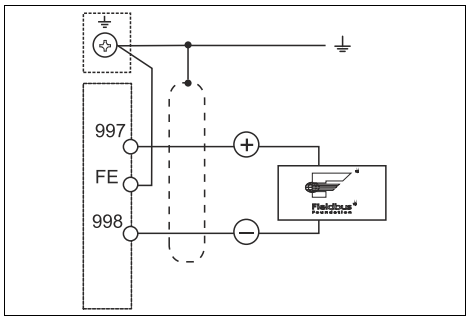

Wiring diagram

"Capacitive ground connection"

1. Pull back the braided shield, put the stranded extension wire of the C-module (item 1) onto the exposed shield and tighten the clip:

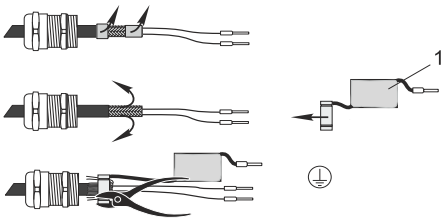

2. Connect the extension wire to the cable mounting rail.
3. Connect the cable cores as per the assignment.

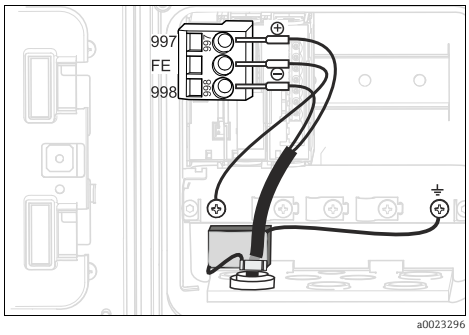

View in device (CPU module)

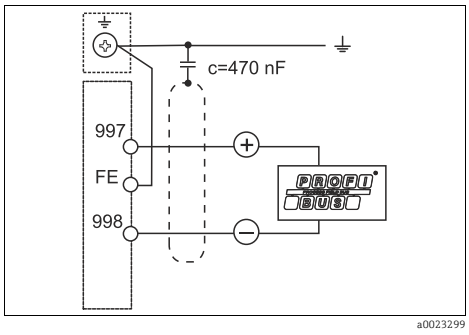

Wiring diagram

"Fieldbus connection socket"

1. Screw the fieldbus connection socket into the housing bushing.
2. Trim the connection cores of the socket to approx. 15 cm.
3. Connect the cable cores as per the assignment. In doing so, you must connect the cable shield (GN/YE) to the cable mounting rail.

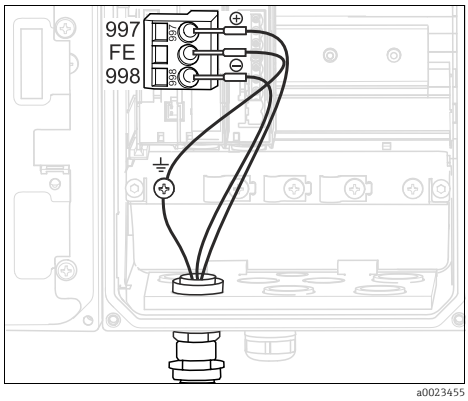

View in device (CPU module)

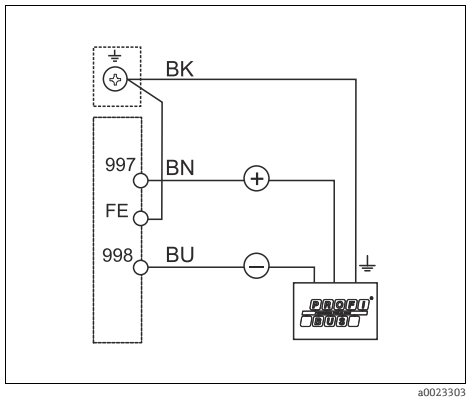

Wiring diagram

Sensor connection

Explanation of abbreviations in the following diagrams:	
Abbreviation	**Meaning**
pH	pH signal
Ref	Signal from reference electrode
Src	Source
Drn	Drain
PM	Potential matching
U_+	Power supply of the digital sensor
U_-	
Com A	Communication signals of the digital sensor
Com B	
ϑ	Signal of the temperature sensor
d.n.c.	Do not connect!

NOTICE

No shielding against electrical and magnetic interference

Interference can give erroneous measurement results

- You must connect shielded connections or terminals with functional earth (⏚) (there is no protective earth in the case of the plastic housing (⏚)).
- Keep magnetic interference fields away from the sensor since inductive conductivity sensors use magnetic fields.

Sensor connection: Memosens sensors

pH/ORP incl. pH/ORP combined sensors, oxygen, conductively measured conductivity

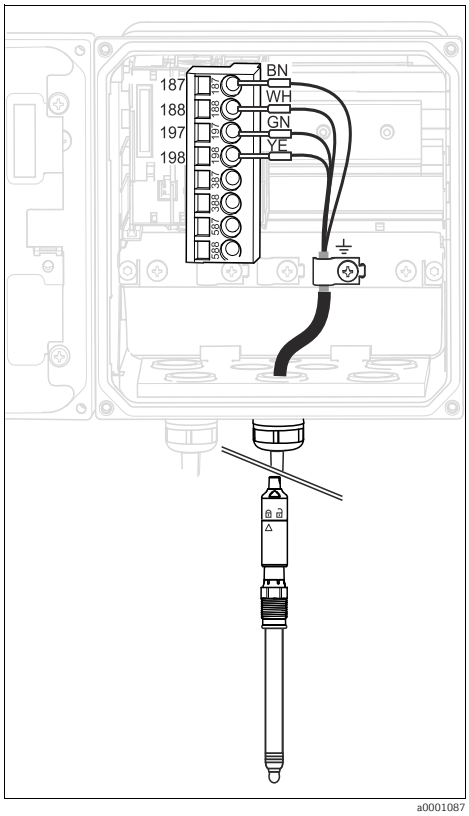

View in device (sensor module)

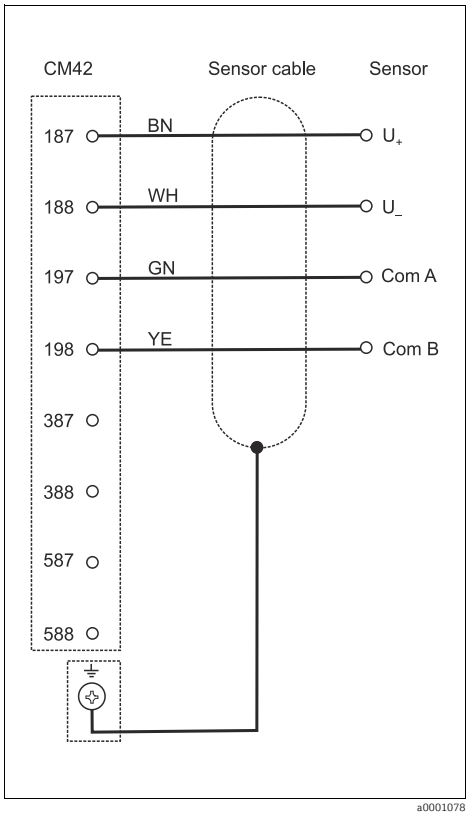

Wiring diagram

inductively measured conductivity

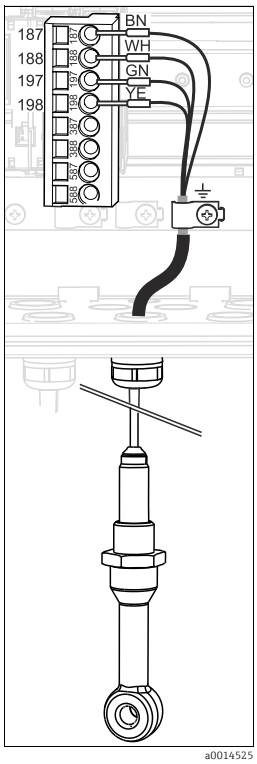

View inside device

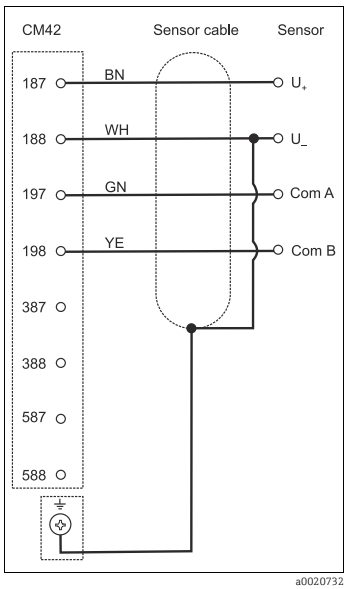

Wiring diagram

CLS50D to serial numbers J2xxxx05LI0

CLS54D to serial numbers H8xxxx05LI1

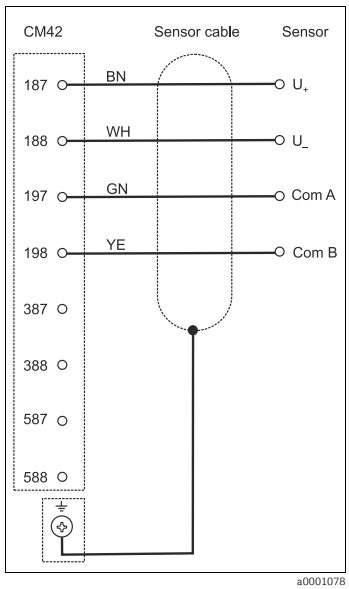

Wiring diagram

CLS50D from serial numbers J3xxxx05LI0

CLS54D from serial numbers H9xxxx05LI1

For devices with fieldbus, only new sensors (right column) may now be used.

Sensor connection: analog pH/ORP sensors

Glass electrodes, with PAL (symmetrical)

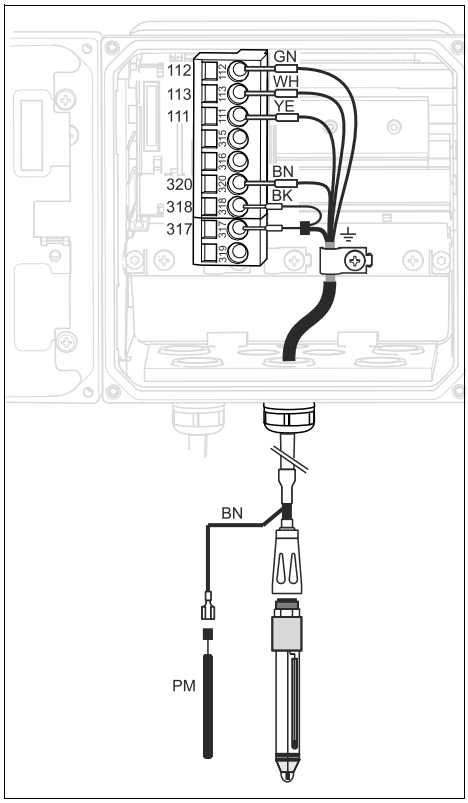

View in device (sensor module)

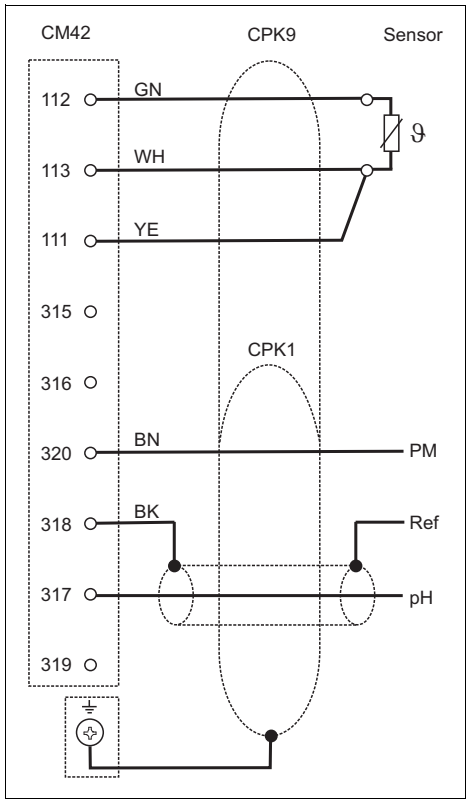

Wiring diagram

Glass electrodes, without PAL (asymmetrical)

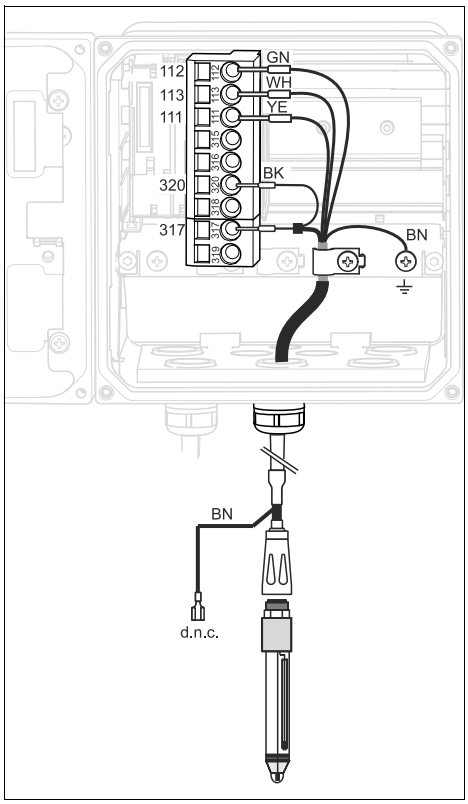

View in device (sensor module)

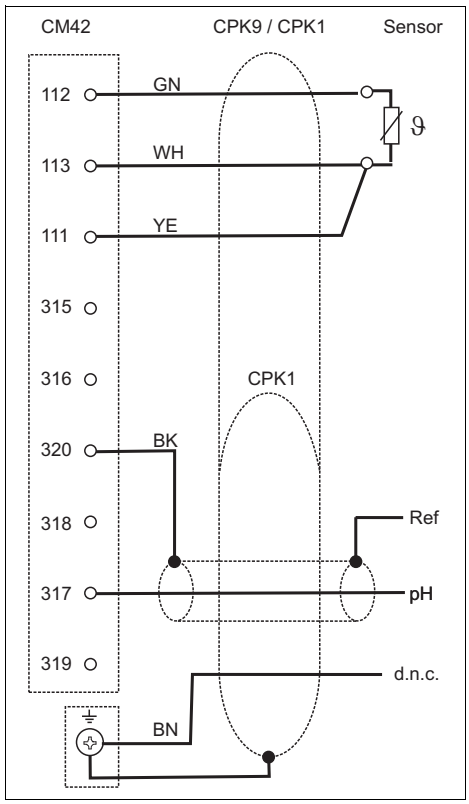

Wiring diagram

ISFET sensors, with PAL (symmetrical)

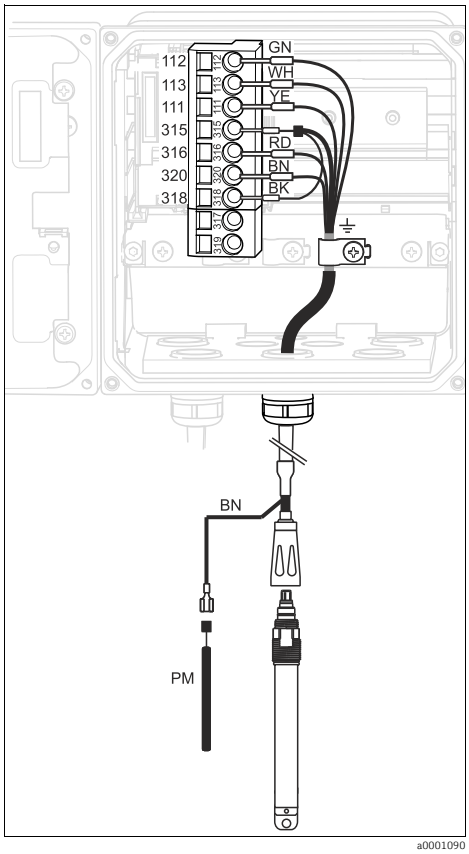

View in device (sensor module)

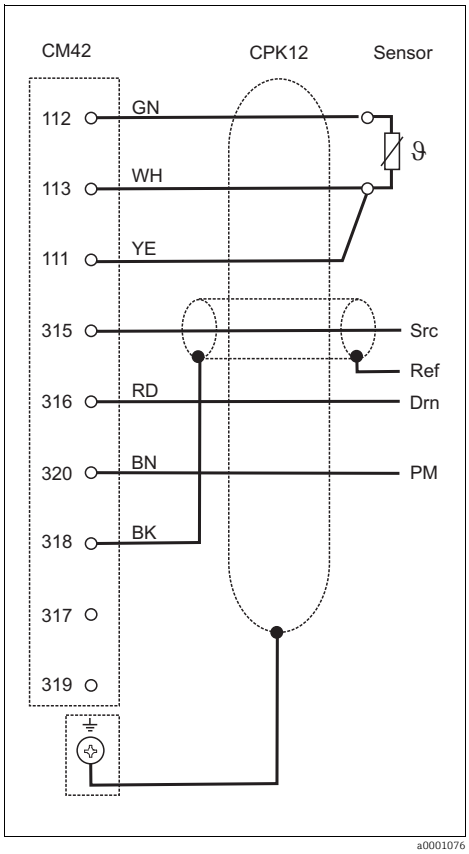

Wiring diagram

ISFET sensors, without PAL (asymmetrical)

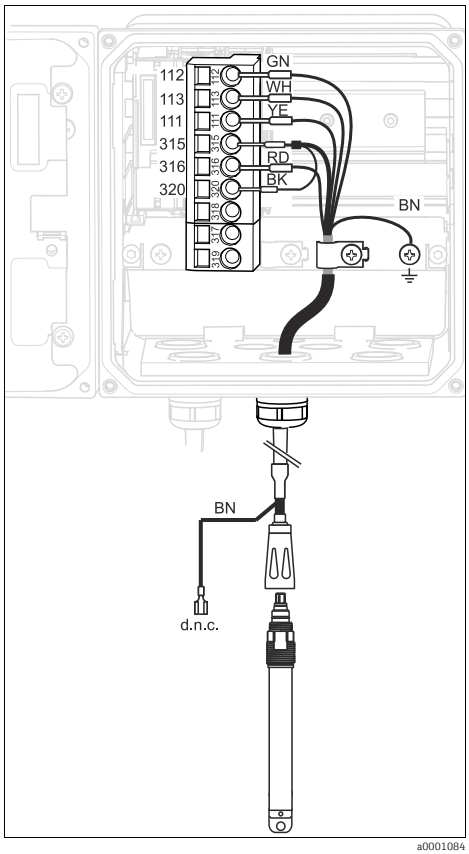

View in device (sensor module)

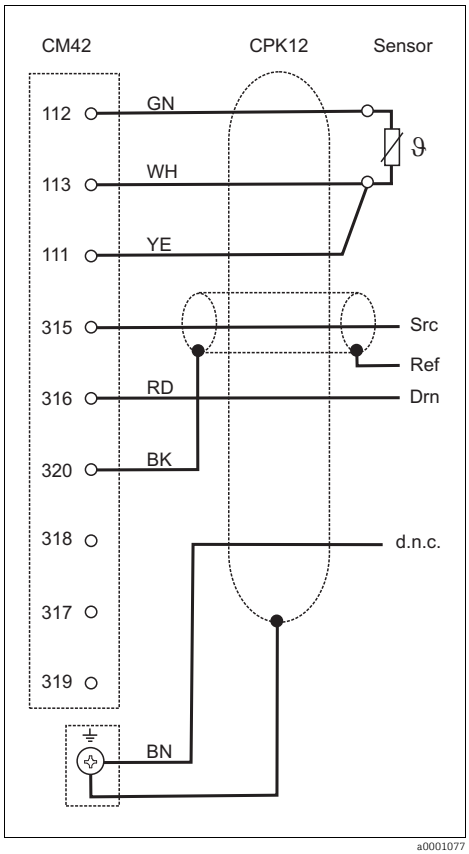

Wiring diagram

pH enamel electrodes

With PML (symmetrical)
Pfaudler electrode, absolute
Type 03/type 04

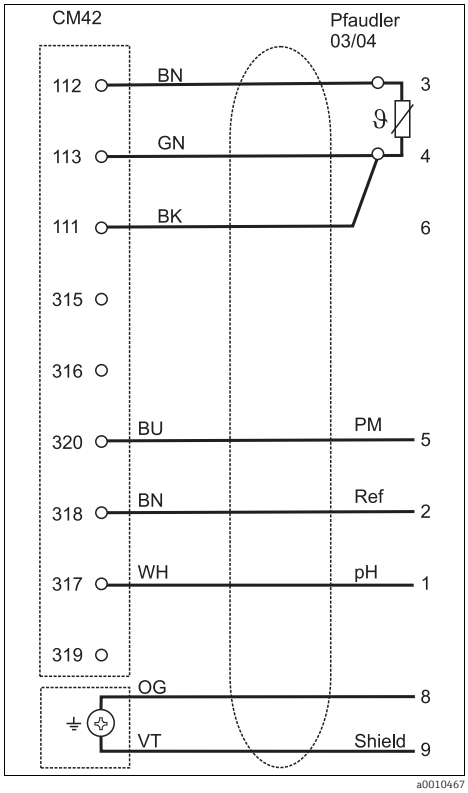

Wiring diagram

With PML (symmetrical)
Pfaudler electrode, relative
Type 18/type 40

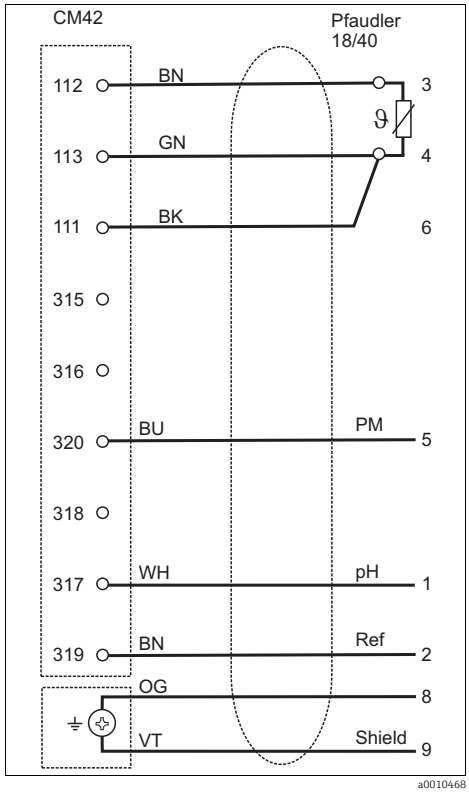

Wiring diagram

With PML (symmetrical)
pH Reiner

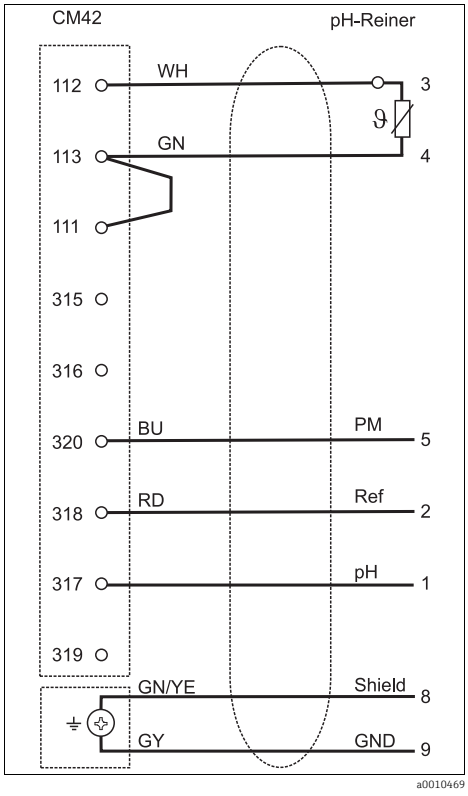

Wiring diagram

Without PML (asymmetrical)
Pfaudler electrode, absolute
Type 03/type 04

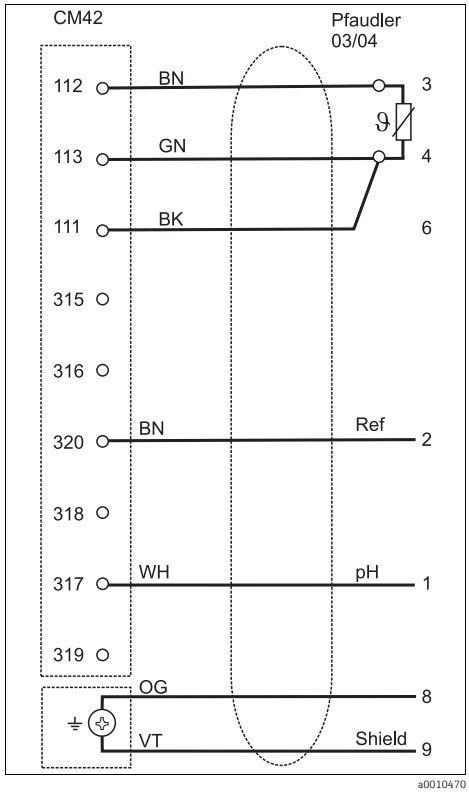

Wiring diagram

Individual electrodes (e.g. CPS64 glass or antimony), without PAL (asymmetrical)

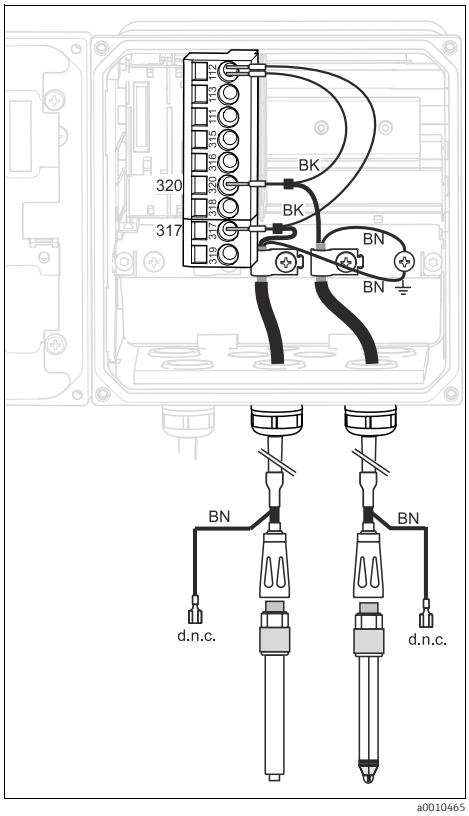

View in device (sensor module)

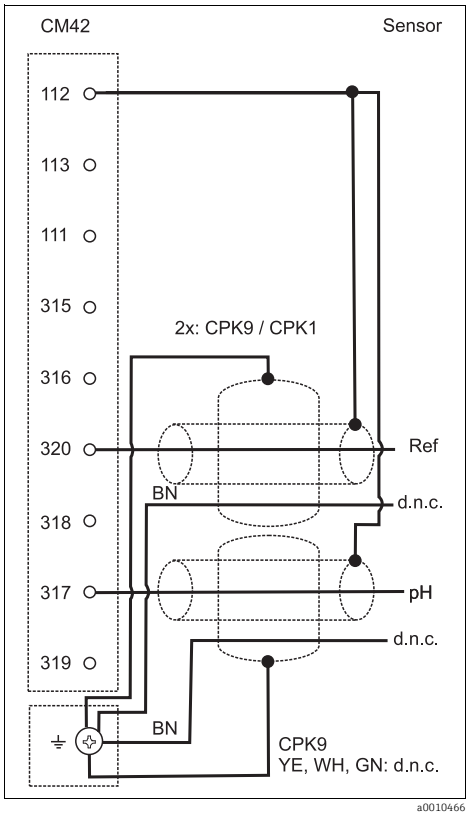

Wiring diagram

Glass electrode and ORP sensor for rH measurement

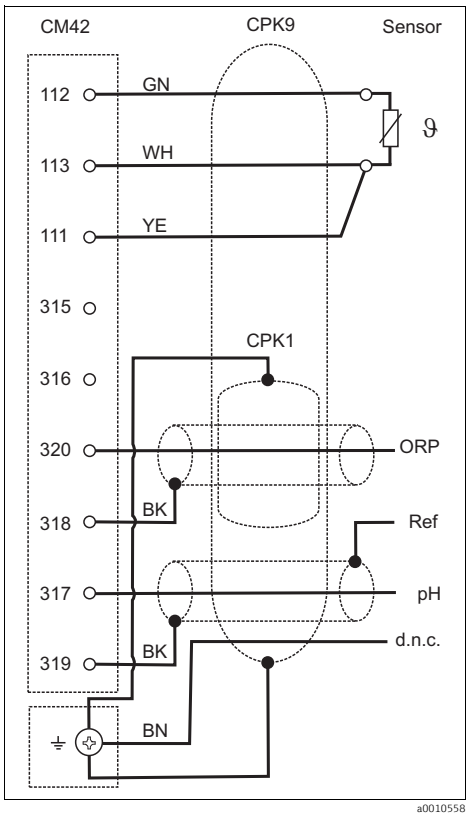

Wiring diagram

For rH measurement, connect a pH combination electrode (e.g. CPS11 with sensor cable CPK9) **and** an ORP sensor (e.g. CPS12 with sensor cable CPK1).

Sensor connection: analog conductivity sensors

Conductive sensors, two-electrode sensors

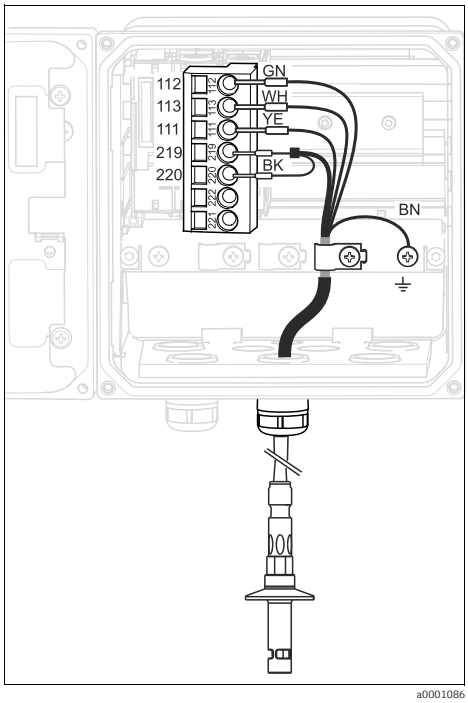

View in device (sensor module)

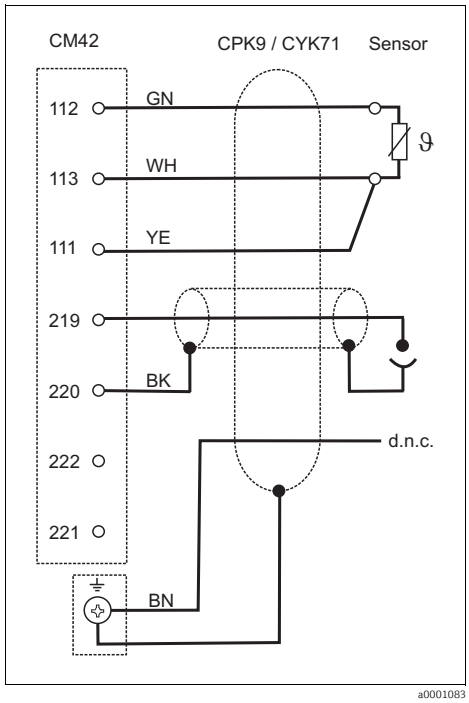

Wiring diagram

Conductive sensors, four-electrode sensors

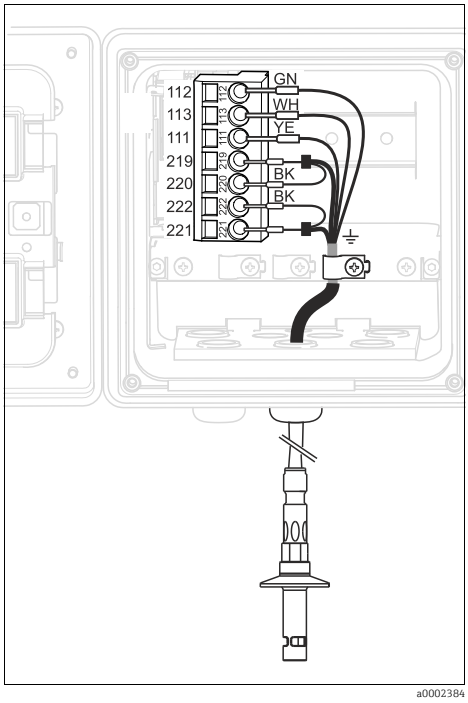

View in device (sensor module)

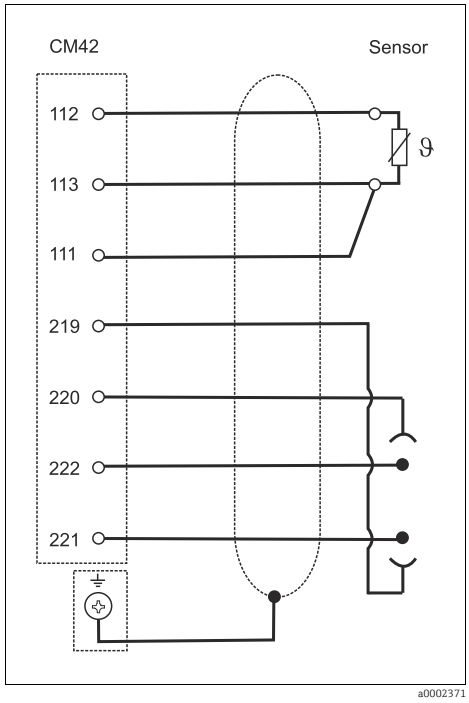

Wiring diagram

Inductive sensors

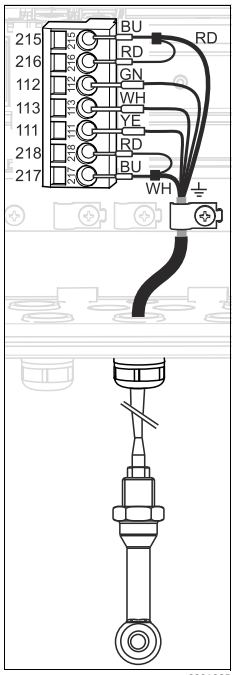

View in device (sensor module)

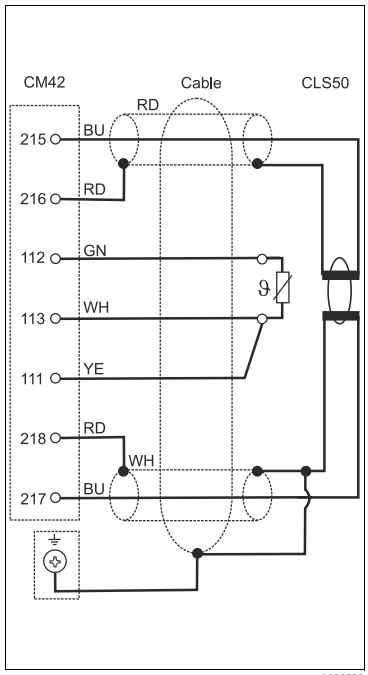

Wiring diagram CLS50

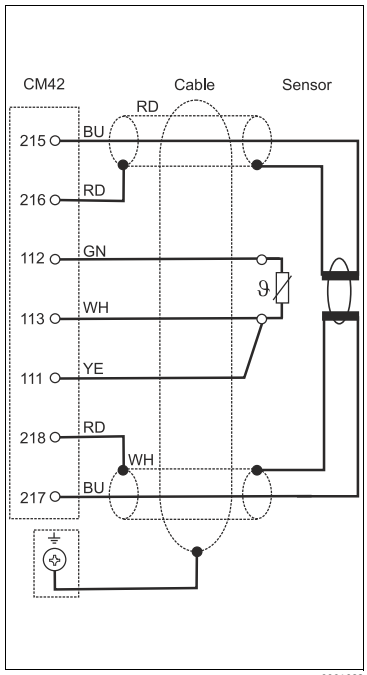

Wiring diagram CLS54

Performance characteristics

Reference temperature

Standard 25 °C (77 °F)
configurable from −5 to 100 °C (23 to 212 °F)[5)]

Current output response time

t_{90} = max. 500 ms for an increase from 4 to 20 mA

Memosens measured error

Thanks to digital data transmission, the measured value supplied by the sensor at the sensor input is passed on accurately. Measurement accuracy depends solely on the connected sensor and the quality of its adjustment.

Tolerance, current outputs

Current outputs, additional	25 µA

Repeatability

--> Documentation of the connected sensor

Temperature compensation conductivity

Types of compensation	Range
None	
Linear	α = 0.00 to 20.00 %·K^{-1}
NaCl to IEC 746-3	0 to 100 °C (32 to 212 °F)
Natural waters to IEC 7888	0 to 35 °C (32 to 95 °F)
Ultrapure water NaCl	0 to 100 °C (32 to 212 °F)
Ultrapure water HCl (also for NH_3)	0 to 60 °C (32 to 140 °F)
4 user-definable tables [1)]	

1) with "Advanced" software package

5) with "Advanced" software package

Temperature adjustment

Temperature offset Temperature increase	−5 to +5 °C (23 to 41 °F) 0.9 … 1.1 [1]

1) with "Advanced" software package

Installation

Wall securing plate

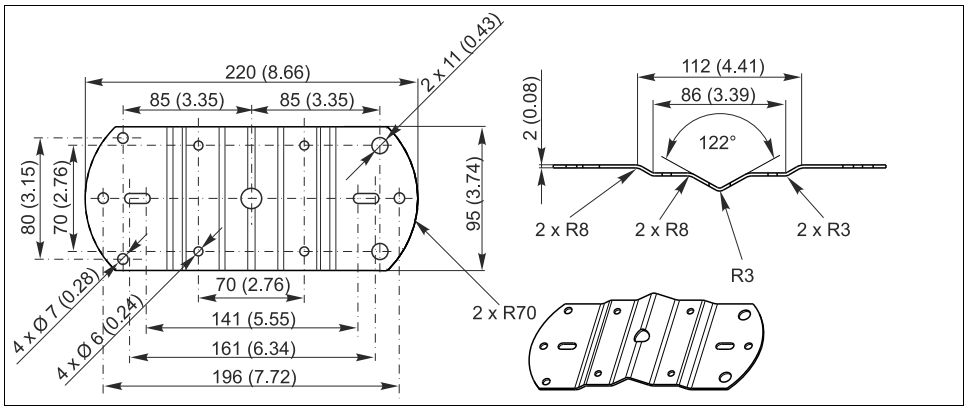

Dimensions of mounting plate in mm (inch)

Weather protection cover

NOTICE

Effect of climatic conditions (rain, snow, direct sun etc.)

Impaired operation to complete transmitter failure

- When installing outside, always use the weather protection cover (accessory).

Weather protection cover for plastic housing

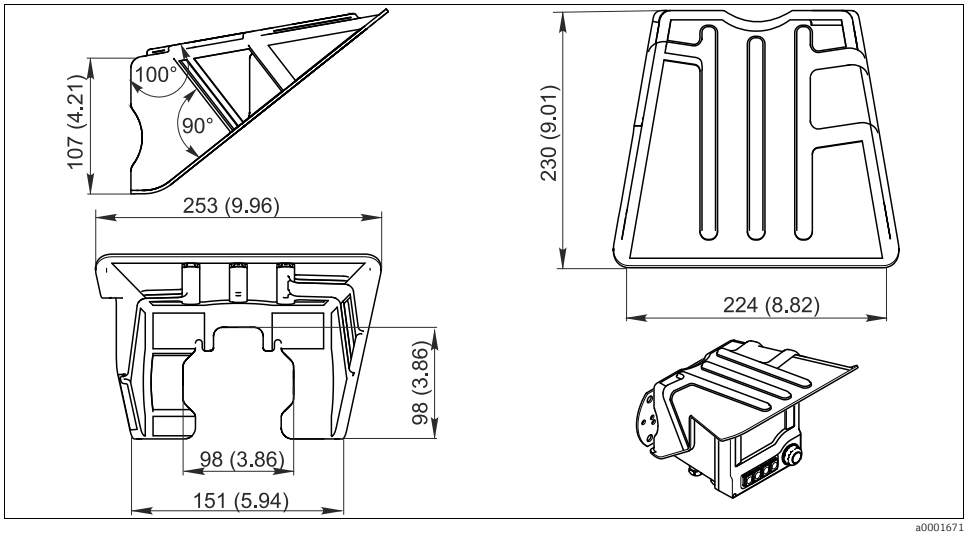

Dimensions of weather protection cover in mm (inch)

Weather protection cover for stainless steel housing

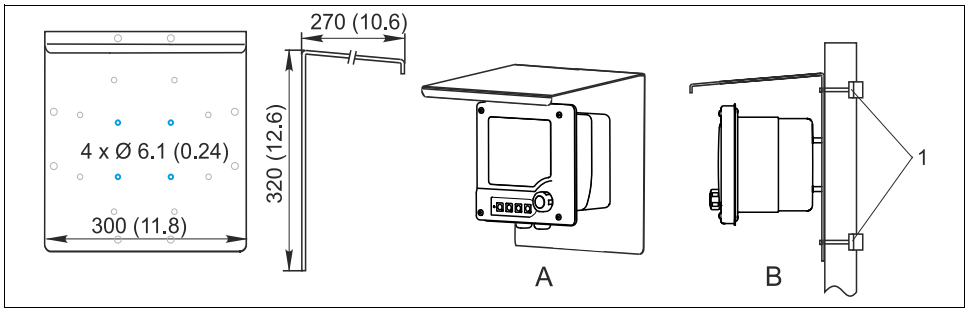

Dimensions of weather protection cover CYY101 in mm (inch)

A Wall mounting
B Pipe or circular post mounting
1 Circular post attachment (accessory)

To mount the weather protection cover on pipes or circular posts, you will also require a circular post attachment, --> "Accessories" or "Installation options"

Installation options

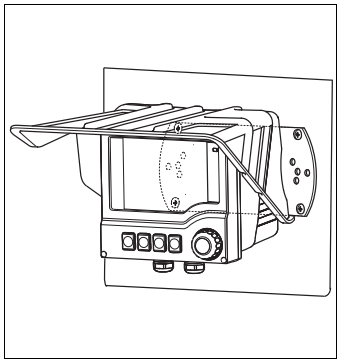

Wall mounting
– Weather protection cover (optional)

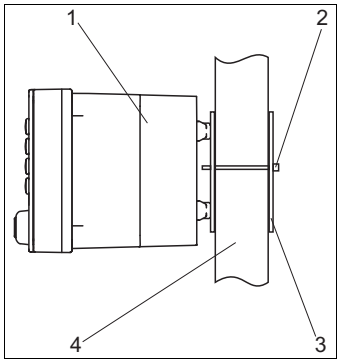

Post mounting

1 Liquiline
2. 3 Mounting plate (1x accessory)
4 Pipe or post (circular/square)

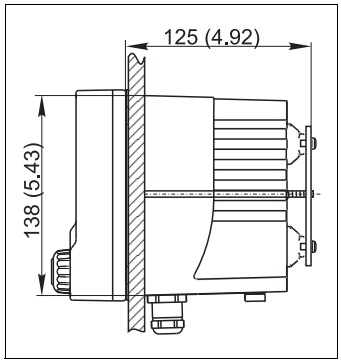

Panel mounting

		Wall mounting	Pipe mounting	Panel mounting
	Plastic housing			
	without weather protection cover	Mounting plate Standard	Mounting kit: 51518263	Installation kit: 51518173
	with weather protection cover	Protection cover 51517382	Mounting kit: 51518263 Protection cover 51517382	
	Stainless steel housing			
	without weather protection cover	Mounting plate Standard	Mounting kit: 51518286	Installation kit: 51518284
	with weather protection cover	Protection cover CYY101-A	Protection cover CYY101-A Circular post attachment: 50062121	

Installation in Ex area

CM42-*G

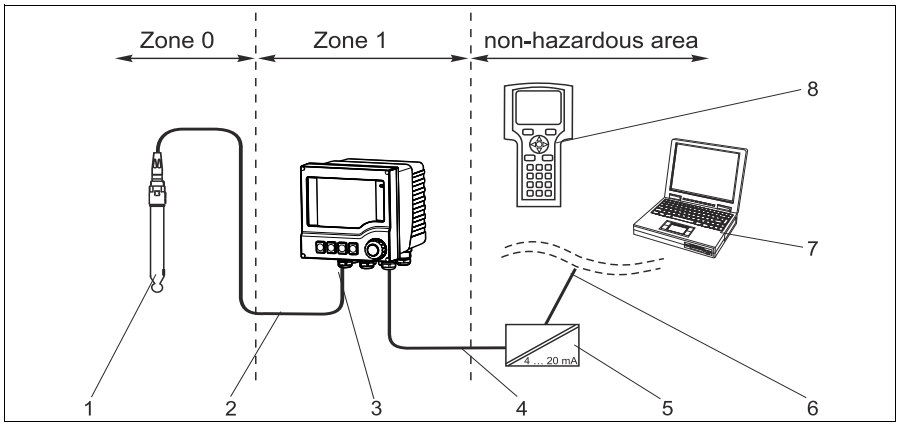

Installation in Ex area

1	*Sensor in Ex version*	*5*	*Active barrier, e.g. Preline RN221*
2	*Intrinsically safe sensor circuit Ex ia*	*6*	*Signal line HART/PROFIBUS/FF*
3	*Transmitter*	*7*	*Fieldcare via PROFIBUS/FF*
4	*Supply and signal circuit Ex ib (4 to 20 mA)*	*8*	*HART handheld terminal*

CM42-*V

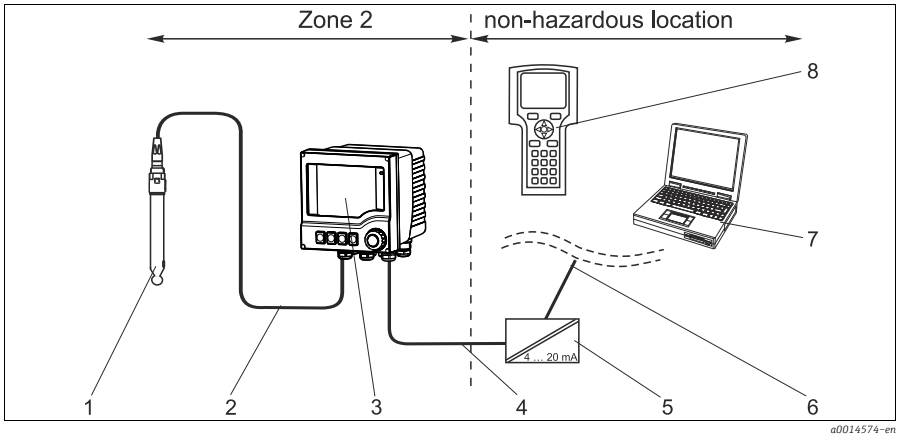

Installation in Ex area

1	*Sensor in Ex version*	*5*	*Active barrier, e.g. Preline RN221*
2	*Intrinsically safe sensor circuit Ex ic*	*6*	*Signal line HART/PROFIBUS/FF*
3	*Transmitter*	*7*	*FieldCare via PROFIBUS/FF*
4	*Supply and signal circuit Ex nA (4 to 20 mA)*	*8*	*HART handheld terminal*

CM42-*P/S

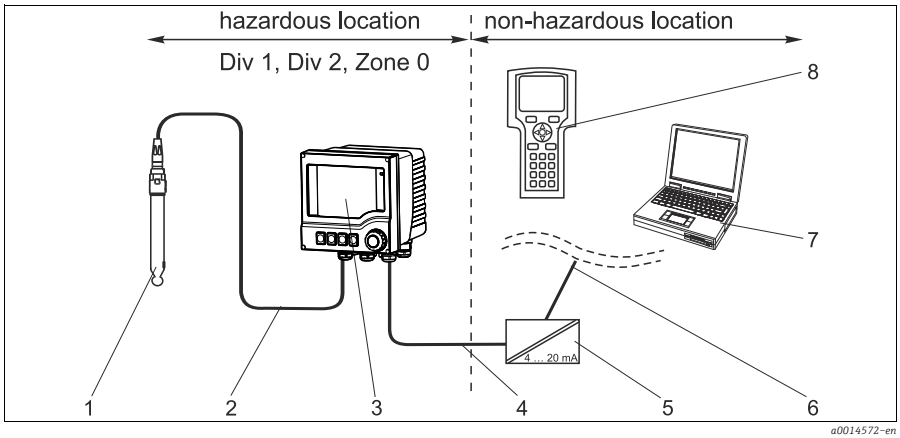

Installation in Ex area

1	*Sensor in Ex version*	*5*	*Active barrier, e.g. Preline RN221*
2	*Intrinsically safe sensor circuit*	*6*	*Signal line HART/PROFIBUS/FF*
3	*Transmitter*	*7*	*FieldCare via PROFIBUS/FF*
4	*Supply and signal circuit (4 to 20 mA)*	*8*	*HART handheld terminal*

CM42-*X/Z

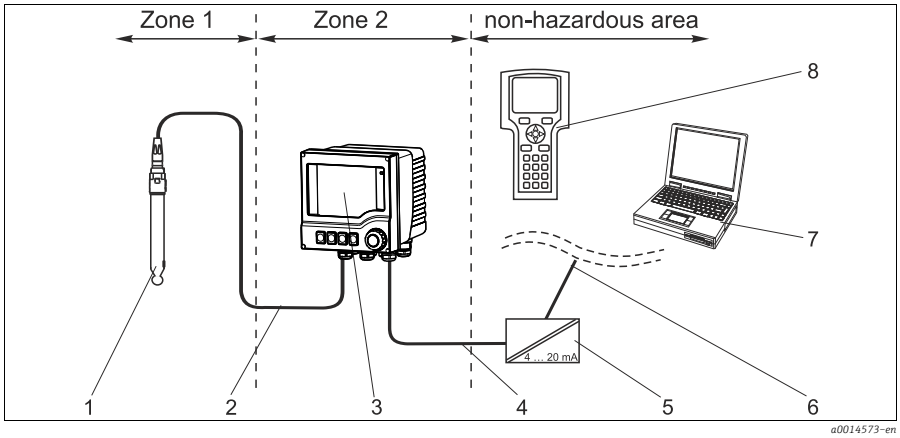

Installation in Ex area

1	*Sensor in Ex version*	*5*	*Active barrier, e.g. Preline RN221*
2	*Intrinsically safe sensor circuit Ex ia*	*6*	*Signal line HART/PROFIBUS/FF*
3	*Transmitter*	*7*	*FieldCareFieldCare via PROFIBUS/FF*
4	*Supply and signal circuit Ex nA (4 to 20 mA)*	*8*	*HART handheld terminal*

Environment

Ambient temperature range	**Non-Ex version** −30 to 70 °C (−20 to 160 °F) **Ex version: ATEX (1)2G & 3D, ATEX 3G nA[ic] /NEPSI nA[ic], IECEx ib Gb [ia Ga], NEPSI ib[ia Ga]** −20 to 50 °C (T6) −20 to 55 °C (T4) **Ex version: ATEX 3G nA[ia], NEPSI nA[ia]** -10 to 50 °C (T6) **Ex version: TIIS ib** −20 to 55 °C (T4) **Ex version: CSA Class I, II, III, Div. 1&2, FM Class I, Div 1&2** −20 to 50 °C (0 to 120 °F) (T6) −20 to 55 °C (0 to 130 °F) (T4)
Storage temperature	−40 to 80 °C (−40 to 175 °F)
Electromagnetic compatibility	Interference emission and interference immunity as per EN 61326-1: 2006, Category B (residential environments)
Degree of protection	IP66 / IP 67 / NEMA 4X
Relative humidity	10 … 95%, not condensing
Pollution degree	The product is suitable for pollution degree 3 as per EN 61010-1.

Mechanical construction

Dimensions	**Plastic housing**

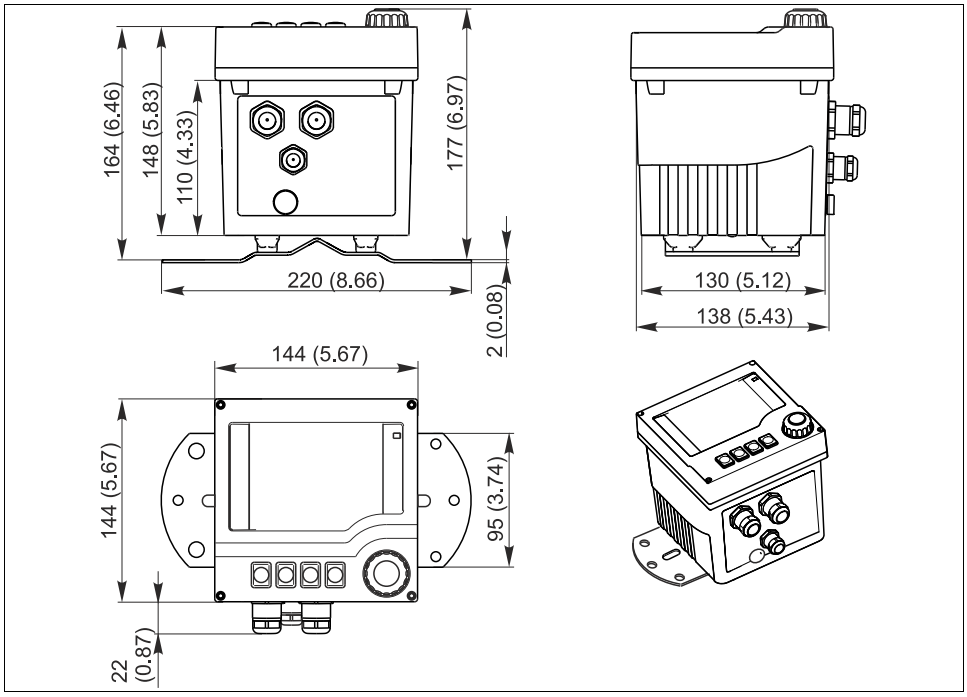

Dimensions in mm (inch)

Stainless steel housing

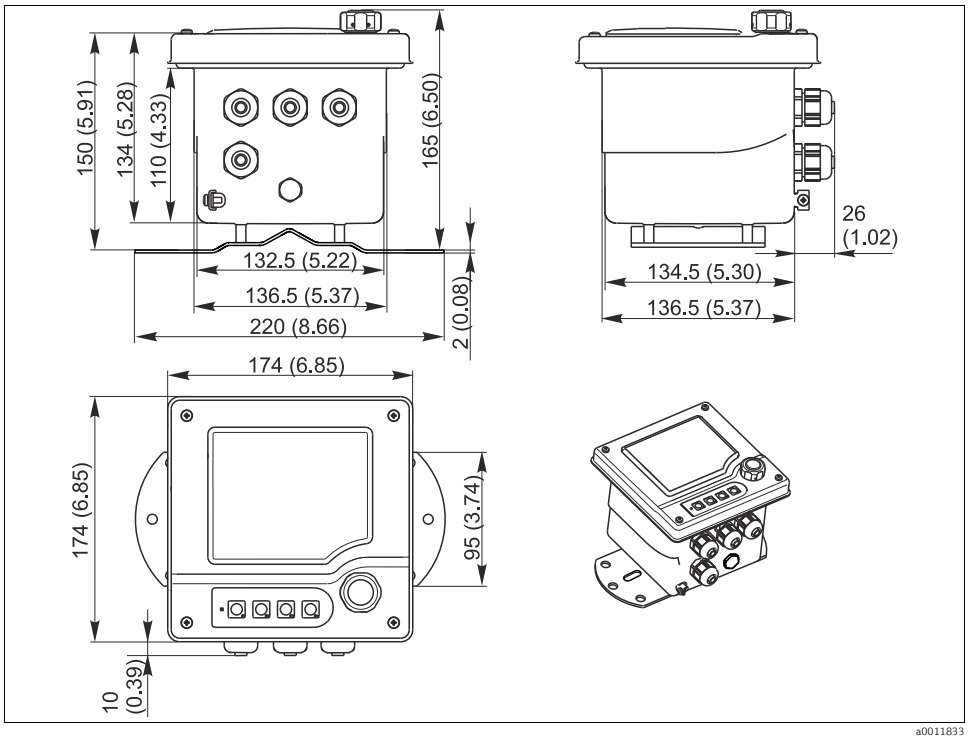

Dimensions in mm (inch)

Weight

Plastic housing

1.5 kg (3.3 lbs)

Stainless steel housing

2.1 kg (4.6 lbs)

Material

Plastic housing	
Housing	PC-FR (polycarbonate, flame-retardant)
Housing seals	Foamed silicone, EPDM
Stainless steel housing	
Housing	Stainless steel 1.4301 (AISI 304)
Housing seals	EPDM
Plastic and stainless steel housing	
Module housing	PC (polycarbonate)
Soft keys	TPE
Cable mounting rail	Stainless steel 1.4301 (AISI 304)
Display panel	PC-FR (polycarbonate, flame-retardant)
Cable glands	PA (polyamide) V0 as per UL94
Dummy plug M16 and M20	PA (polyamide) V0 as per UL94

Operability

Operation concept

The unique operating concept sets new standards:
- Fewer user errors thanks to very easy operation
- Rapid configuration using the Navigator.
- Intuitive configuration and diagnosis due to plain text display

a0001984

Navigator

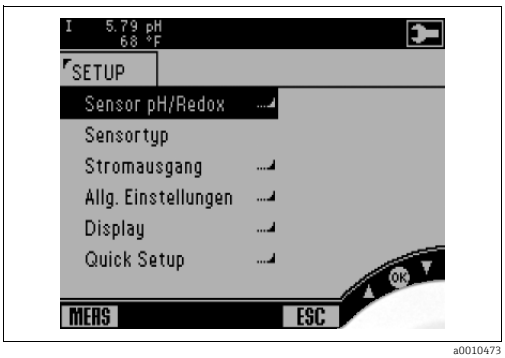

a0010473

Plain text menu

Display characteristics

LCD display: FSTN technology (FSTN = Foil Super Twisted Nematic)
Size: 94 x 76 mm (3.7 x 3.0")
Resolution: 240 x 160 dots

Operating elements

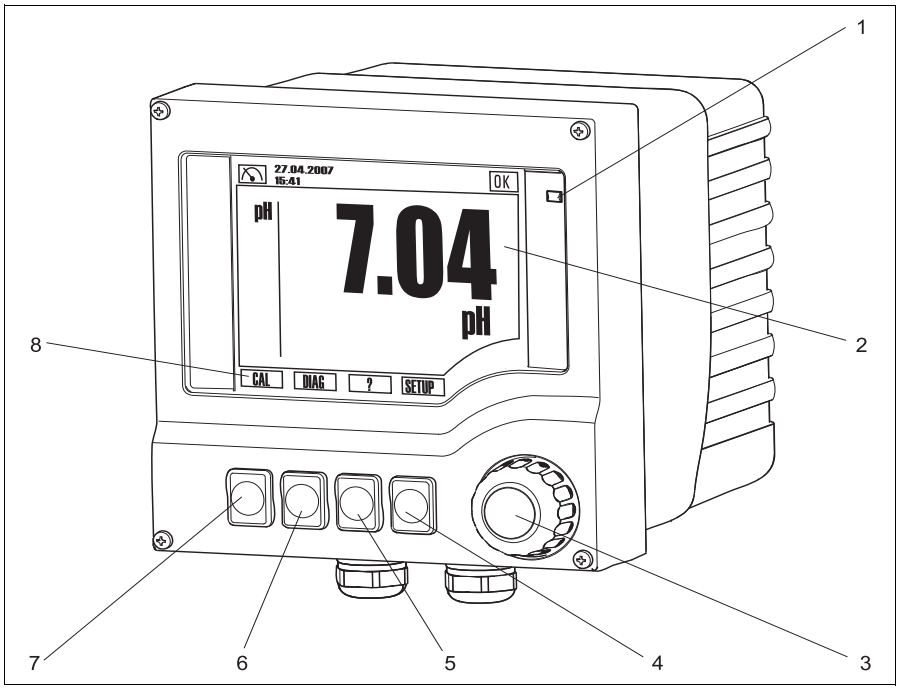

a0010480

Operation overview

1	*Alarm LED*
2	*Display, current display: pH measuring mode*
3	*Navigator*
4-7	*Softkeys*
8	*Display of softkey function (menu-dependent)*

Ordering information

Product page

You can create a valid and complete order code on the Internet using the Configurator tool.

Enter the following address in the browser to launch the product page:
www.endress.com/cm42

Product configurator

On the right-hand side of the product page, you will find the navigation area:

1. Under "Device Support", click "Configure your selected product".
   ↳ The Configurator opens in a new window.
2. Configure the device according to your requirements by selecting all options.
   ↳ This ensures that you will receive a valid and complete order code.
3. Export the order code as a PDF or Excel file. To do so, click on the relevant button at the top of the selection window.

Scope of delivery

Depending on the version, the scope of delivery comprises::
- 1 transmitter in the version ordered
- 1 mounting plate incl. 4 flat head screws
- 1 sheet of adhesive labels (nameplate, terminal connection diagrams)
- 1 test certificate to EN 10204-3.1
- 1 factory calibration certificate
- Operating Instructions Part 1 and 2, BA00381C and BA00382C, in the language ordered
- 1 manufacturer's certificate
- Safety Manual
- Maintenance Documentation SIL 2

Certificates and approvals

CE mark

Declaration of conformity
The product meets the requirements of the harmonized European standards.
It therefore complies with the statutory requirements of the EC directives.
The manufacturer confirms successful testing of the product by affixing the CE symbol.

Ex approval

Depending on the version ordered:
- ATEX II (1)2G Ex ib [ia Ga] IIC T4/T6 Gb / II 3 D Ex tc IIIC T85°C Dc
- ATEX II (1)2G Ex ib [ia Ga] IIC T4/T6 Gb
- ATEX II 3D Ex tc [ic IIC Gc] IIIC T85°C Dc
- ATEX II 3G Ex nA [ic Gc] IIC T4/T6 Gc
- ATEX II (2)3G Ex nA [ia Ga] IIC T6 Gc
- NEPSI Ex nA [ia Ga] IIC T6 Gc
- NEPSI Ex ib [ia Ga] IIC T4/T6 Gb
- CSA IS NI Cl.I, II, III, Div. 1&2, Grps. A-G
- FM IS NI Cl.I, Div. 1&2, Grps. A-D
- TIIS Ex ib IIC T4

Accessories

The following is a list of the most important accessories available at the time this documentation was issued. For accessories not listed here, please contact your local service or sales center.

Mounting kits

Post retainer for plastic housing
- 1 Mounting plate
- 2 Threaded rods M5x75 mm A2
- 2 Hexagonal nuts M5 A2, DIN 934
- 2 spring washers A2 DIN127, form B5 (M5)
- 2 Washers A 5.3, DIN125 A2
- Order No. 51518263

Post retainer for stainless steel housing
- 1 Mounting plate
- 2 Threaded rods M5x75 mm A2
- 2 Hexagonal nuts M5 A2, DIN 934
- 2 spring washers A2 DIN127, form B5 (M5)
- 2 Washers A 5.3, DIN125 A2
- Order No. 51518286

Panel installation kit for plastic housing for panel cutout 138x138 mm (5.43x5.43 inch)
- 1 Panel installation seal
- 2 Tensioning screws M6x150 mm
- 4 Hexagonal nuts M6, DIN934 A2
- 4 spring washers, A2 DIN127, form B6
- 4 Washers A6.4, DIN125 A2
- Order No. 51518173

Panel installation kit for stainless steel housing for panel cutout 138x138 mm (5.43x5.43 inch)
- 1 Panel installation seal
- 2 Tensioning screws M6x150 mm
- 4 Hexagonal nuts M6, DIN934 A2
- 4 spring washers, A2 DIN127, form B6
- 4 Washers A6.4, DIN125 A2
- Order No. 51518284

Weather protection cover

Weather protection cover for plastic housing
- Order No. 51517382

Weather protection cover for stainless steel housing
- Order No. CYY101-A

Active barrier

Active barrier RN221N
- With power supply for safe isolation of 4 to 20 mA standard signal circuits
- Technical Information TI073R/09/en

Fieldbus accessories

Fieldbus connection socket
- FOUNDATION Fieldbus M20 7/8" connection
- Order No. 51517974

M12 connector
- Four-pole metal connector for mounting on transmitter
- For connecting to the connection box or cable jack, cable length 150 mm (5.91")
- Order No. 51502184

C-module accessories bag
- 1 capacitor for connecting the cable shielding to ground potential
- Kit documentation SD00108C
- Order No. 71003097

Measuring cable

Memosens data cable CYK10
- For digital sensors with Memosens technology
  pH, ORP, oxygen (amperometric), chlorine, conductivity (conductive)
- Order as per product structure (--> Online Configurator, www.endress.com/cyk10)
- Technical Information TI00118C/07/EN

Memosens data cable CYK11
- Extension cable for digital sensors with Memosens protocol
- Order as per product structure (--> Online Configurator, www.endress.com/cyk11)

Measuring cable CPK9
- For sensors with ESA plug-in head, for high-temperature and high-pressure applications, IP 68
- Order as per order structure
- Technical Information TI00501C/07/EN

Special measuring cable CPK12
- For ISFET sensors and pH/ORP glass electrodes with TOP68 plug-in head
- Order as per order structure
- Technical Information TI00118C/07/EN

Measuring cable CYK71
- non-terminated cable for connecting sensors and for extending sensor cables
- sold by the meter, order numbers:
  - non-Ex version, black: 50085333
  - Ex version, blue: 50085673

Measuring cable CLK6
- Extension cable for extending CLS50/52/54 and transmitter via VBM junction box, sold by the meter
- Order No. 71183688

Sensors

pH/ORP glass sensors

Orbisint CPS11/CPS11D
- pH electrode for process engineering
- Optional SIL version for connecting to SIL transmitter
- With dirt-repellent PTFE diaphragm
- Order as per product structure (--> Online Configurator, www.endress.com/cps11 or www.endress.com/cps11d)
- Technical Information TI00028C/07/EN

Orbisint CPS12/CPS12D
- ORP electrode for process engineering
- Order as per product structure (--> Online Configurator, www.endress.com/cps12 or www.endress.com/cps12d)
- With dirt-repellent PTFE diaphragm
- Technical Information TI00367C/07/EN

Ceraliquid CPS41/CPS41D
- pH electrode with ceramic diaphragm and KCl liquid electrolyte;
- Order as per product structure (--> Online Configurator, www.endress.com/cps41 or www.endress.com/cps41d)
- Technical Information TI00079C/07/EN

Ceraliquid CPS42/CPS42D
- Redox electrode with ceramic diaphragm and KCl liquid electrolyte;
- Order as per product structure (--> Online Configurator, www.endress.com/cps42 or www.endress.com/cps42d)
- Technical Information TI00373C/07/EN

Ceragel CPS71/CPS71D
- pH electrode with double-chamber reference system and integrated bridge electrolyte;
- Order as per product structure (--> Online Configurator, www.endress.com/cps71 or www.endress.com/cps71d)
- Technical Information TI00245C/07/EN

Ceragel CPS72/CPS72D
- ORP electrode with double-chamber reference system and integrated bridge electrolyte;
- Order as per product structure (--> Online Configurator, www.endress.com/cps72 or www.endress.com/cps72d)
- Technical Information TI00374C/07/EN

Orbipore CPS91/CPS91D
- pH electrode with open aperture diaphragm for media with high contamination potential;
- Order as per product structure (--> Online Configurator, www.endress.com/cps91 or www.endress.com/cps91d)
- Technical Information TI00375C/07/EN

Orbipore CPS92/CPS92D
- ORP electrode with open aperture diaphragm for media with high contamination potential;
- Order as per product structure (--> Online Configurator, www.endress.com/cps92 or www.endress.com/cps92d)
- Technical Information TI00435C/07/EN

pH/ORP combined sensors

Memosens CPS16D
- pH ORP combined sensor for process engineering, with dirt-repellent PTFE diaphragm
- With Memosens technology
- Order as per product structure (--> Online Configurator, www.endress.com/cps16d)
- Technical Information TI00503C/07/EN

Memosens CPS76D
- pH ORP combined sensor for process engineering, hygiene and sterile applications
- With Memosens technology
- Order as per product structure (--> Online Configurator, www.endress.com/cps76d)
- Technical Information TI00506C/07/EN

Memosens CPS96D
- pH and ORP combined sensor for chemical processes
- With poison-resistant reference with ion trap
- With Memosens technology
- Order as per product structure (--> Online Configurator, www.endress.com/cps96d)
- Technical Information TI00507C/07/EN

pH-ISFET sensors

Tophit CPS471/CPS471D
- Sterilizable and autoclavable ISFET sensor for food and pharmaceuticals, process technology
- Water treatment and biotechnology
- Order as per product structure (--> Online Configurator, www.endress.com/cps471 or www.endress.com/cps471d)
- Technical Information TI00283C/07/EN

Tophit CPS441/CPS441D
- Sterilizable ISFET sensor for media with low conductivity
- Liquid KCl electrolyte
- Order as per product structure (--> Online Configurator, www.endress.com/cps441 or www.endress.com/cps441d)
- Technical Information TI00352C/07/EN

Tophit CPS491/CPS491D
- ISFET sensor with open aperture diaphragm for media with high contamination potential
- Order as per product structure (--> Online Configurator, www.endress.com/cps491 or www.endress.com/cps491d)
- Technical Information TI00377C/07/EN

Enamel pH electrode

Ceramax CPS341D
- pH electrode with pH-sensitive enamel
- For the toughest requirements in terms of measurement accuracy, pressure, temperature, sterility and operating life
- Order as per product structure (--> Online Configurator, www.endress.com/cps341d)
- Technical Information TI00468C/07/EN

Inductive conductivity sensors

Indumax P CLS50D/CLS50
- Highly-resistant inductive conductivity sensor for standard, Ex and high-temperature applications
- With or without Memosens technology
- Order as per product structure (--> Online Configurator, www.products.endress.com/cls50d or .../cls50)
- Technical Information TI00182C/07/EN

Indumax H CLS52
- Inductive conductivity sensor with fast-acting temperature sensor for applications in the food industry
- Order as per product structure (--> Online Configurator, www.endress.com/cls52)
- Technical Information TI00167C/07/EN

Indumax H CLS54D
- Inductive conductivity sensor with certified, hygienic design for foodstuffs, beverages, pharmaceuticals and biotechnology
- Order as per product structure (--> Online Configurator, www.endress.com/cls54d)
- Technical Information TI00508C/07/EN

Indumax H CLS54
- Inductive conductivity sensor with certified, hygienic design for foodstuffs, beverages, pharmaceuticals and biotechnology
- Order as per product structure (--> Online Configurator, www.endress.com/cls54)
- Technical Information TI00400C/07/EN

Conductive conductivity sensors

Condumax W CLS12
- For process temperatures up to 160 °C (320 °F) and process pressures up to 40 bar (580 psi)
- Order as per product structure (--> Online Configurator, www.endress.com/cls12)
- Technical Information TI00082C/07/EN

Condumax W CLS13
- For process temperatures up to 250 °C (480 °F) and process pressures up to 40 bar (580 psi)
- Orderas per product structure (--> Online Configurator, www.endress.com/cls13)
- Technical Information TI00083C/07/EN

Condumax CLS15/CLS15D
- Conductive conductivity sensor for pure and ultrapure water and Ex applications
- With Memosens protocol (CLS15D) or analog (CLS15)
- Order as per product structure (--> Online Configurator, www.endress.com/cls15d)
- Technical Information TI00109C/07/EN

Condumax H CLS16/CLS16D
- Hygienic, conductive conductivity sensor for pure, ultrapure water and Ex applications
- With EHEDG and 3A approval
- Optionally available with Memosens (CLS16D)
- Orderas per product structure (--> Online Configurator, www.endress.com/cls16d)
- Technical Information TI00227C/07/EN

Condumax W CLS19
- Inexpensive, conductive conductivity sensor for pure and ultrapure water applications;
- Orderas per product structure (--> Online Configurator, www.endress.com/cls19)
- Technical Information TI00110C/07/EN

Condumax W CLS21/CLS21D
- Two-electrode sensor in version with plug-in head and fixed cable
- Optionally available with Memosens (CLS21D)
- Orderas per product structure (--> Online Configurator, www.endress.com/cls21d)
- Technical Information TI00085C/07/EN

Amperometric oxygen sensors

Oxymax COS22D
- Sterilizable sensor for dissolved oxygen
- Order as per product structure (--> Online Configurator, www.endress.com/cos22d)
- Technical Information TI446C/07/EN

Oxymax COS51D
- Amperometric sensor for dissolved oxygen, with Memosens technology
- Order as per product structure (--> Online Configurator, www.endress.com/cos51d)
- Technical Information TI00413C/07/EN

Software update and upgrade

CY42 DAT module
- Extended functionality, update and memory module
- Ordering as per order structure

	Version	
	C1	CopyDAT, for saving the configuration and transferring it to other devices
	F1	FunctionDAT for extending the function to 2 current outputs
	F2	FunctionDAT for extending the function to advanced software
	S1	SystemDAT, for software update, language catalog extension

CY42-		Complete order code

www.addresses.endress.com

Endress+Hauser

People for Process Automation