SIEMENS

Sinteso™
Synova™
AlgoRex
Cerberus® PRO

# FDBZ292

## Air sampling smoke detection kit

FD20, collective/SynoLINE600, AnalogPLUS/SynoLOOP, interactive

- **Reliable monitoring of fresh air, used air and air re-circulation ducts for smoke in air conditioning and ventilation systems**
- **Suitable for air speeds of 1… 20 m/s**
- **Smoke detection with the Sinteso, AlgoRex and Synova 600 series smoke detectors**
- **Adaptable detection algorithms**
- **Simple installation with only one air flow tube**
- **Accessories for all shapes of duct**

**Building Technologies**

Fire Safety & Security Products

## Function

- The air sampling smoke detection kit is a passive monitoring system without its own fan. It makes use of the existing pressure difference in the ventilation system in order to supply a continuous flow of air through a bypass from the ventilation duct to the air sampling smoke detection kit.
- The air sampling smoke detection kit only works if the ventilation system is in operation and the air is circulating. The monitored air must be clean, i.e. free from dust and aerosols.
- When a smoke concentration set in the smoke detector is reached, the corresponding danger level is signaled to the fire alarm control unit which initiates the corresponding alarm.

## Design

**The air sampling smoke detection kit consists of:**

- the air duct sampling chamber (grey plastic housing with transparent cover)
- the end plug for the air flow tube
- the sealing for the air flow tube
- all necessary screws

Air duct sampling chamber

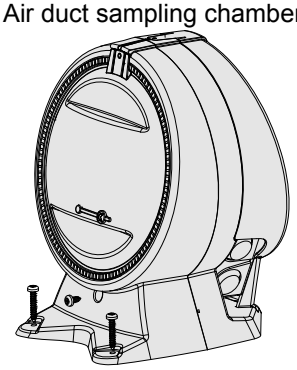

End plug

Sealing

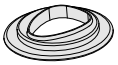

The smoke detectors and bases as listed below to be ordered separately.

| Sinteso | |
|---|---|
| Base | Detector |
| FDB201, FDB201-AA<br>FDB221, FDB221-AA | FDO241<br>FDOOT241-8<br>FDOOT241-9 |

| AlgoRex / Synova | |
|---|---|
| Base | Detector |
| DB1101A | DO1103A, DO1104A |
| DB1131A / SO620A | DO1133A |
| DB1151A | DO1153A |

| Cerberus PRO | |
|---|---|
| Base | Detector |
| DB1101A | DO1104A |

## Options

Mounting bracket
FDBZ292-AF

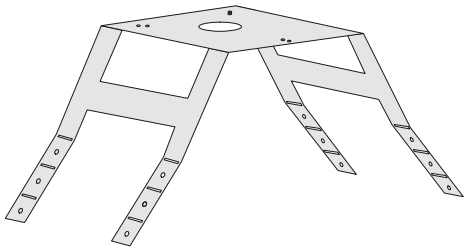

for uneven, round and insulated ducts

Air flow tube
FDBZ292-AA,-AB,-AC

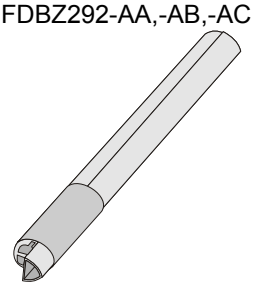

0.6 m, 1.5 m, 2.8 m
(FDBZ292-AB,-AC with additional end gasket)

Sealing kit
FDBZ292-AD

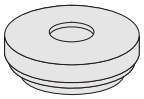

necessary at application with the mounting bracket and the longer air flow tubes

## Choice of location

- The air sampling smoke detection kit is mounted in the ventilation system where air flow measuring devices are usually installed, i.e. where there is no air vortex, change of direction, duct branching, duct narrowing or duct extensions. The distance to the branching, bracket or bend must have 5 x the duct diameter.
- In order to guarantee smoke detection, mount the air duct sampling after the last air inlet.

## Installation method

- The air duct sampling chamber is mounted on the outside of the air duct. Only the air flow tube is introduced through a hole drilled into the duct and shortened according to the diameter of the duct.
- Normally, the air duct sampling chamber is mounted on the air duct using metal screws. It can also be mounted without difficulty on uneven, round or insulated ducts using the mounting device.

**Circular duct ≤0.6 m**

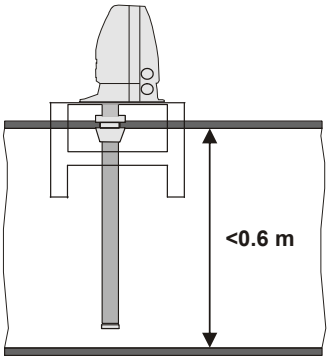


- FDBZ292 Air sampling smoke detection kit
- FDBZ292-AD Sealing kit (1x)
- FDBZ292-AF Mounting bracket
- FDBZ292-AA Air flow tube 0.6 m

**Rectangular duct ≤0.6 m**

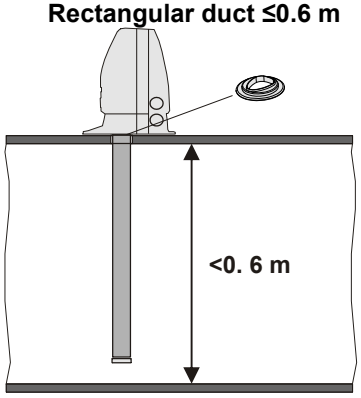


- FDBZ292 Air sampling smoke detection kit
- FDBZ292-AA Air flow tube 0.6 m

**Circular duct ≥0.6 m**

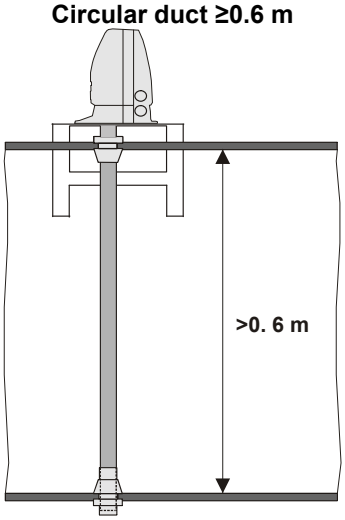


- FDBZ292 Air sampling smoke detection kit
- FDBZ292-AD Sealing kit (2x)
- FDBZ292-AF Mounting bracket
- FDBZ292-Ax Air flow tube 1.5/2.8 m

**Rectangular duct ≥0.6 m**

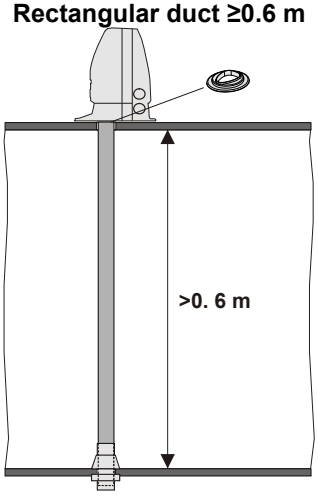


- FDBZ292 Air sampling smoke detection kit
- FDBZ292-AD Sealing kit (1x)
- FDBZ292-Ax Air flow tube 1.5/2.8 m

## Dimensions

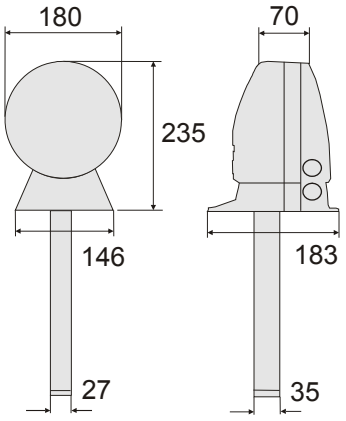


## Technical data

| | |
|---|---|
| Housing of the air duct sampling chamber | |
| – Material | ABS |
| – Protection category acc. to EN 60529 / IEC 529 | IP54 |
| – Color | grey, ~RA L7001 |
| Smoke detector / detector base | see table |
| System compatibility | Sinteso -> FDnet<br>AlgoRex -> interactive, AnalogPLUS, collective<br>Synova -> SynoLINE600, SynoLOOP<br>Cerberus PRO -> collective, in C-NET via FDCIO223 |
| Air flow tube | Aluminum |
| Permissible air speeds | 1… 20 m/s |
| Air flow indicator | ≥1 m/s |
| Ambient temperature | -20… + 50 °C |
| Humidity | ≤95 % rel. |
| Approval VdS | G207139 with smoke detector FDOOT241-8, FDOOT241-9 with parameter set no 9 |

## Details for ordering

| Type | Part no | Designation | Weight |
|---|---|---|---|
| FDBZ292 | A5Q00021362 | Air sampling smoke detection kit | 0.800 kg |
| FDBZ292-AA | A5Q00021363 | Air flow tube, Length 0.6 m | 0.353 kg |
| FDBZ292-AB | A5Q00021364 | Air flow tube, Length 1.5 m | 0.882 kg |
| FDBZ292-AC | A5Q00021366 | Air flow tube, Length 2.8 m | 1.647 kg |
| FDBZ292-AD | A5Q00021367 | Sealing kit | 0.030 kg |
| FDBZ292-AF | A5Q00021369 | Mounting bracket | 0.630 kg |
| DBZ1190-AB | BPZ:4942340001 | Connection terminal 1… 2.5 $mm^2$ | 0.002 kg |

Sinteso fire detectors see documents 007005, 008141

Synova, AlgoRex fire detectors see documents 001578, 001331

Siemens Switzerland Ltd
Industry Sector
Building Technologies Division
International Headquarters
Fire Safety & Security Products
Gubelstrasse 22
CH-6301 Zug
Tel. +41 41 724 24 24
www.siemens.com/buildingtechnologies

© 2009 Copyright by
Siemens Switzerland Ltd
Data and design subject to change without notice.
Supply subject to availability.