BALLUFF

sensors worldwide

Precision for Fast Applications

Magnetically coded position and angle measurement systems BML

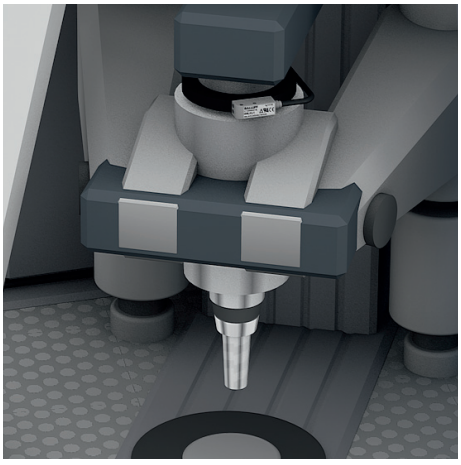

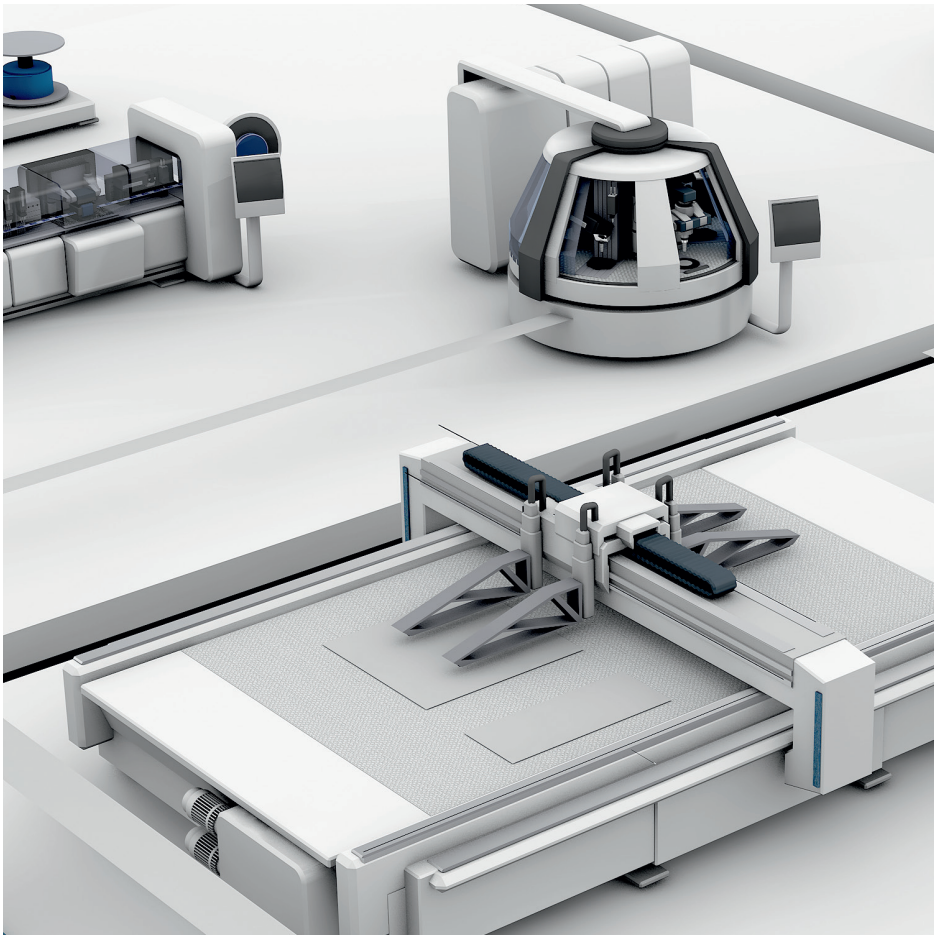


BALLUFF

Contents

Magnetically Coded Position and Angle Measurement Systems

Exceptionally precise speed measurement

Absolute, incremental and real-time-capable
Magnetically coded position and angle measurement systems BML with absolute or incremental output signal support highly dynamic position and angle measurement tasks as real-time-capable systems. The BML is a master of measuring speed and revolutions per minute, even with very quick movements.

High-resolution, very precise and extremely fast
The contact-free, robust and dirt-resistance measurement systems are high-resolution, very precise and extremely fast. Accuracy levels of up to ±7 µm can be achieved with resolutions down to 1 µm. High speeds of up to 20 m/s are also possible.

Stable over the long term thanks to the Permagnet® process
The Permagnet® process developed by Balluff provides the basis for their high precision. This gives the tapes coded using this technology their one-of-a-kind accuracy and long-term stability.

Linear and rotary
Magnetic tape systems consist of a sensor head, a tape for the use in linear or rotary applications and accessories.

Flexible use
Designs for long measurement sections and incredibly compact construction give the systems versatility. Extremely compact dimensions with unparalleled compact sensor head make them perfect for integration even in tight spaces. Conveyor tapes open up exceptional design freedom as user-fabricated rolled goods available in sizes up to 48 m long.

Customized solutions
Fabricated and customized solutions with individual encodings corresponding to your requirements allow you to achieve the perfect results.

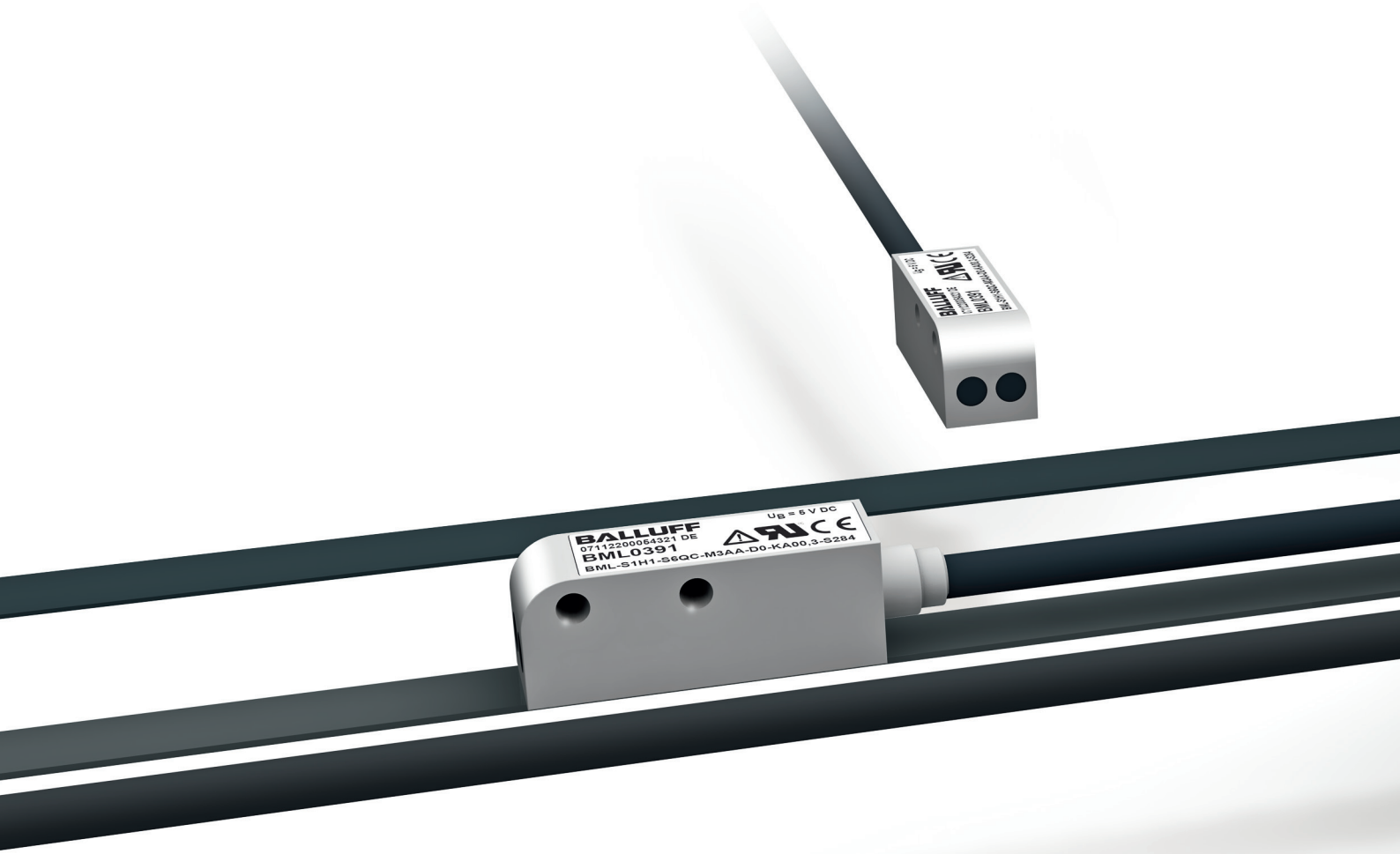


BALLUFF
BML0211
BML-S2B0-Q53F-M410-D0-KA05

Perfect for Fast Applications

The magnetically coded position and angle measurement systems BML prove their value in fast applications where precision is essential. This includes monitoring slide positions in linear drives, positioning machining units, such as laser beam or water jet cutters and controlling rotational speed and position on rotary drives with absolute reliability. They are perfect as feedback systems in electrical drive shafts. This is because the real-time-capable position measurement systems BML make position information available in microseconds.

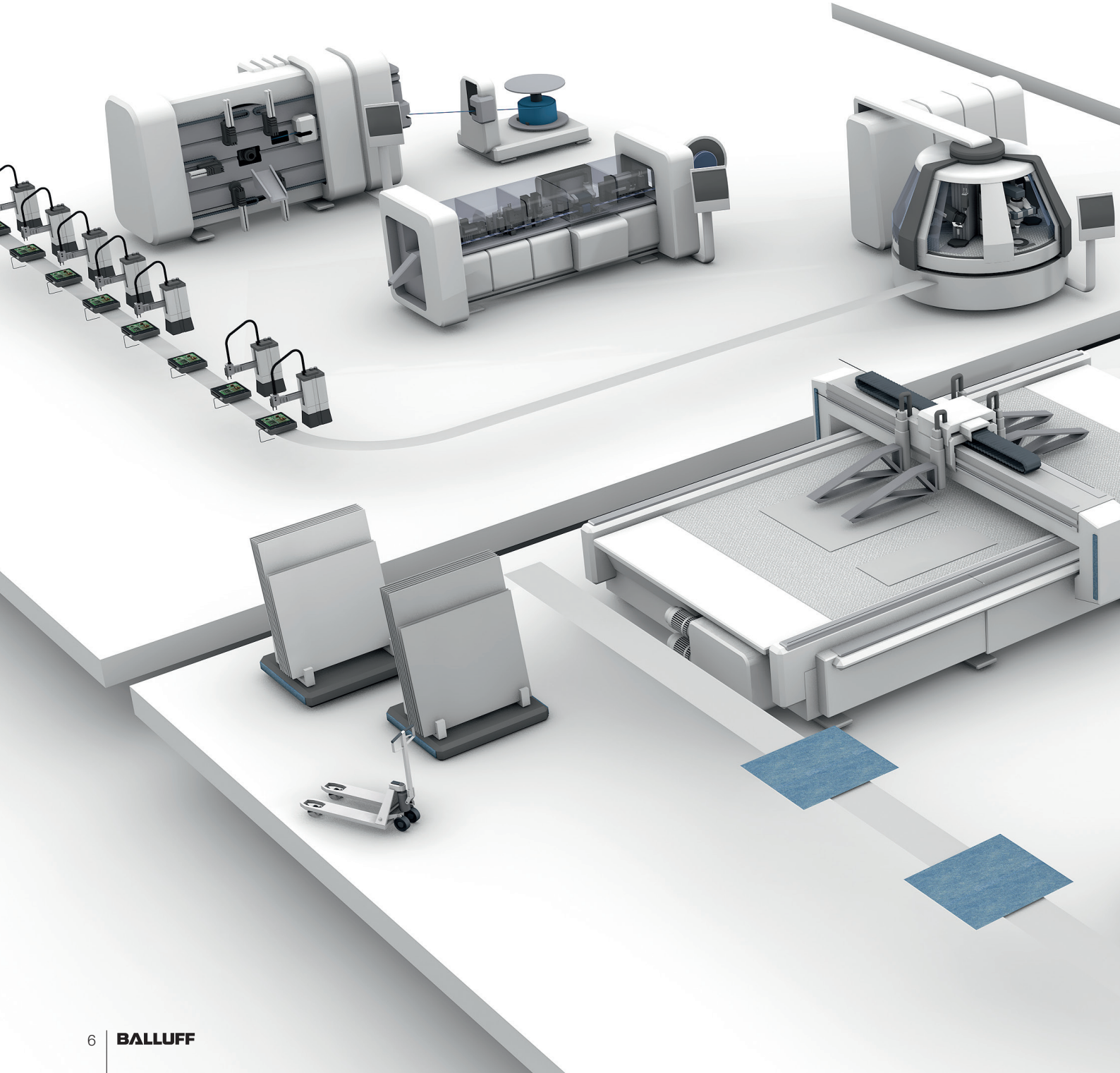

Industrial-grade for harsh environments
The wear-free systems are recommended for extreme conditions. They are impact and vibration-resistant, sensitive to dirt and tolerant of electric interference.

Longer transit times
Using the measurement systems with long-term stable tapes reduces downtime and service calls. Expensive, service-intensive and speed-limiting encapsulations, such as those with optical systems are no longer necessary.

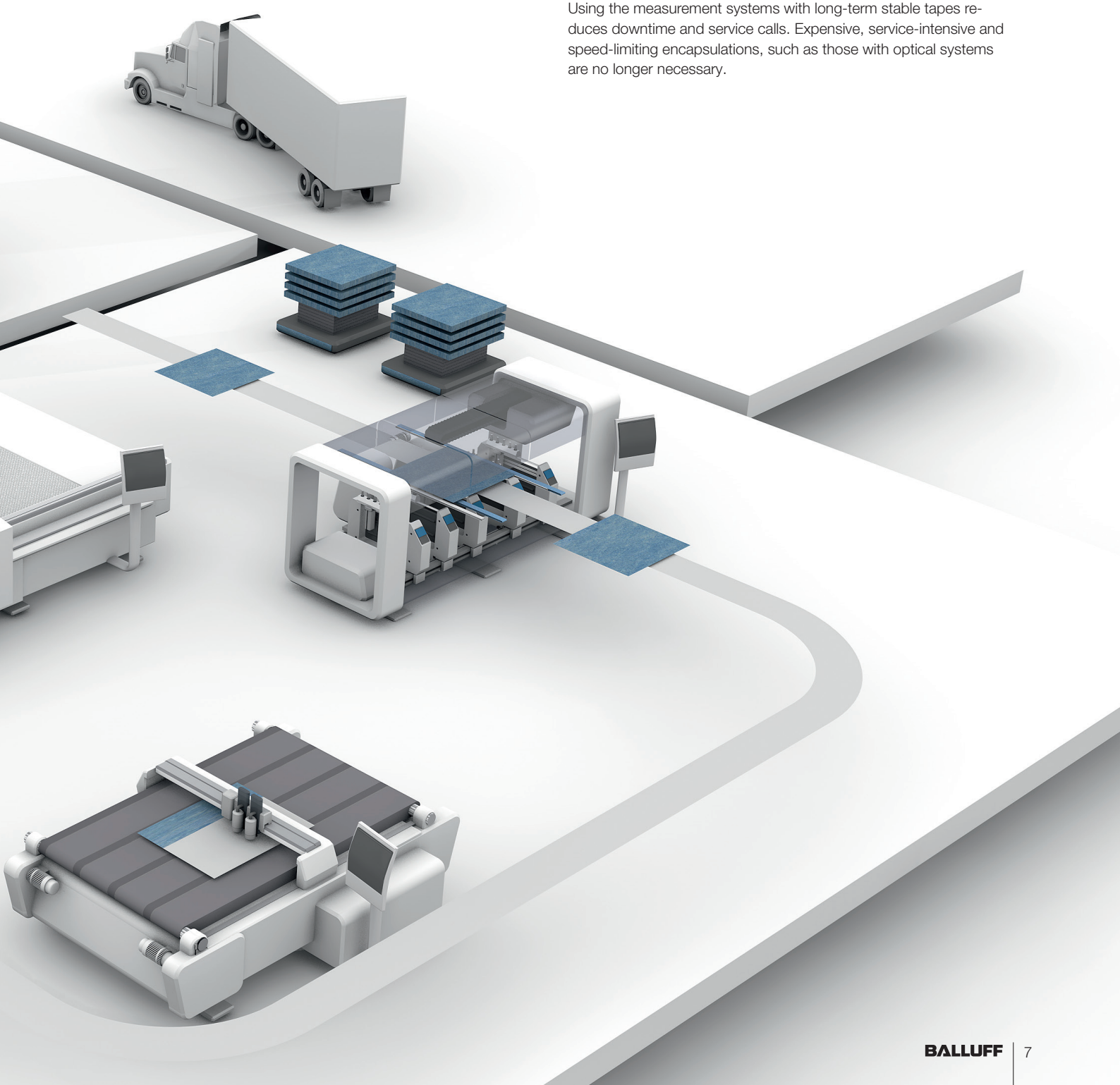

For Long Distances

Accurate cutting in a cut center

In cut centers up to 20 m long, workpieces must be cut to the right sizes lengthwise and crosswise. The different axis movements have to be followed accurately to ensure a precise cut.
Absolute, magnetically coded position and angle measurement systems BML-S1G ensure high precision on water jet cutters, laser cutting centers and in wood processing. Their durable metal housing – encapsulated with stainless steel on the bottom – guarantees protection against electromagnetic influences and ensures reliable operation, even in very dirty environments. The stainless steel cover strip protects the tape, which is inserted into a groove. This leaves no opportunity for dirt, liquids or metal shavings to find hold.

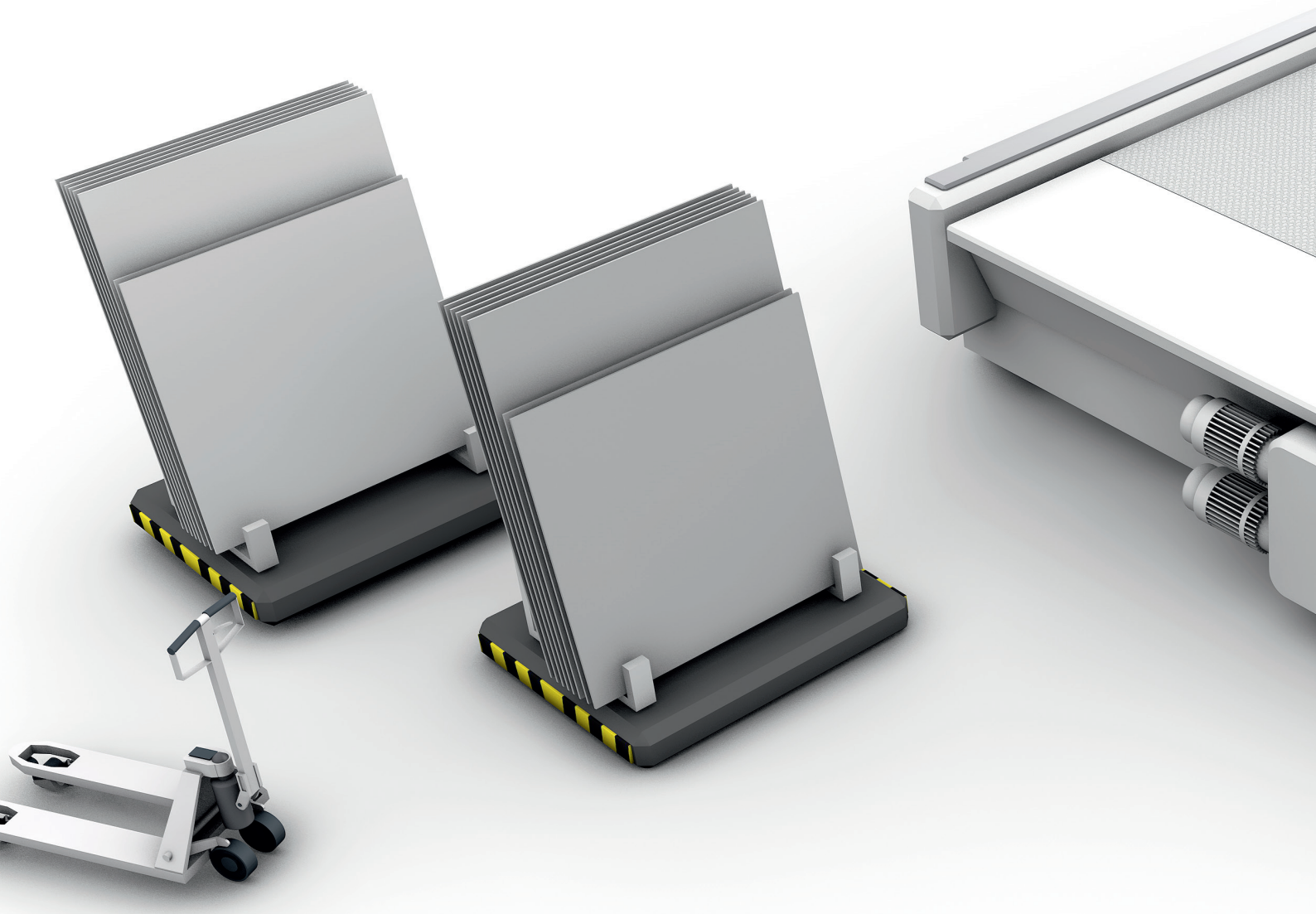

Monitoring lengthwise and crosswise contact points and cutting dimensions
Thanks to Balluff Permagnet® technology, BML-S1G monitor both the lengthwise and crosswise contact points stops of every workpiece and the cutting dimensions very effectively. The high accuracy makes it possible to monitor slippage on the longitudinal axis and make adjustments. They offer a high resolution of 1 µm with measuring lengths of up to 48 m. Their absolute coding means the position value is available immediately after the device is switched on. This ensures fast startup.

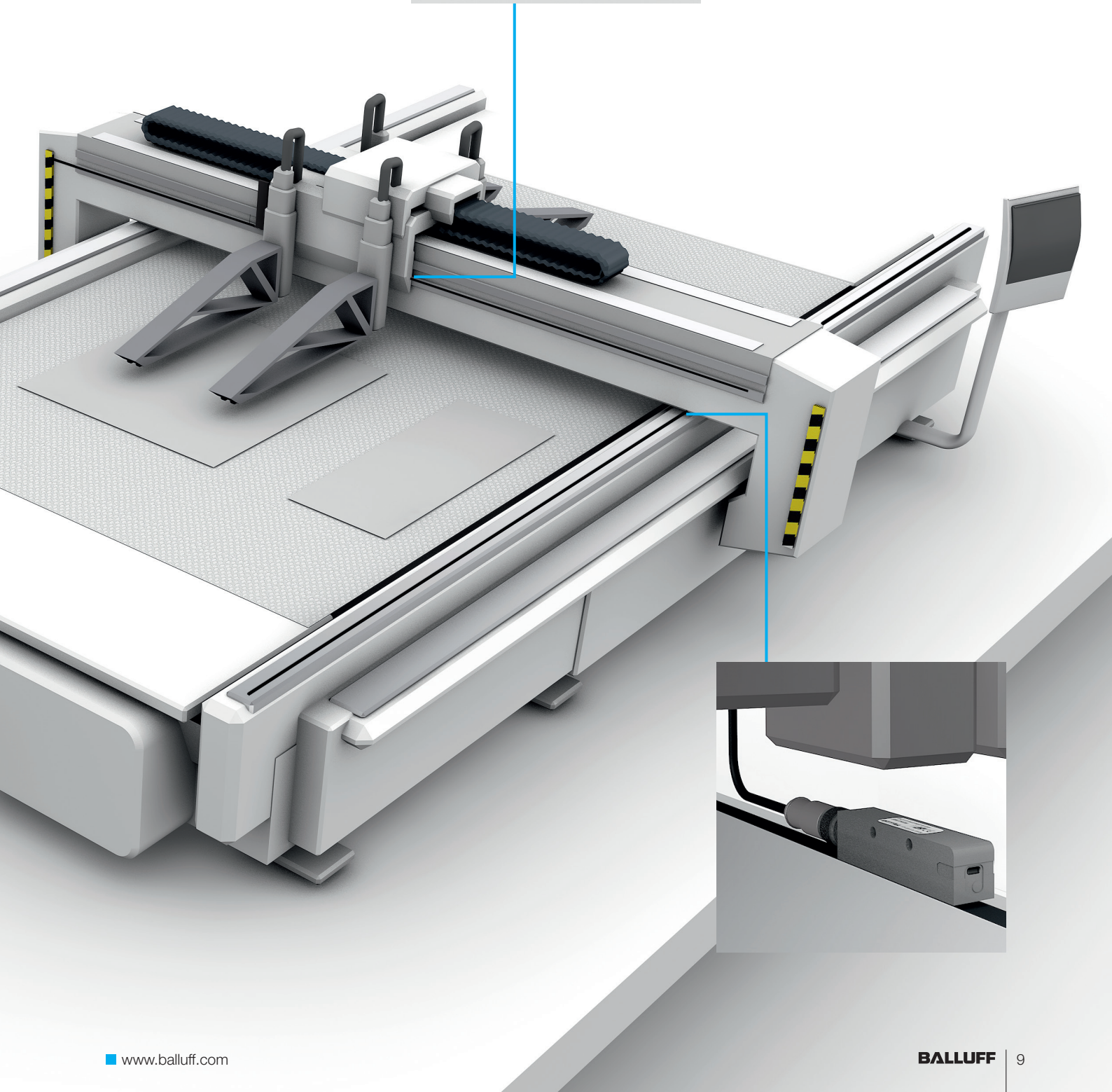

Extremely Precise – Mini-sensor

First-class quality in almost no time

Precision measurement under adverse conditions
Perfect imprinting, engraving or milling of the customized workpieces requires exceptional accuracy, both during size formatting and during subsequent machining. First-class quality is ensured only if both work smoothly.

Fast format change
For changing formats, the magnetically coded position and angle measurement system supports a speedy conversion. The precise position information allows for an automated format change. This enables optimal and fast adaptation to individual applications, increases their flexibility and ensures you have the best quality.

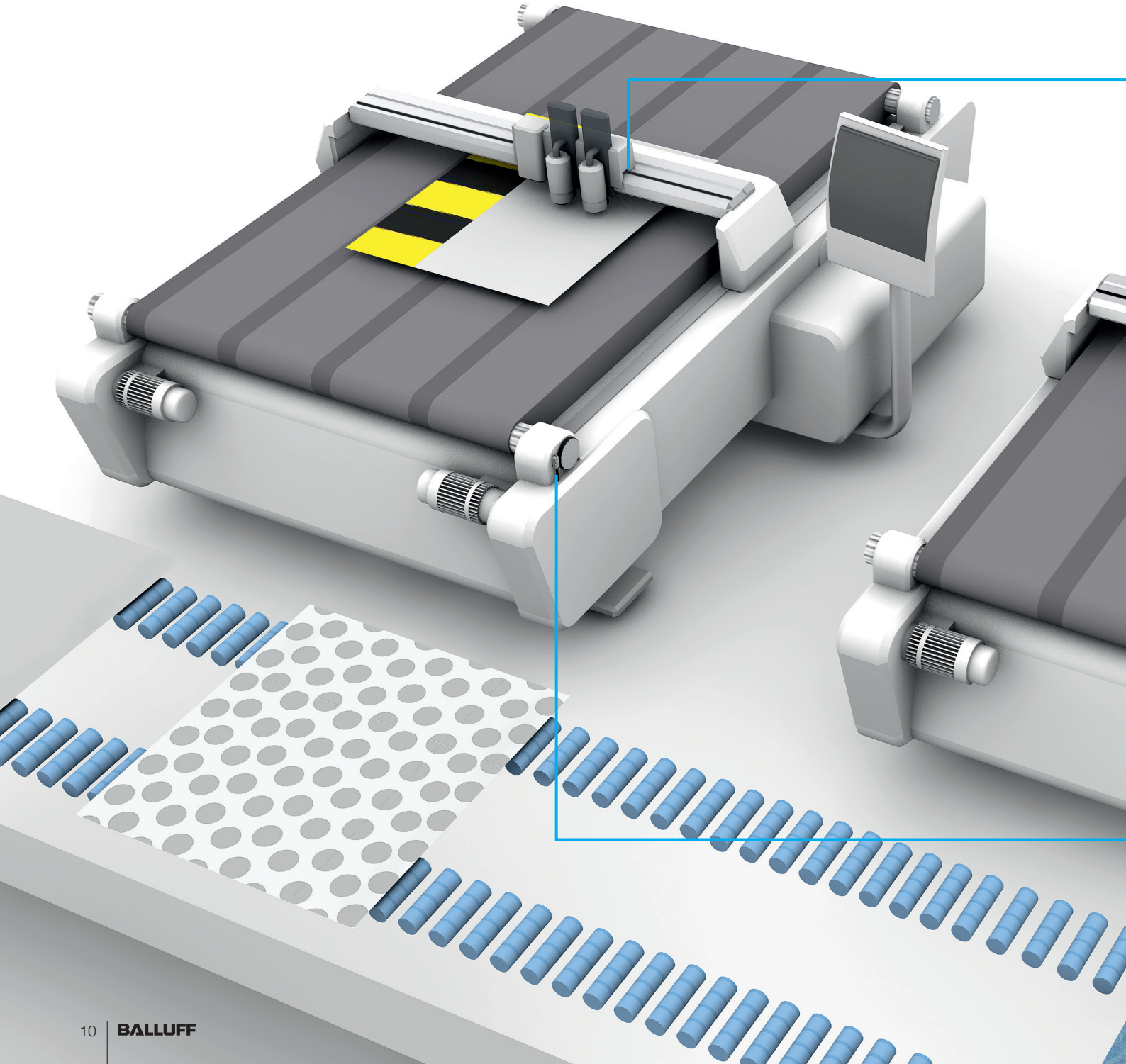

Unparalleled compact sensors – protected and easy to install
Compact magnetically coded position and angle measurement systems BML-S1F provide flawless machining. Their precision measurement is not impeded by ink vapors when printing or by dust and dirt when engraving or milling. Even cleaning agents do not influence the measurement result. The unparalleled compact sensors are installed in a protected position and the Permagnet® tape is covered by a stainless steel strip. This results in optimal use of the available space. The sensor head can be installed parallel or perpendicular to the tape.

Accurate positioning
The position of the processing slide is measured in real time and enables outstanding results thanks to the high accuracy of the BML-S1F.

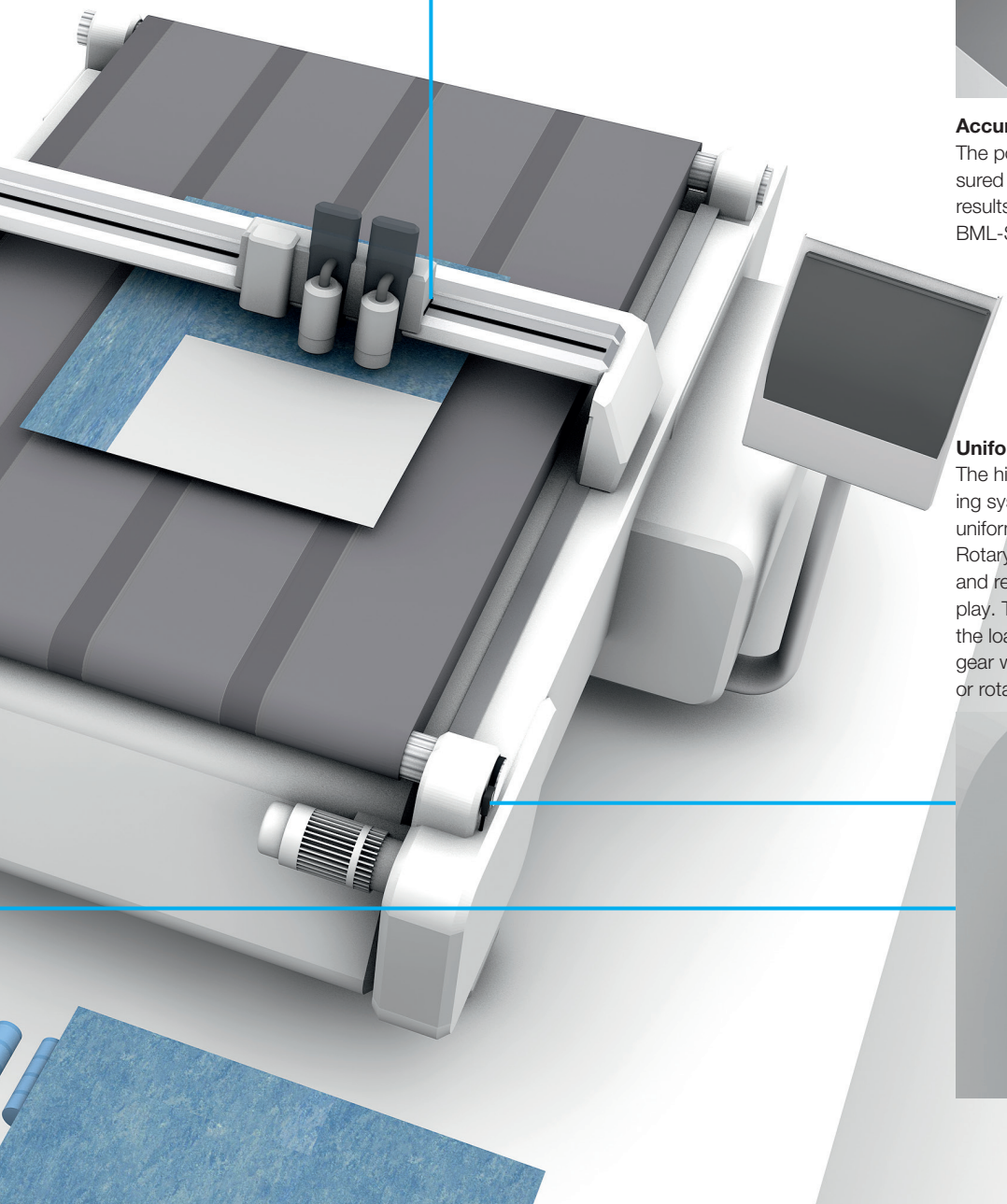

Uniform plate feed
The high-resolution, incremental measuring systems control the infeed and ensure uniform feed.
Rotary measurements take place precisely and reliably even in the presence of lateral play. Their absolute measurement directly at the load eliminates the play of the gear and gear wheels. The tape can be used for linear or rotary applications.

At High Speed

Unsurpassed in a drilling and milling center

In a fast cycle
Speed is required when machining workpieces in drilling and milling centers. This is true for both the drilling and milling as well as the monitoring measurement system. Correct positioning and accurate tool guidance are the top priority.

High-speed interface
BiSS-C – bidirectional!
The absolute signal of the BML-S1G does not require any reference runs and the selectable real-time signal, in addition to the SSI output signal, supports fast applications in a closed control loop. Alternatively, BML-S1G can be used bidirectionally with the brand new BiSS-C high-speed interface, using all of the advantages of the new technology. The BML-S1G can also be reparameterized later on when upgrading the controller from SSI to BiSS-C, since both interfaces are hardware-compatible.

With self-diagnostics
The self-diagnostic function of the BML-S1G guarantees fast error detection, ensuring that downtimes are kept to a minimum when commissioning or in the case of error. The systems are easy to set up thanks to their robust tolerances and the new error codes that can be read out using LEDs or the new bidirectional BiSS-C protocol.

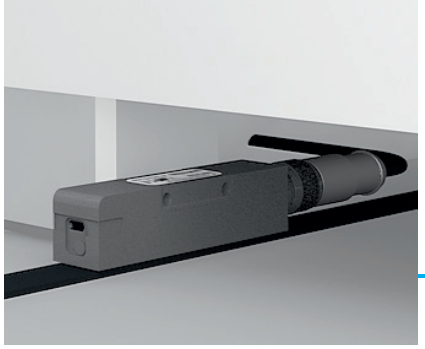

Customized solutions
If multiple BML-S1Gs are used, an interface-converter is available (e.g. SSI on EtherCAT). Touch-displays with customer-specific interfaces are also available.

Accurate positioning of the linear processing axis
In fast applications, absolute, magnetically coded position measurement systems BML-S1G with high resolution enable precise measurements of long lengths. For accurate positioning of the different linear axes, any number of these compact sensors can be placed on a measuring tape at lengths of 20 m or more. This ensures the quick workpiece machining in a drilling center, since they guarantee highly dynamic and accurate positioning of the linear processing axes.

Perfectly adjusting to applications
The user-fabricated magnetic tape magnetized using the Permagnet® process is highly precise and features long-term stability and is available as rolled goods up to 48 m. This means the system can be tailored specific to the application. At the same time, the user-fabrication contributes to reducing stockkeeping costs.

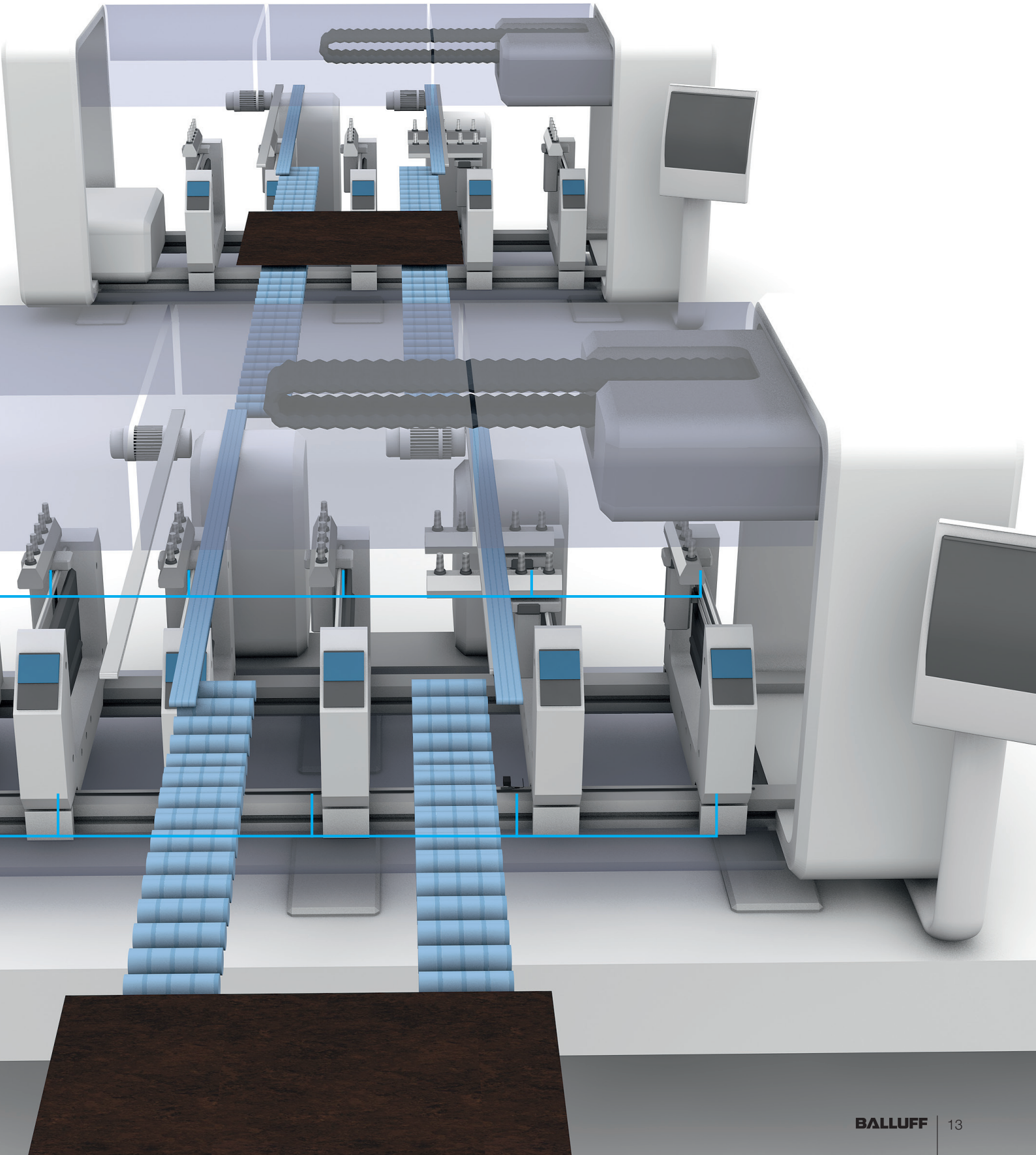

Impact and Vibration-resistant

Perfect for bending and punching

High system accuracy
Combined with highly accurate Balluff electronics, the tapes have excellent system accuracy. In a closed control loop, this enables extremely dynamic, virtually silent movements while also providing exceptional system rigidity. The easily integrable systems in the compact housing can be used to read in rotary and linear systems, parallel or perpendicular over the tape. Fast applications are supported through their real-time interfaces.

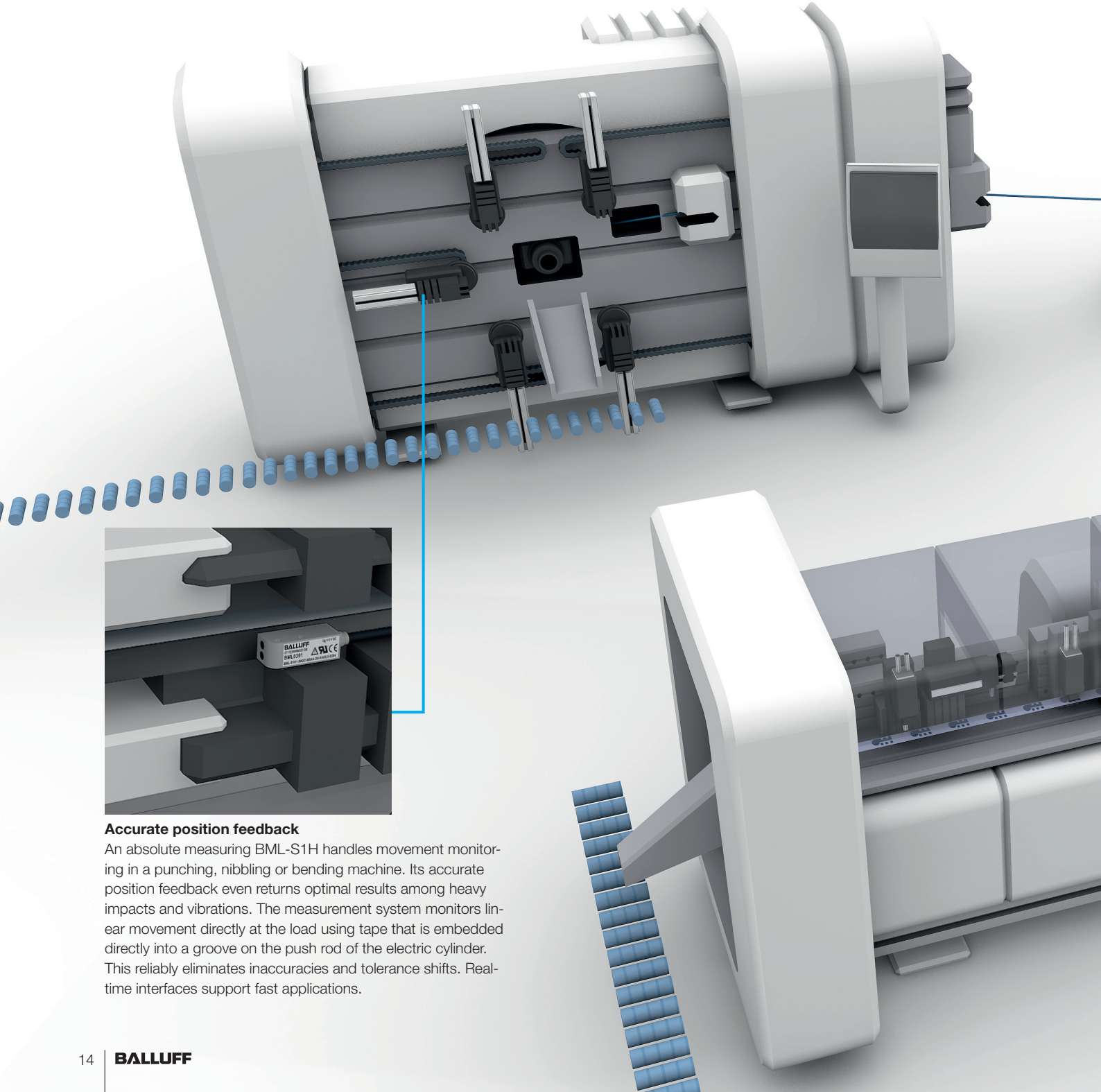

Accurate position feedback
An absolute measuring BML-S1H handles movement monitoring in a punching, nibbling or bending machine. Its accurate position feedback even returns optimal results among heavy impacts and vibrations. The measurement system monitors linear movement directly at the load using tape that is embedded directly into a groove on the push rod of the electric cylinder. This reliably eliminates inaccuracies and tolerance shifts. Real-time interfaces support fast applications.

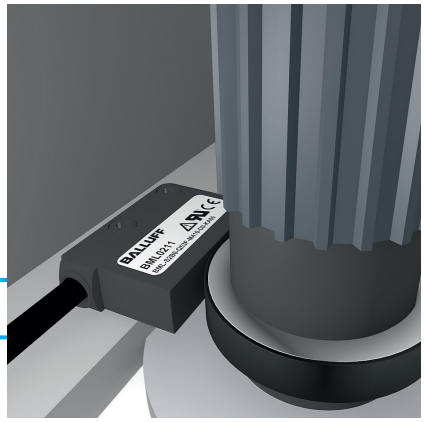

Ring-shaped tape for speed and angle monitoring

The universally applicable incremental position measurement system BML-S2E with ring-shaped tape for speed and angle monitoring returns optimal results at the material feed of a punching machine. On a reel, it checks how much material has been unwound using rotational motion. The extremely robust special plastic of the housing is long-term stable and resistant to dirt and liquids.

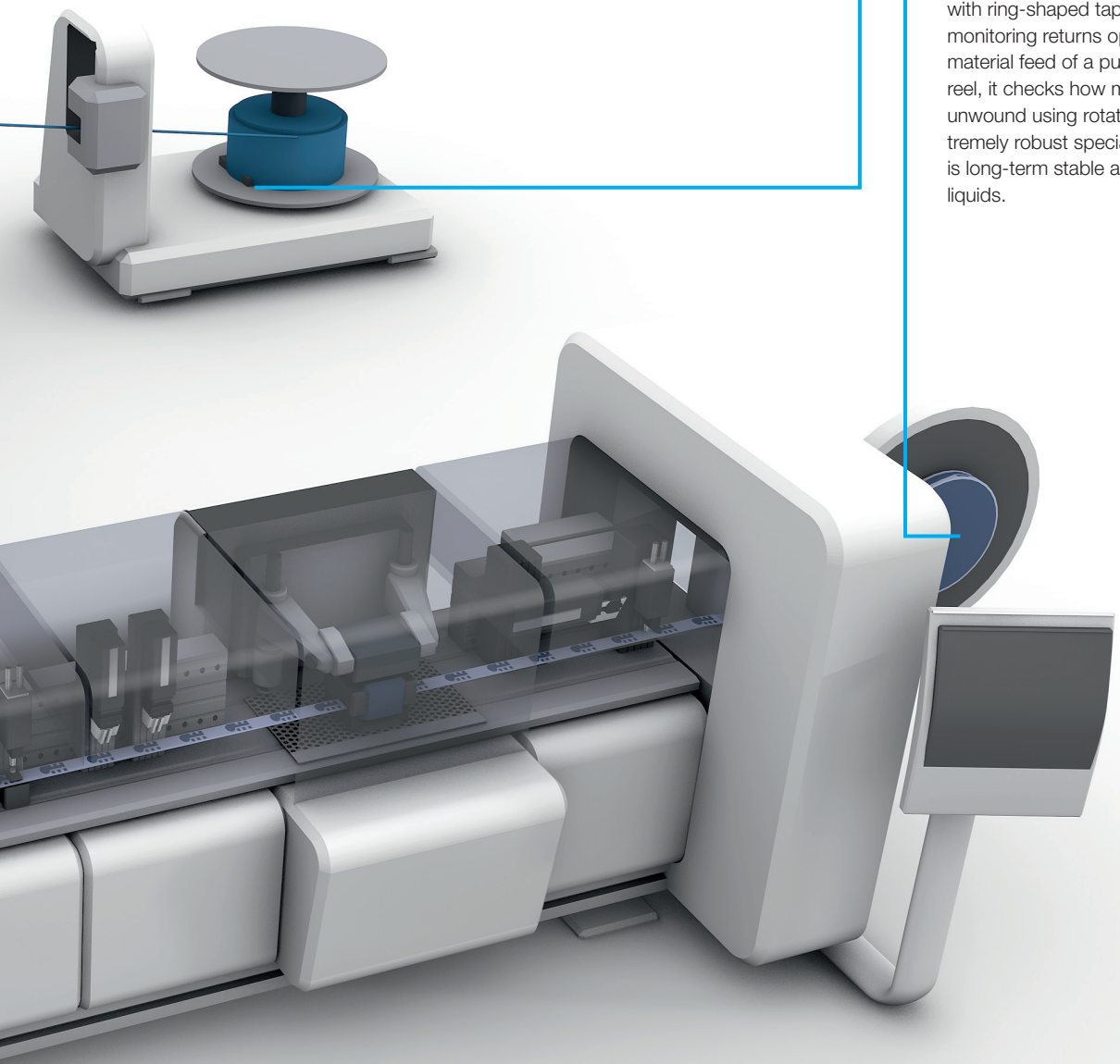

For Maximum Control Dynamics

Positioning and monitoring workpiece carriers perfectly in real time

Monitoring linear motors
Linear drives used in machining centers are guided with precision using absolute or incremental position measurement systems BML. The resolution and accuracy can be precisely selected to facilitate this. The incremental systems also allow reference points to be specified according to individual requirements.

The excellent magnetization quality of Permagnet® tapes ensures stable measurement over the long term and provides a long service life for the system. This also gives you the option of placing the tapes surprisingly close to residual magnets. The outstanding accuracy ensures maximum stability of the motor in a closed control loop, saves electricity and enables dynamic, virtually silent movement.

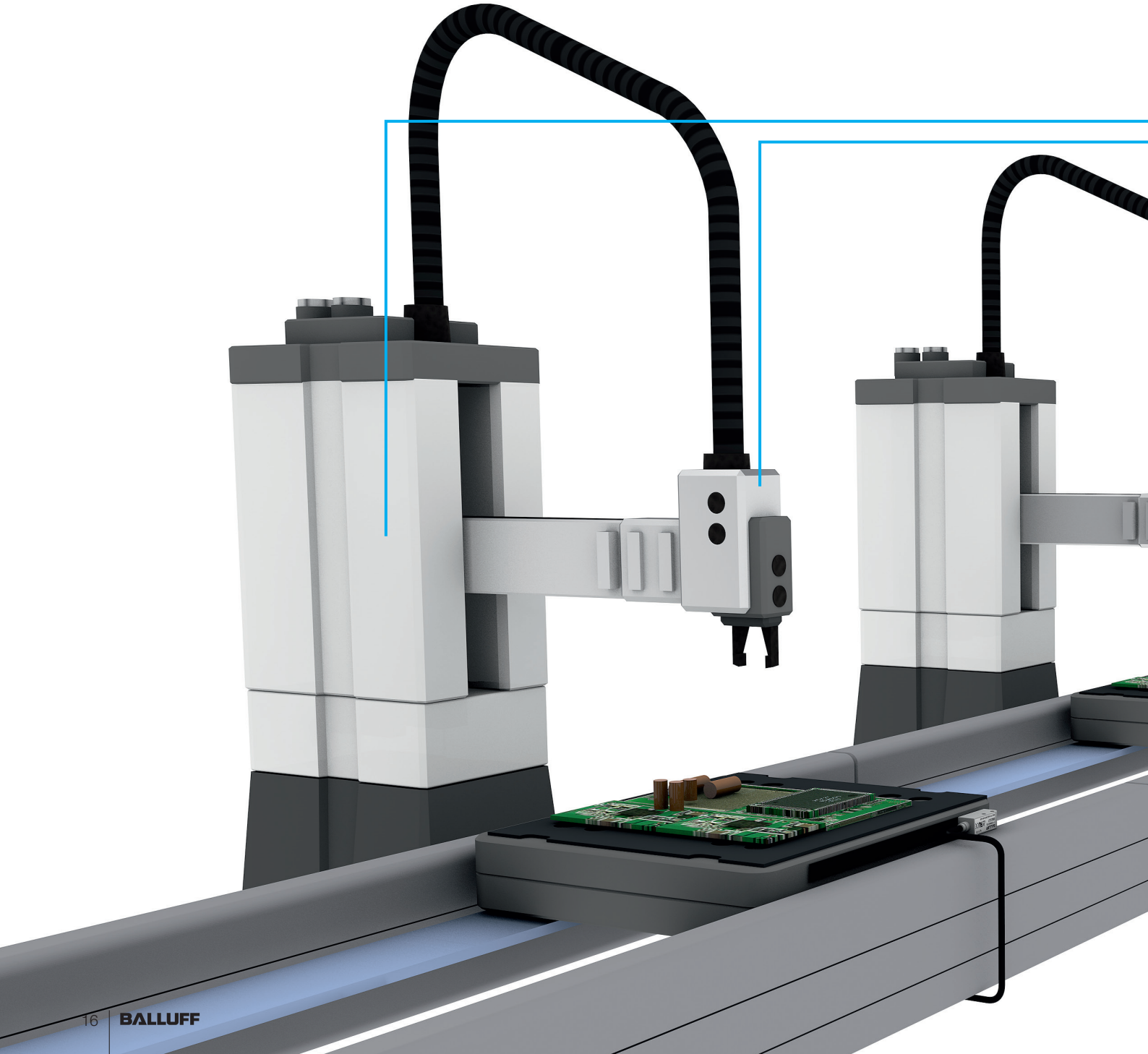

Versatile installation saves room
Pick-and-place machines are used to cycle all of the steps optimally and execute them with precision when processing on a transfer line. From handling small parts to installing electronics to assembling modules. The first bit of valuable space is saved in the design of pick-and-place machines with the choice of sensor installation parallel or perpendicular to the tape, keeping the need for high-precision, ground surfaces to a minimum.

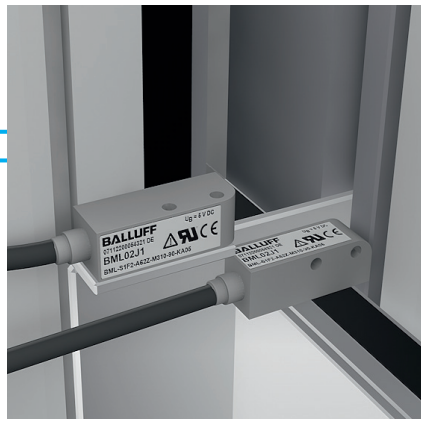

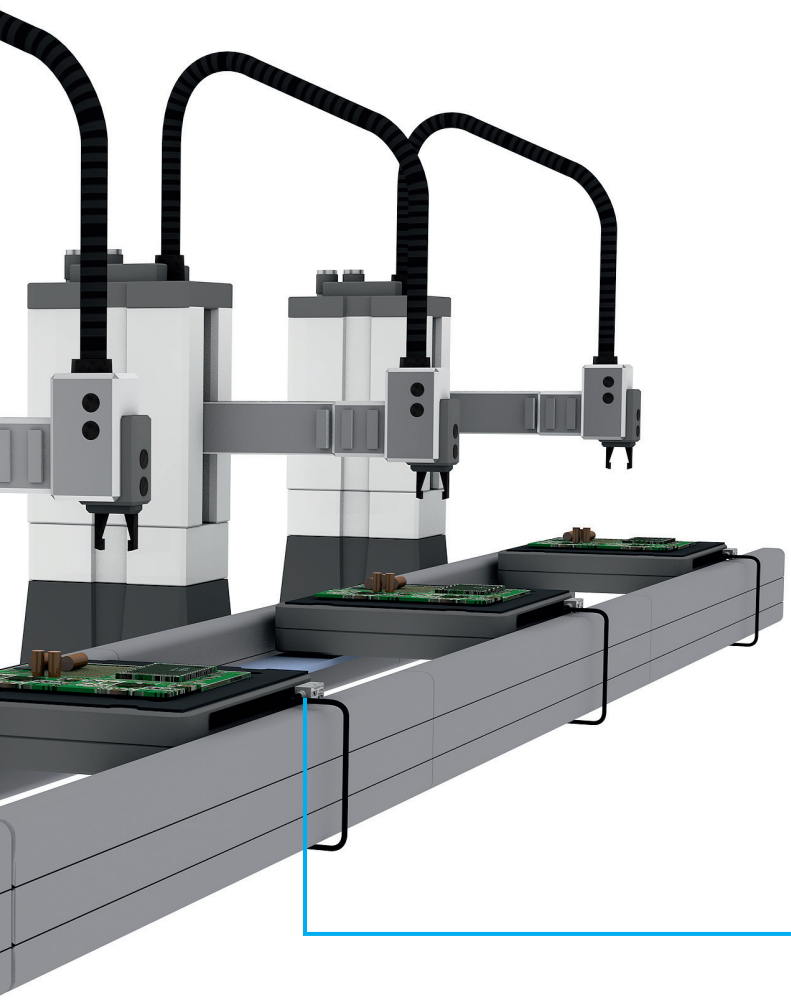

Extremely fast transfer of up to 10 m/s
Workpiece carriers must be positioned very precisely, assigned clearly and routed from station to station quickly. The absolute BML-S1H and incremental BML-S1F ensure precise, reliable results in real time. They ensure an extremely fast transfer at high speeds of up to 10 m/s. Incorrectly assigned workpiece carriers are reliably identified and discarded for error correction. This is how highly accurate systems enable maximum control dynamics. The tapes of incremental BML-S1Fs can each be magnetically labeled and can be clearly identified as a result. Their magnetic fine interpolation track ensures extremely accurate positioning at the same time.

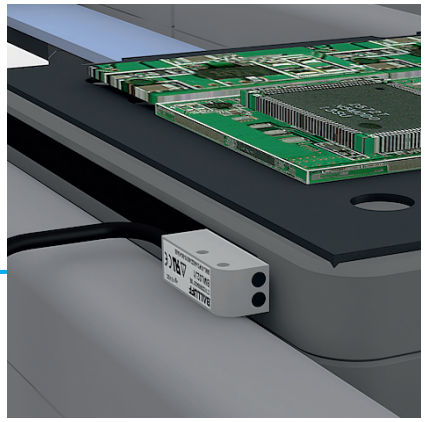

Rotary Indexing Center Precision

Excellent results at high speeds

Accurate positioning of workpieces and spindles
The movement axes of workpieces and processing spindles in a rotary indexing center have to be monitored reliably: The precise positioning of the workpieces and the movement of the spindles in relation to the workpiece.

Highly dynamic, reliably measurement systems are required to monitor these fast, short movements.
Exceptional accuracy is required for good results and narrow tolerances. That is the only way to achieve high throughput.

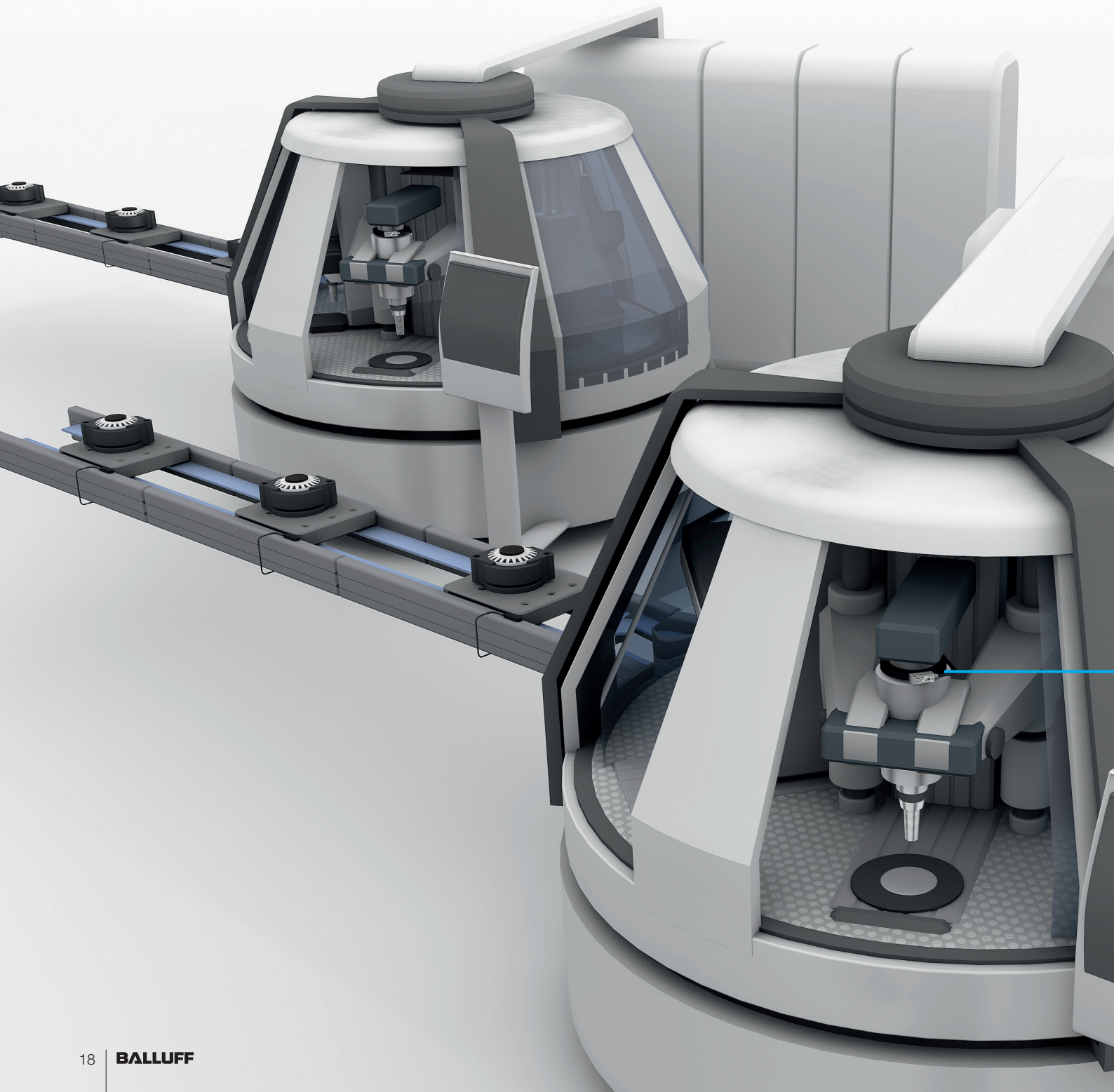

The absolute BML-S1H with a precise tape and high resolution masters these tasks with flying colors. High speeds are ensured by a fast BiSS-C interface or an SSI interface with a separate analog real-time signal. Like all absolute systems, the BML-S1H is available immediately after a machine breakdown without a reference run.
Its robust metal housing and the stainless steel cover of the tape ensure suitability for industrial applications even in dirty environments. The extremely small design can be installed parallel or perpendicular to the tape and guarantees easy integration into the machine concept.

High-speed spindle monitoring
For reliable processing, the rotational speed and angle of the tool spindles have to be monitored reliably. This requires systems with analog output signals. Encoder systems that are highly precise, very expensive and difficult to set up due to their low tolerances are often used for this task.

The BML-S1F is a cost-effective, reliable and precise alternative for high-speed spindle monitoring. This allows surface speeds of up to 100 m/s (up to 40,000 rpm) to be highly accurately and reliably monitored using a suitable ring tape. Reference runs and angle detection, such as for changing tools, are possible at low speeds using an integrated reference sensor. Liquids and grease have no effect on the fully enclosed metal housing.

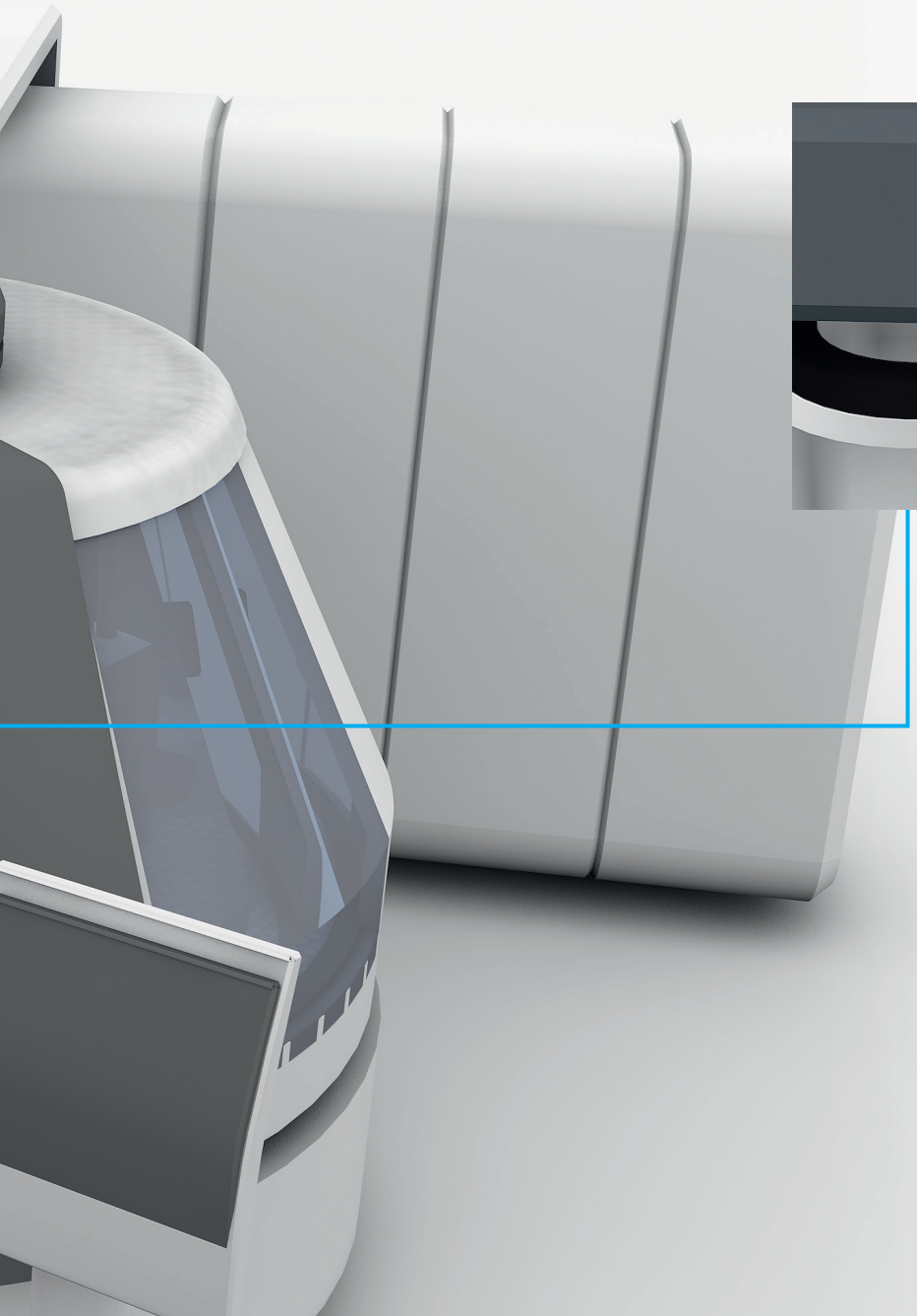

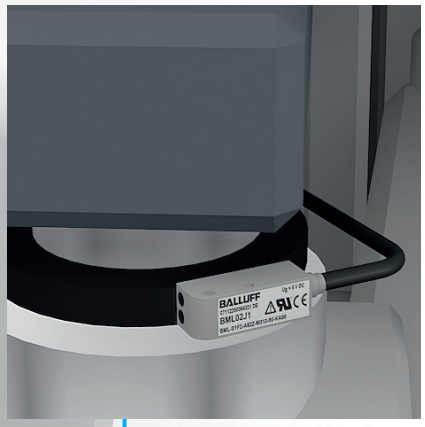

Absolute Series

BML-S1G and BML-S1H

BML-S1G – high-resolution for long lengths
The absolutely coded position measurement system BML-S1G offers high resolutions at large measuring lengths.
The rugged metal housing with stainless steel-encapsulated floor protects against electromagnetic influences and allows for reliable operation even in heavily contaminated environments. With the absolute coding, the position value is available immediately after the system is switched on. The installation tolerances and the LED feedback make it very easy to set up and install the system. The diagnostic function enables fast error detection and thus provides for short downtimes during setup and when errors arise.

BML-S1H – high-resolution, compact design
The magnetically coded position and angle measurement system BML uses the S1H sensor series to provide high-resolution systems in a robust metal housing.
By means of the absolute position detection, the position is immediately output even if the supply voltage fails and the system is switched on again, without a reference run. The particularly compact design and use parallel or perpendicular to the tape enables integration even under very tight installation conditions.

Series		
Output signal		
Data format		
Resolution		
Lengthwise approach direction	**Order code**	
	Part number	
Crosswise approach direction	**Order code**	
	Part number	
Repeat accuracy		
Overall system accuracy		
Supply voltage		
Current consumption at 5 V supply voltage		
Max. read distance sensor/tape		
Max. measuring length		
Signal period fine interpolation track		
Max. travel speed		
Sampling rate $f_{Standard}$		
Operating temperature		
Storage temperature		
Housing material		
Connection		
Degree of protection as per IEC 60529		

All data in conjunction with tape BML-M02-A55...

① Variants with 24, 25 or 26 bits can also be ordered.
② We also feature variants with 0.98, 2, 5 or 10 µm.

Accessories	
Series	
Order code	
Part number	
Length, order in cm	
Measuring length	
Magnetic tape material	

				
	BML-S1G0	**BML-S1G0**	**BML-S1H**	**BML-S1H**
	Absolute: SSI and additional real-time signal sine/cosine 1 V_{pp} (also with RS422)	Absolute: BiSS-C bidirectional, without an additional real-time signal (also with sine/cosine 1 V_{pp} or RS422)	Absolute: SSI (also with BiSS-C bidirectional), additional real-time signal sine/cosine, 1 V_{pp}	Absolute: SSI (also with BiSS-C bidirectional), additional real-time signal sine/cosine, 1 V_{pp}
	32-bit ①	32-bit ①	16-bit	18-bit
	1 µm ②	1 µm ②	1/1.024 µm per LSB (= 0.98 µm)	1/1.024 µm per LSB (= 0.98 µm)
	BML041H	**BML042T**	**BML0391**	**BML0393**
	BML-S1G0-S7ED-M5EA-D0-S284	BML-S1G0-B7ED-M5EZ-90-S284	BML-S1H1-S6QC-M3AA-D0-KA00,3-S284	BML-S1H1-S6QC-M3CA-D0-KA00,3-S284
			BML0392	**BML0394**
			BML-S1H2-S6QC-M3AA-D0-KA00,3-S284	BML-S1H2-S6QC-M3CA-D0-KA00,3-S284
	±1 increment	±1 increment	±1 increment	±1 increment
	±20 µm	±20 µm	±7 µm	±7 µm
	5 V ±5% and 10...28 V DC	5 V ±5% and 10...28 V DC	5 V ±5%	5 V ±5%
	< 70 mA at 24 V DC supply voltage	< 70 mA at 24 V DC supply voltage	< 90 mA + Controller current consumption, at 120 Ω load resistance	< 90 mA + Controller current consumption, at 120 Ω load resistance
	0.8 mm (without cover strip)	0.8 mm (without cover strip)	0.35 mm (without cover strip)	0.35 mm (without cover strip)
	48 m	48 m	64 mm	256 mm (longer on request)
	2 mm	2 mm	1 mm	1 mm
	10 m/s	10 m/s	5 m/s	5 m/s
	50 kHz (SSI)	10 MHz (BiSS-C)	50 kHz (SSI), 10 MHz (BiSS-C)	50 kHz (SSI), 10 MHz (BiSS-C)
	-20...+70 °C	-20...+70 °C	-20...+80 °C	-20...+80 °C
	–25...+85 °C	–25...+85 °C	-20...+80 °C	-20...+80 °C
	Die-cast zinc, coated and rust-free stainless steel	Die-cast zinc, coated and rust-free stainless steel	Aluminum and rust-free stainless steel	Aluminum and rust-free stainless steel
	M12 connector, 12-pin	M12 connector, 12-pin	0.3 m PUR cable with M12 connector, 12-pin	0.3 m PUR cable with M12 connector, 12-pin
	IP 67	IP 67	IP 67	IP 67

				
	Magnetic tape	**Magnetic tape**	**Magnetic tape**	**Magnetic tape**
	for BML-S1G	for BML-S1G	for BML-S1H with 64 mm measuring length	for BML-S1H with 256 mm measuring length
	BML04P4	**BML04R5**	**BML039J**	**BML039K**
	BML-M02-A55-A0-M0100-E	BML-M02-A55-A0-M1000-E	BML-M02-A33-A3-M0009-A	BML-M02-A33-A3-M0028-C
	1 m, max. 48 m	10 m, max. 48 m	90 mm	280 mm
	Order length, minus the length of the sensor head	Order length, minus the length of the sensor head	64 mm	256 mm
	Rubber ferrite, stainless steel	Rubber ferrite, stainless steel	Rubber ferrite, stainless steel	Rubber ferrite, stainless steel

Incremental Series

BML-S1F and BML-S2E

BML-S1F – high-resolution, unparalleled compact sensor head
With the S1F sensor heads, the magnetically coded position and angle measurement system BML provides high-resolution designs in robust metal housings. They also detect reference points on the tape. The S1F series can be used either parallel or perpendicular. The S1F series has an extremely compact design and is therefore easy to integrate in systems with restricted installation space.

BML-S2E – universal
The S2E sensor heads on the magnetically coded position and angle measurement system BML provide three systems – for optimal adaption to your measurement task.
Resolution and accuracy can be appropriately selected depending on the application. Integration of reference points is also possible. All three systems have a compact design and the same dimensions throughout the series, making them extremely versatile to integrate.

Series		
Output signal		
Data format		
Resolution		
Lengthwise approach direction	**Order code**	
	Part number	
Crosswise approach direction	**Order code**	
	Part number	
Repeat accuracy		
Overall system accuracy		
Supply voltage		
Current consumption at 5 V supply voltage		
Max. read distance sensor/tape		
Max. measuring length		
Signal period fine interpolation track		
Max. travel speed		
Sampling rate		
Operating temperature		
Storage temperature		
Housing material		
Connection		
Degree of protection as per IEC 60529		

All data in conjunction with tape BML-M02-A55...

① We also feature variants with 2, 5 or 10 µm.
② We also feature variants with 10, 25 or 50 µm.
③ Variants with 2, 5, 10, 15 and 20 m PUR cable or 0.3 m cable with M12 connectors can also be ordered.

Accessories		
Series		
Order code		
Part number		
Length (order in cm)		
Ring	Number of poles	
	Pole width	
Magnetic tape material		

* Order length: Minus the length of the sensor head

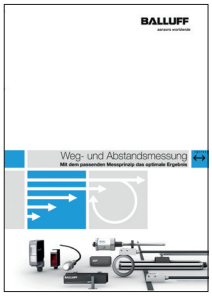

Refer to our Linear Position Sensing and Measurement catalog or visit **www.balluff.de** for more information



	BML-S1F	**BML-S1F**	**BML-S2E**
	Incremental: Sinusoidal real-time signal A, /A, B, /B, Z, /Z, without reference signal (also individually, fixed-periodic)	Incremental: Digital square-wave signal RS422 A, /A, B, /B, Z, /Z, Reference signal: Pole-periodic (also without, individually, fixed-periodic)	Incremental: Digital square-wave signal A, B, Z (HTL), also: A, /A, B, /B, Z, /Z (RS422), reference signal: Pole-periodic (also without, individually, fixed-periodic)
	Sine/cosine V_{pp}	RS422 to DIN 66259	Level as supply voltage 10…30 V
	Depends on evaluation, up to 0.25 µm	1 µm ①	5 µm ②
	BML-S1F1-A62Z-M300-90-KA05	BML-S1F1-Q61D-M320-D0-KA05	BML-S2E0-Q53F-M420-D0-KA02
	BML-S1F2-A62Z-M300-90-KA05	BML-S1F2-Q61D-M320-D0-KA05	
	±1 increment	±1 increment	±1 increment
	±10 µm	±10 µm	±100 µm
	5 V ±5%	5 V ±5%	10...30 V or 5 V ±5%
	< 50 mA + Controller current consumption, at 120 Ω load resistance	< 50 mA + Controller current consumption, at 120 Ω load resistance	< 50 mA + current consumption of the controller (depending on internal resistance)
	0.35 mm (without cover strip)	0.35 mm (without cover strip)	2 mm (without cover strip)
	48 m	48 m	48 m
	1 mm	1 mm	5 mm
	20 m/s, > 20 m/s on request	5 m/s (up to 20 m/s can be selected)	20 m/s
	Real time	Real time	Real time
	-20...+80 °C	-20...+80 °C	-20...+80 °C
	-20...+80 °C	-20...+80 °C	-20...+80 °C
	Aluminum and stainless steel	Aluminum and stainless steel	PBT
	5 m PUR cable ③	5 m PUR cable ③	2 m PUR cable ③
	IP 67	IP 67	IP 67



	Magnetic Tape	**Magnet ring tape**	**Magnet ring tape**
	for BML-S1F	for BML-S1F	for BML-S2E
	BML001R	**BML01KM**	**BML04E2**
	BML-M02-I34-A0-T2400-R0000	BML-M31-I30-A0-M075/060-R0	BML-M33-I40-A0-M025/020-R0
	24 m, max. 48 m *		
		238	16
		1 mm	5 mm
	Rubber ferrite, stainless steel	Elastomer on stainless steel, with fit H7	Plastic

BALLUFF

sensors worldwide

Systems and Service

Industrial Networking and Connectivity

Industrial Identification

Object Detection

Linear Position Sensing and Measurement

Condition Monitoring and Fluid Sensors

Accessories

Headquarters
Balluff GmbH
Schurwaldstrasse 9
73765 Neuhausen a.d.F.
Germany
Phone +49 7158 173-0
Fax +49 7158 5010
balluff@balluff.de

www.balluff.com

Doc. No. 918822/Mat. No. 242985 EN
C14; subject to modification.