Kendrion – your solution provider

Kendrion develops, manufactures and markets high-quality electromagnetic and mechatronic systems and components for industrial and automotive applications. A modern enterprise with a global perspective has been formed of the traditional brands Binder, LINNIG and Kuhnke.

Kendrion is a global player with worldwide presence. Our distribution network and production locations guarantee worldwide availability for our customers. Whether America, Europe or Asia – we are well established in the markets!

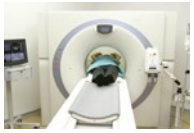

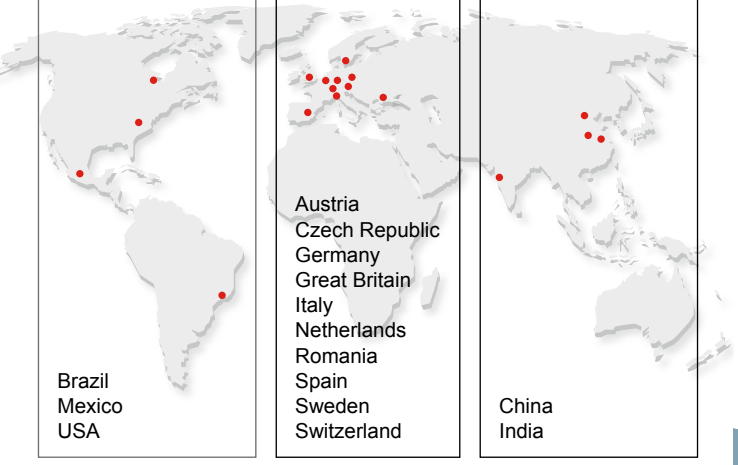

KENDRION | AUTOMOTIVE

WE MAGNETISE THE WORLD

We are convinced to provide you the optimal solution!

Developments in technology, growing demand for environmentally friendly vehicles and strict emissions requirements pose a challenge which Kendrion Passenger Cars has risen to. Energy saving has been the big focus of our latest work, along with a drive to cut CO_2 emissions and reduce fuel consumption. Kendrion passionately identifies with products of the customers.

If you do not find what you are looking for, please feel free to contact us!

Kendrion (Villingen) GmbH
Wilhelm-Binder-Strasse 4-6
78048 Villingen-Schwenningen
Germany
Tel: +49 7721 877-1408
Fax: +49 7721 877-1465
sales-pc@kendrion.com
www.kendrion.com

KENDRION | AUTOMOTIVE

WE MAGNETISE THE WORLD

Kendrion – your global expert for fuel and energy savings

PASSENGER CARS BINDER KUHNKE

Fuel systems from Kendrion Passenger Cars: More performance with lower consumption and reduced emissions!

High pressure applications

Common Rail

Pressure Control Valve

Different versions from 1600 to 2000 bar. Precise regulation of rail pressure. Usable for pre-pumpless systems.

High Pressure Valve

Pressure regulation up to 2000 until 2700 bar. Robust design, capable for heavy duty applications.

High Pressure Valve normally closed

Pressure regulation up to 2500 bar. Currentless closed to 320 bar.

Pressure Limiter Valve

Valve relief pressure for safety function. Flexible adjustment of different opening pressures.

Low pressure applications

Common Rail

Volume Control Valve normally closed (flange)

Zero-leakage high precision fuel delivery for efficient combustion.

Volume Control Valve normally closed (thread)

Different connection geometry and axial connector. Flow rate up to 3 l/min.

Volume Control Valve normally closed

Flexible design for different flow rate and average pressure.

Volume Control Valve normally open

Mounted on the pump with a flow rate of max. 5.5 l/min and zero-leakage.

Gasoline Injection Systems

Spill Valve normally open
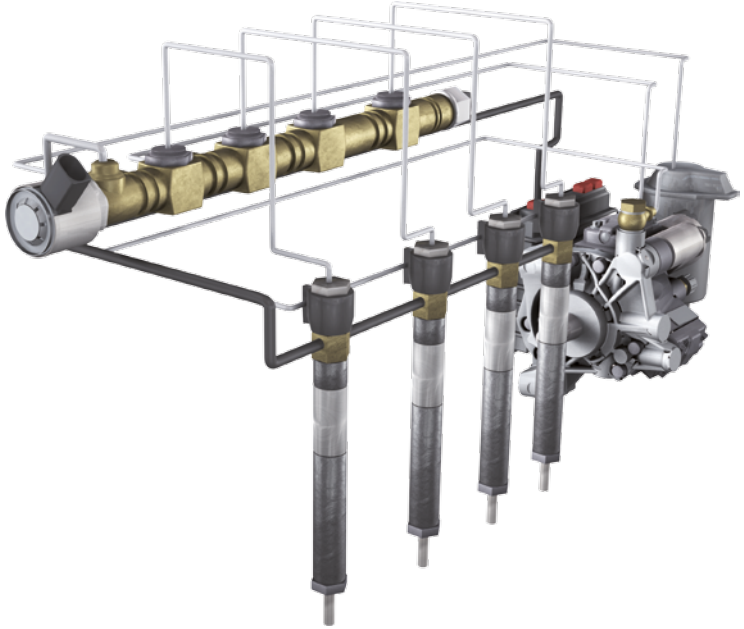
Directly installed on a high pressure gasoline pump. Fast and precise regulation of the fuel volume.