Baumer
Passion for Sensors

Industrial cameras

LXC-20C

Camera Link®, 2 Megapixel, Color
Article number: 11148639

sensor information	
sensor	CMOSIS CMV2000 V3
type	2/3" progressive scan CMOS
resolution	2048 × 1088 px
exposure time	0,03 ... 1000 ms
color filter	RGB Bayer Mosaic
pixel size	5.5 × 5.5 µm
acquisition formats	
image formats, frame rate max.	Full Frame, 2048 × 1088 px, max. 337,0 fps
pixel formats	BayerGB8 BayerGB10
image pre-processing	
analog controls	Gain (0 … 12 dB) Offset (0 … 63 LSB 10 Bit)
color models	Raw Bayer
color processing	NA
interfaces and connectors	
data interface	Camera Link® Full, connector: 2 x Standard SDR26 (Mini CL)
process interface	M8 / 8 pins
power supply	M8 / 8 pins
mechanical data	
material	housing: aluminum
lens mount	C-mount
width	60 mm
height	60 mm
depth	47,95 mm
weight	≤ 285 g
electrical data	
voltage supply range +Vs	12 ... 24 V DC (external power supply) 0 ... 12 V (PoCL)

electrical data	
power consumption	approx. 3,8 W @ 24 VDC approx. 3,8 W @ 12 VDC (PoCL)
environmental conditions	
operating temperature	+5 … +65 °C
humidity	10 … 90 % (non-condensing)
protection class	IP 40

dimension drawing

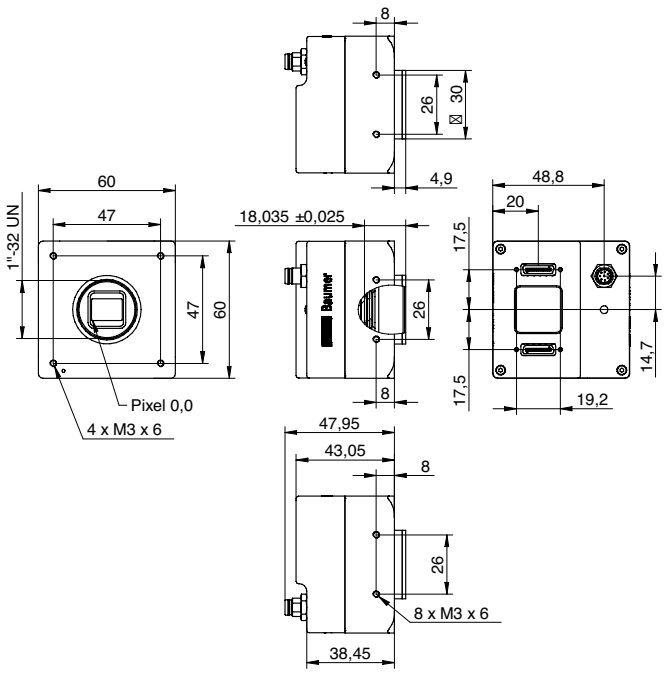

The product characteristics and technical data provided do not express or imply any warranty. Technical modifications and errors reserved.

EN/070316