Baumer
Passion for Sensors

Illumination and accessories

ZVI-TOPLINED1_24VDC_ROT617NM_30°

TOP-LINE-D1 red 617nm 30° 24VDC M8 1-canal
Article number: 11130187

features

- flashable LED bar light
- red (617 nm)
- radiation angle 120°
- 24 V
- M8/4-pin connector (cable has to be ordered separately)
- dimensions: 78 mm × 25 mm × 23 mm housing
- connector and pin assignment suitable for *VeriSens*® XC series

general data	
manufacturer	Büchner Lichtsysteme GmbH
illumination data	
color	red (617 nm)
illumination mode	flashable
mechanical data	
construction design	bar light
dimensions	78 mm × 25 mm × 23 mm
material	aluminium (anodized)
material of cover glass	acrylic
weight	≤ 80 g
electrical data	
number of poles	4
illumination connector	M8 connector
current	≤ 0,2 A
current at flash mode	≤ 0,2 A
voltage at flash mode	≤ 48 V
duty cycle	0-10%
maximum flash duration	1 ms
environmental conditions	
operating temperature	max. 50 °C

dimension drawing

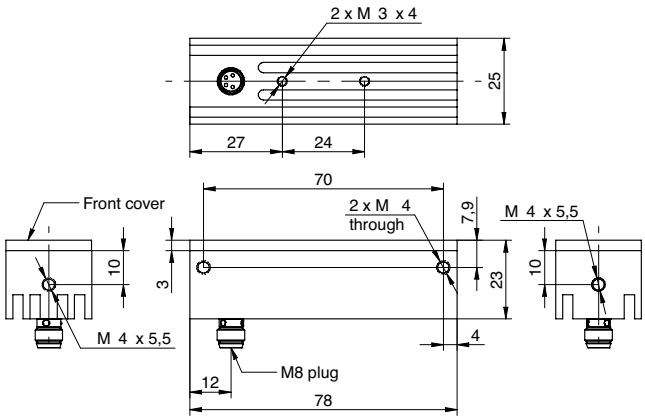

pin assignment

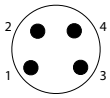

M8	signal
1:	LED +24V (pulsing 24-48 V)
2:	N.C.
3:	LED - (GND)
4:	N.C.

The product characteristics and technical data provided do not express or imply any warranty. Technical modifications and errors reserved.