Accessories
Mounting accessories

Torque support by rubber buffer element

Features

- **Easy and cost-effective mounting**
- **For applications with high acceleration**

Description

Push encoder onto drive shaft. Insert torque pin that is radially fixed at the encoder flange into the torque support (provided by customer).

Part number

Z 119.041	Torque support by rubber buffer for encoders with 15 mm pin

Scope of delivery

Included: torque support, rubber buffer, 2 screws M5 x 12 with two stay washers

Suitable for

G0333 , G0A2H, G0AMH, G0M2H, G0MMH, G0P5H, G1I0H, G1I0S, G1M2H, G1MMH, G2M2H, G2MMH, GBA2S, GBAMH, GBAMS, GBMMH, GBMMS, GBP5H, GE333, GEMMH, GI330 , GI331 , GI332 , GI333 , GXA2S, GXAMS, GXM2S, GXM7S, GXMMS, GXN1H, GXP1H, GXP5S, GXP6H, RXA1H

Dimension

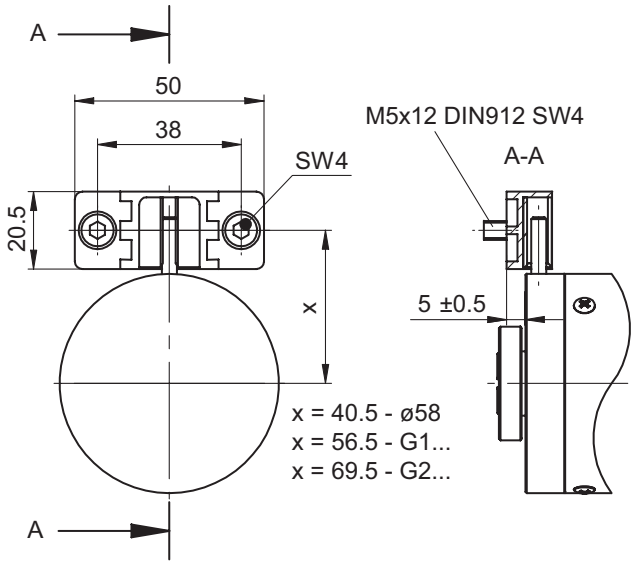

Dimensions

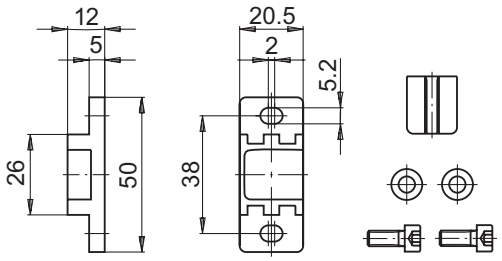

Subject to modification in technic and design. Errors and omissions excepted.