WRB 210 M-90-1.5-1.0
Glass fiber optic

- High-quality glass fibres
- Resistant to high temperature
- Robust, highly flexible

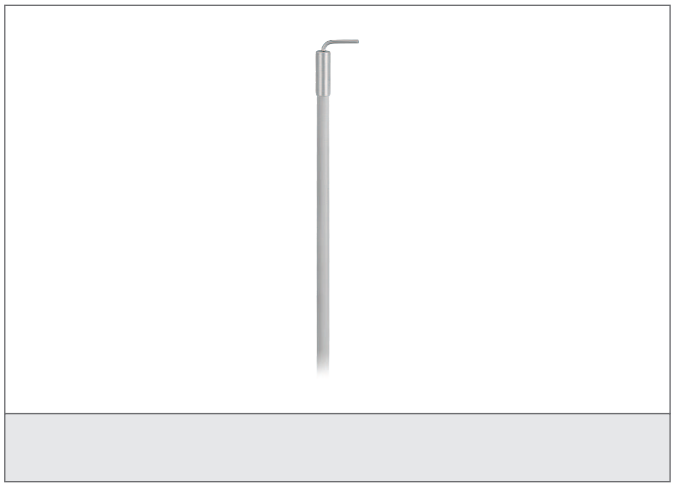

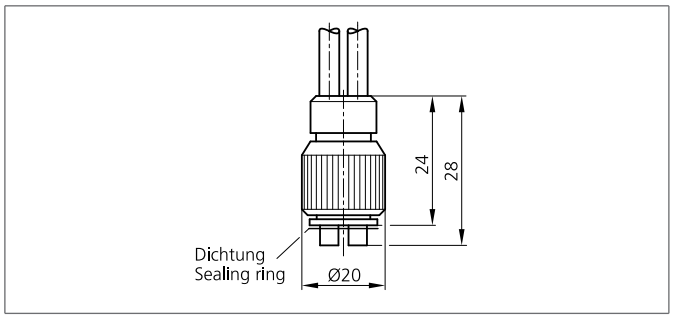

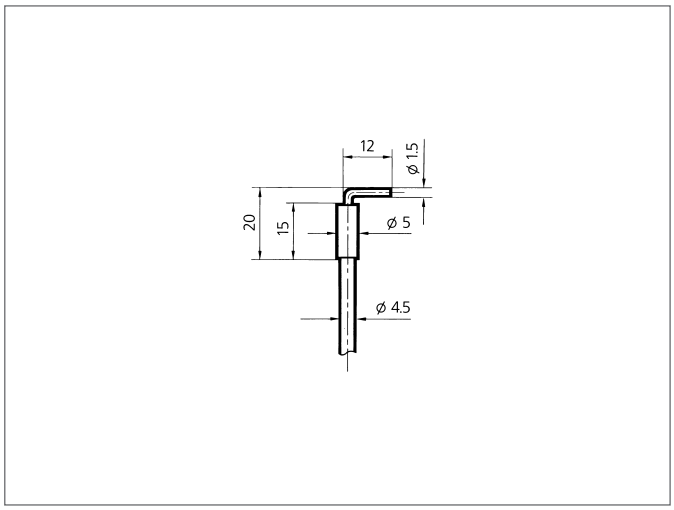

Safety instructions

The Instruments are not to be used for safety applications, in particular applications in which safety of persons depends on proper operation of the instruments.
These instruments shall exclusively be used by qualified personnel.

TECHNICAL INFORMATION (typ.)	+20°C, 24V DC
Operating principle	Through beam sensor
Design	cylinder
Length	300 mm
Active diameter	Ø 1,0 mm
Opening angle	67°
Light outlet	radial
Operating distance	120 mm
single fibre	Ø 0,05 mm
Bending radius	≥ 10 x tube-Ø
Temperature resistance	-40 ... + 180 °C (short-term up to +300 °C)
Protection class	IP 60
For	Amplifier for glass fiber optics
Material	V2A (Sensor probe) glass fibre (Fibre) Metal sleeve (Cladding)