# TKPM-W-10
## Connecting Cable

- Cable material made of PVC for applications in wet environment or under water
- Sturdy metal coupling ring
- Flexible lead design
- Good stripping properties
- High protection class
- Gold-plated plug-in contacts

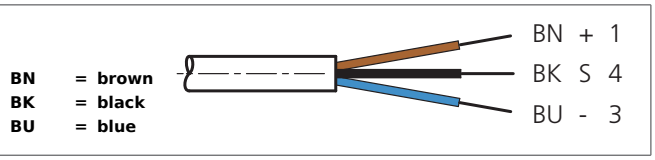


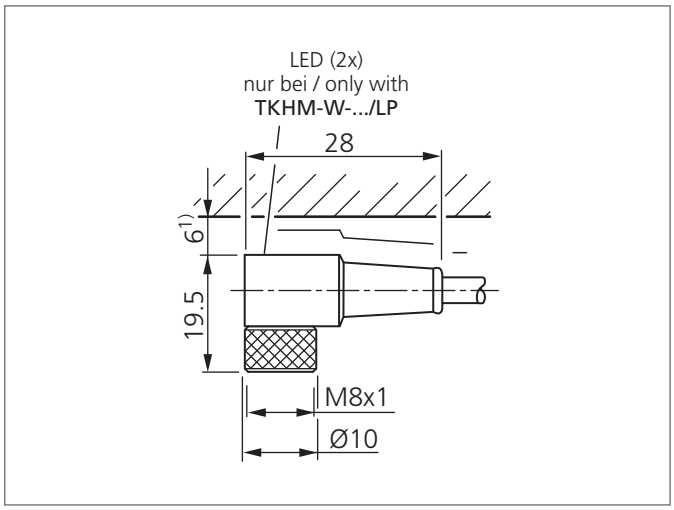


### Safety instructions

The Instruments are not to be used for safety applications, in particular applications in which safety of persons depends on proper operation of the instruments.
These instruments shall exclusively be used by qualified personnel.

| TECHNICAL INFORMATION (typ.) | +20°C, 24V DC |
|---|---|
| Size | Ø 4,5 mm (Diameter)<br>M8 x 1 (thread) |
| Design | angled |
| Length | 10.000 mm |
| Characteristics | metal coupling ring |
| Service voltage | < 60 V AC/DC |
| LED indicator | no |
| Ambient temperature | -30 ... +80°C (fixed), -5 ... +80°C (moved) |
| Protection class | IP 67, (at tightening torque 0,4 Nm) |
| Material | PVC (Cable)<br>PVC (connector) |
| Connection | Connector, M8, 3-poled |