TKPM-W-5/4
Connecting Cable

- Cable material made of PVC for applications in wet environment or under water
- Sturdy metal coupling ring
- Flexible lead design
- Good stripping properties
- High protection class
- Gold-plated plug-in contacts

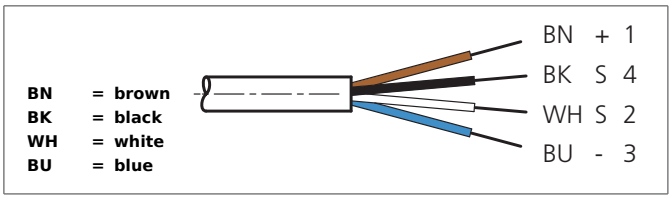

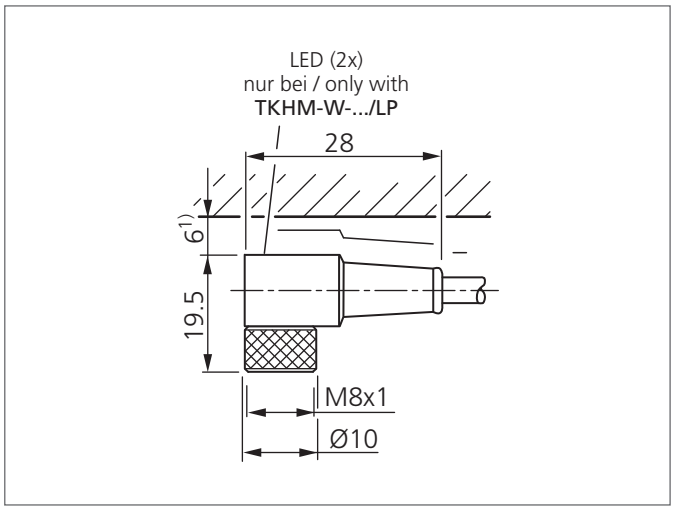

Safety instructions

The Instruments are not to be used for safety applications, in particular applications in which safety of persons depends on proper operation of the instruments.
These instruments shall exclusively be used by qualified personnel.

TECHNICAL INFORMATION (typ.)	+20°C, 24V DC
Size	Ø 4.8 mm (Diameter) M8 x 1 (thread)
Design	angled
Length	5.000 mm
Characteristics	metal coupling ring
Service voltage	< 60 V AC/DC
LED indicator	no
Ambient temperature	-30 ... +80°C (fixed), -5 ... +80°C (moved)
Protection class	IP 67, (at tightening torque 0,4 Nm)
Material	PVC (Cable) PVC (connector)
Connection	Connector, M8, 4-poled