KSSTI 1000/80-U190
Bottom Part

- For exchange on KSSTI xx00/80 ...

Safety instructions

The Instruments are not to be used for safety applications, in particular applications in which safety of persons depends on proper operation of the instruments.
These instruments shall exclusively be used by qualified personnel.

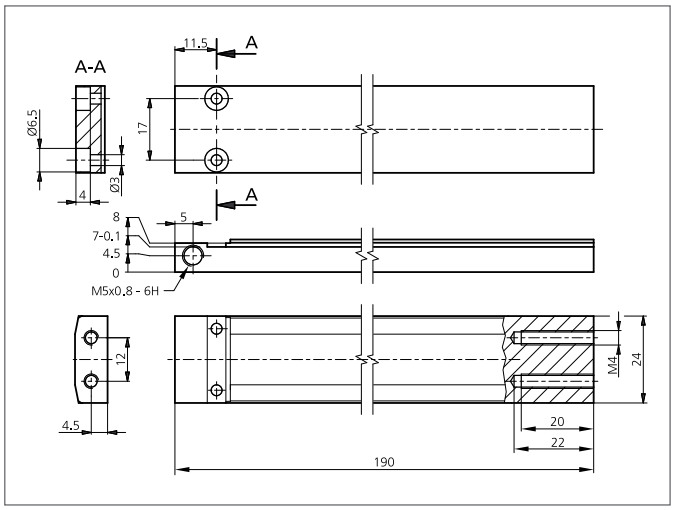

TECHNICAL INFORMATION (typ.)	
Characteristics	For label wifths up to 175 mm
Casing material	metal