M8K4/M8S3
Adapter Connector

- Coupling M8, 4-poled / Connector M8, 3-poled
- Turnable metal screw
- High protection class by IP 67

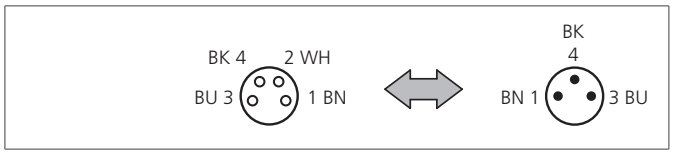

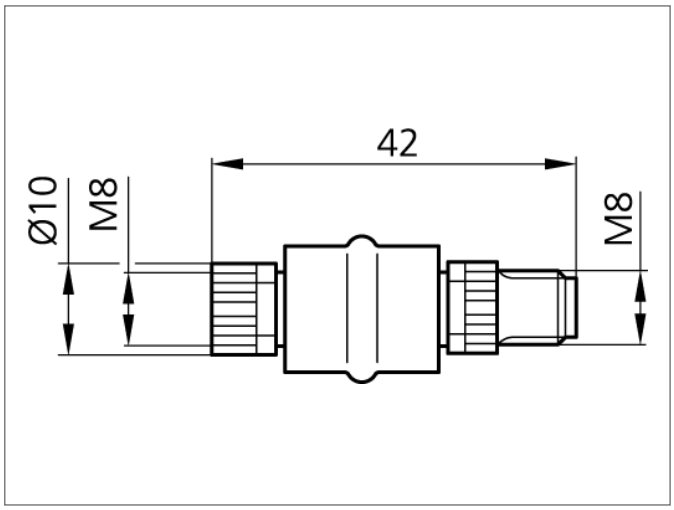

Safety instructions

The Instruments are not to be used for safety applications, in particular applications in which safety of persons depends on proper operation of the instruments.
These instruments shall exclusively be used by qualified personnel.

TECHNICAL INFORMATION (typ.)	+20°C, 24V DC
Design	straight
Service voltage	< 24 V with max. 4,0 A
Protection class	IP 67
Casing material	plastics
Connection sensor side	Socket, M8x1, 4-poled
Connection control side	Connector, M8x1, 3-poled