FS-STAB
Stabilization target

- For external drift stabilization

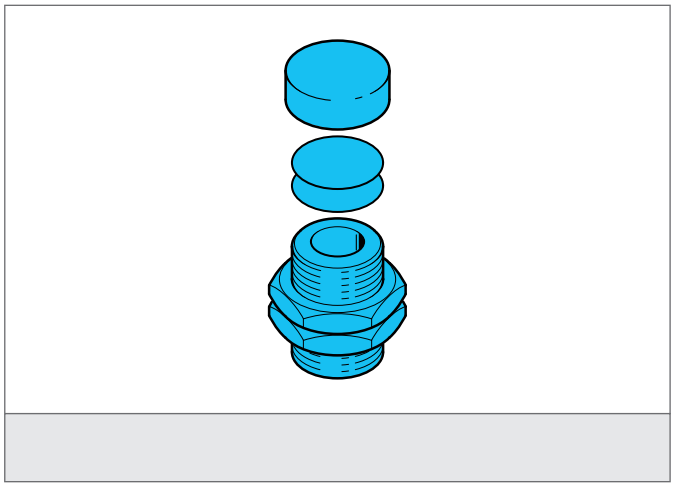

Safety instructions

The Instruments are not to be used for safety applications, in particular applications in which safety of persons depends on proper operation of the instruments.
These instruments shall exclusively be used by qualified personnel.

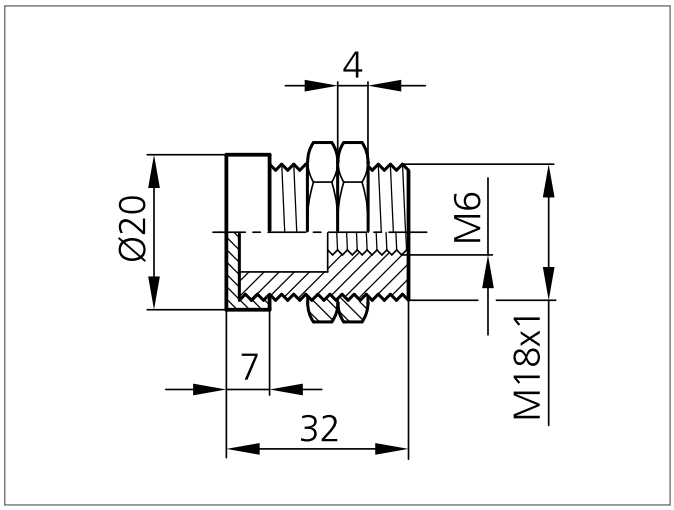

TECHNICAL INFORMATION (typ.)	
Casing material	Aluminium anodized
Target colour	RAL 9003 / RAL 7046 / black