VSID-BW-002
Mounting Bracket

- Robust design
- Adjustable

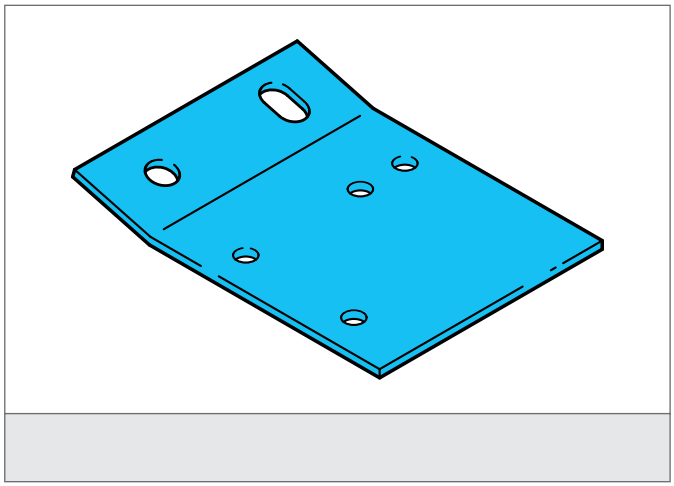

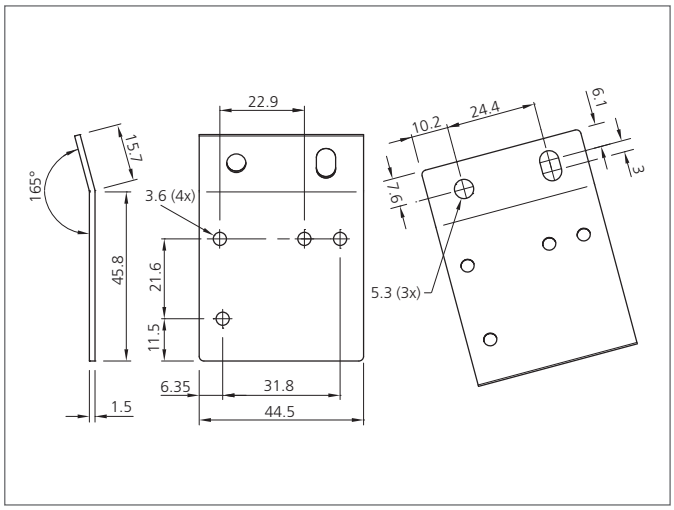

TECHNICAL INFORMATION (typ.)	
For	ID-01, ID-04, ID-05, VS-05
Casing material	metal