O-C1-S-25-14
Lens

- Compact design
- Lock screws for focus and iris adjustment
- Filters attachable
- Standardresolution

Safety instructions

The Instruments are not to be used for safety applications, in particular applications in which safety of persons depends on proper operation of the instruments.
These instruments shall exclusively be used by qualified personnel.

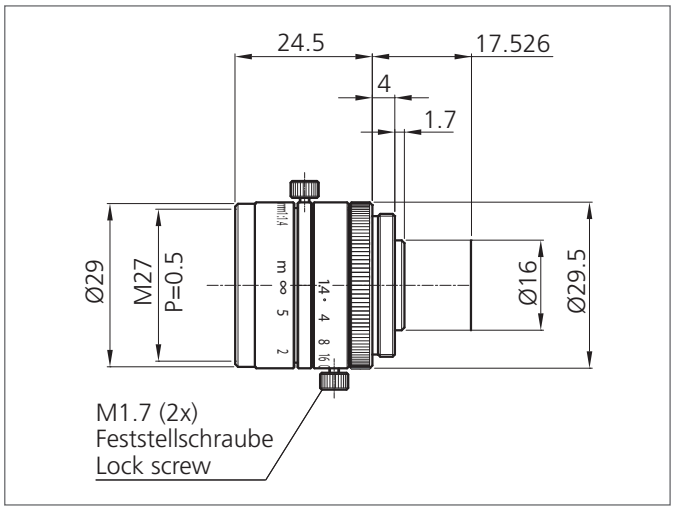

TECHNICAL INFORMATION (typ.)	+20°C
Resolution	up to 2 megapixel
For	Vision Systems and ID Systems
Focal length	25 mm
Aperture (F)	1.4
Working distance WD	500 mm
Screw thread	C-Mount
Filter thread	M27 x 0.5
Sensor size	max. 1"
Weight	36 g

© di-soric Solutions | Subject to modifications | 20/12/17 | Page 1 (1)