LHTTI 51 M 200 FG3-B4

Laser Diffuse Sensor with Background Suppression

- Automatic adjustment of transmit power
- Red light laser, with small laser spot
- Teach function
- Remote teach option with key-lock function
- Electronical background suppression
- Bright LED
- Light/dark switching

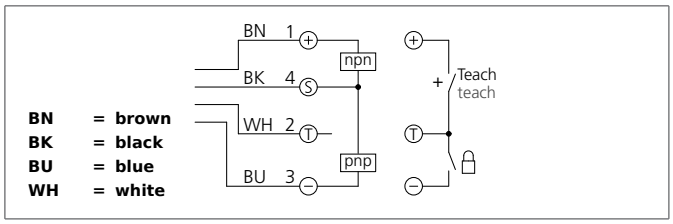

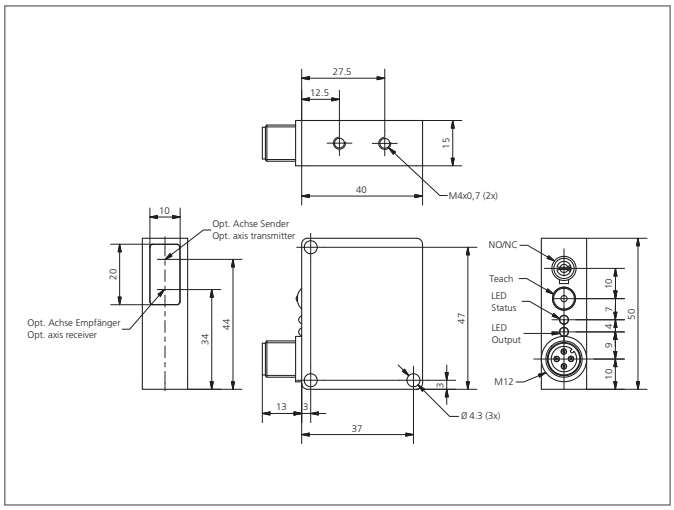

Safety instructions

Inproper use may result in hazardous radiation exposure. Pay attention to accident prevention rules and laser class. The instruments are not to be used for safety applications, in particular applications in which safety of persons depends on proper operation of the instruments. These instruments shall exclusively be used by qualified personnel.

TECHNICAL INFORMATION (typ.)	+20°C, 24V DC
Operating principle	Diffuse reflective sensor
Evaluation	digital
Size	50 x 40 x 15 mm (Dimensions)
Design	cuboid design
Emitted light	Red light laser, 650 nm, clocked
Laser class	1 (IEC 60825-1)
Service voltage	10 ... 35 V DC
Internal power consumption	25 mA, (24 V DC)
background suppression	yes
Diameter of light spot	Ø 1,5 mm
Operating distance	50 ... 200 mm
Sensitivity adjustment	Teach key + remote teach
Remote teach level	> 6 V
Switching output	Push pull, 200 mA, NO/NC, switchable
Switching hysteresis	6 % typ.
Display	LED: green - operation, yellow - output
Voltage drop	2,0 V
Switching frequency	500 Hz
Ambient temperature	-10 ... +50 °C
Ambient light immunity	5 kLx
Insulation voltage endurance	500 V
Protection class	IP 67
Protection degree	III, operation on protective low voltage

LHTTI 51 M 200 FG3-B4

Laser Diffuse Sensor with Background Suppression

TECHNICAL INFORMATION (typ.)	+20°C, 24V DC
Casing material	Die-cast zinc black lacquered finish
Material	polycarbonate (Window)
Connection	Connector, M12, 4-poled
Connecting cable	VK ...