BEK-A100-POL
Polariser

- Strongly temperature resistant. Maximally allowed puls- / pause ratic of 100 %
- Polarized filter
- To reduce glare or reflections
- Quick and easy fix and mounting
- Scratch-proof protection window
- Mounting materials included in scope of delivery

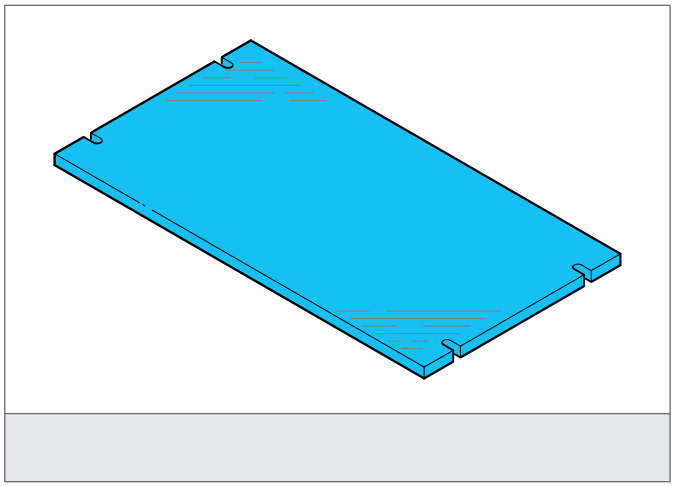

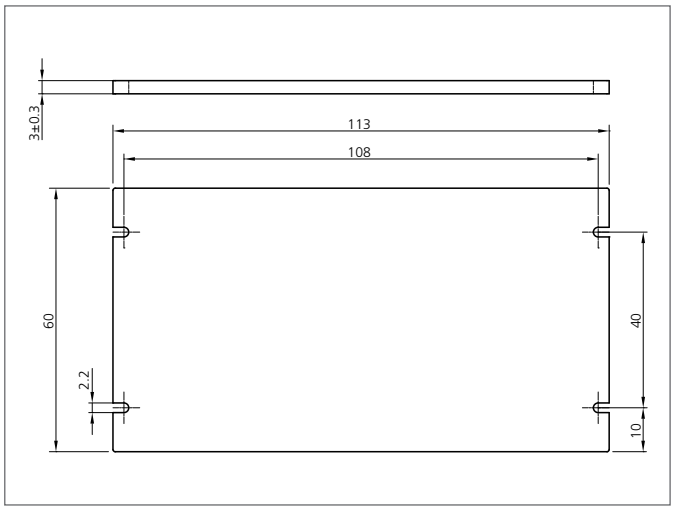

TECHNICAL INFORMATION (typ.)	+20°C, 24V DC
Characteristics	Mounting hardware included
For	Bar lights BE-A100..., Bar lights BEK-A100...
Material	PMMA, hardcoated (Window)