CD 95
Connecting cable

- Sturdy metal coupling ring
- Flexible lead design
- Good stripping properties
- High protection class

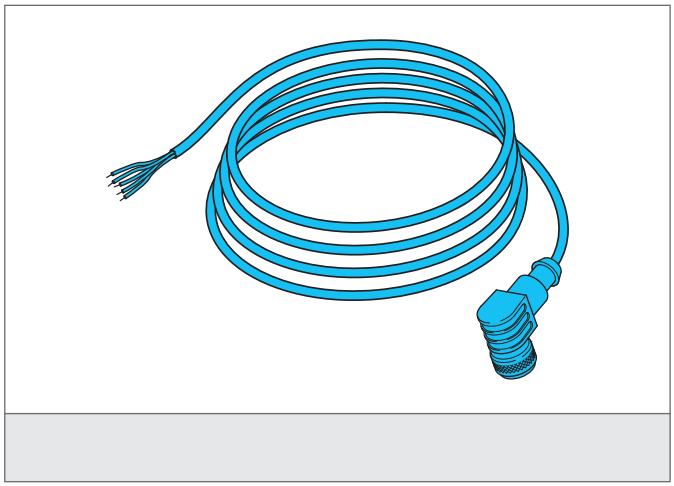

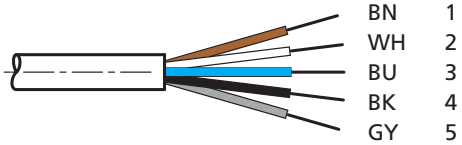

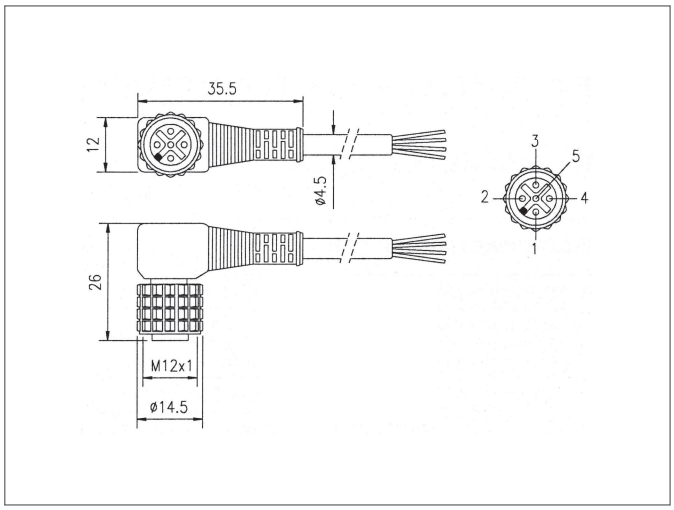

Safety instructions

All the installation, connection and safety regulations, as per our technical information, have to be strictly adhered to.
The set-up of the products have to be made by skilled staff, only.
Repair exclusively made by di-soric.

TECHNICAL INFORMATION (typ.)	+20°C, 24V DC
Operating principle	Connection cable
Size	M12 (thread)
Design	angled
Length	5.000 mm
Characteristics	metal coupling ring
Protection class	IP 67
For	SLB... and emitter SLI...
Material	PVC (Cable)
Connection	Socket M12, 5-poled, flying leads