MZ-C-T-26
T-shaped slot adapter

- Easy-to-install
- Robust design

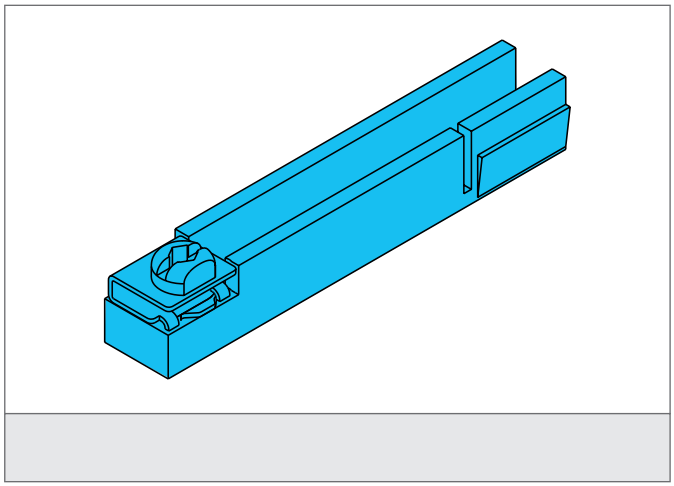

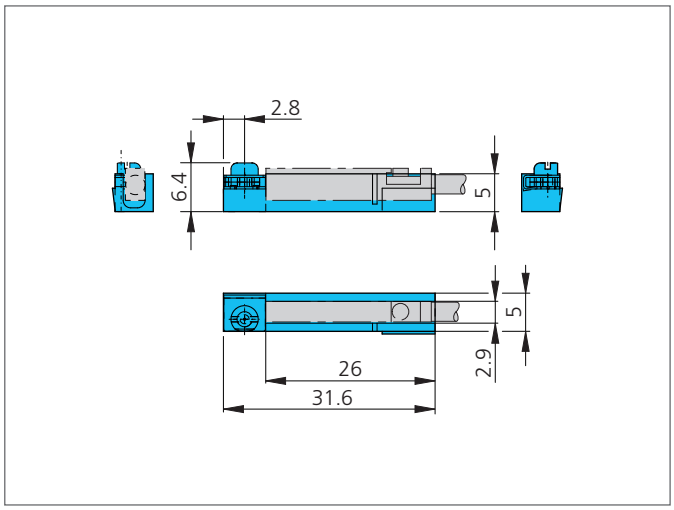

TECHNICAL INFORMATION (typ.)	+20°C, 24V DC
Mounting	at cylinder sensors with T-shaped slot
For	Zylinder sensors MZEC 9-26...
Casing material	Die-cast zinc, stainless steel