# BEK-A500-DIF
## Diffusor

- Diffusion filter
- Homogenous light reduction
- Quick and easy fix and mounting
- Scratch-proof protection window
- Mounting materials included in scope of delivery

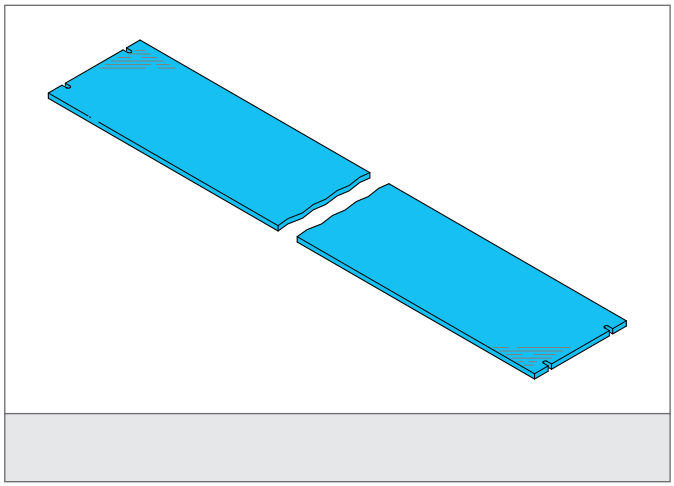

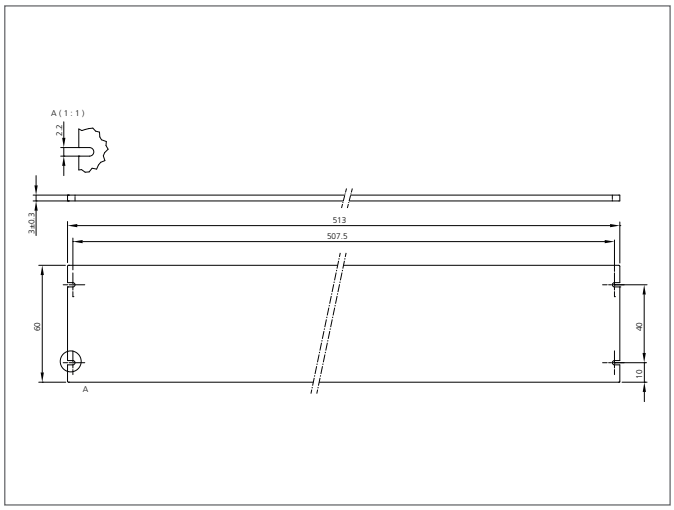


| TECHNICAL INFORMATION (typ.) | +20°C, 24V DC |
|---|---|
| Characteristics | Mounting hardware included |
| For | Bar lights BE-A500..., Bar lights BEK-A500... |
| Material | PMMA, hardcoated (Window) |