MB-DIF-700
Diffusor

- Diffusion filter
- For a homogenous light reduction and illumination
- Quick and easy fix and mounting

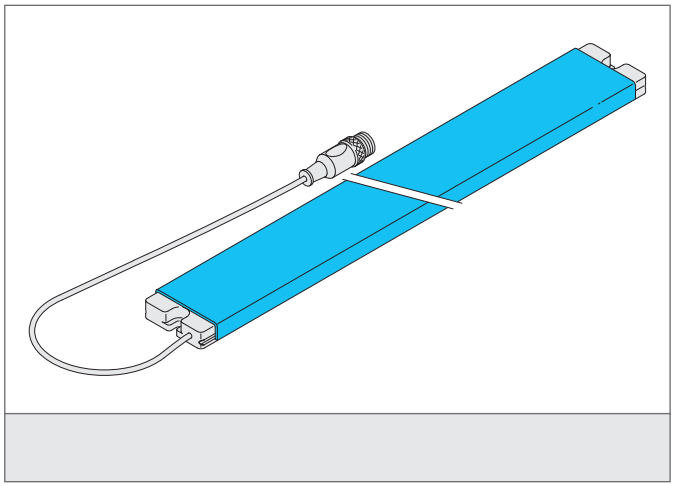

Safety instructions

The Instruments are not to be used for safety applications, in particular applications in which safety of persons depends on proper operation of the instruments.
These instruments shall exclusively be used by qualified personnel.

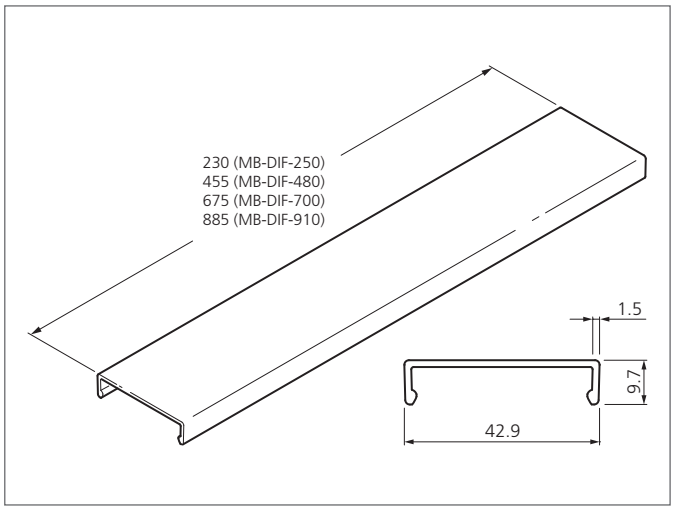

TECHNICAL INFORMATION (typ.)	+20°C, 24V DC
Mounting	by clamping groove
Illuminated area	675 x 40 mm
For	MB-N-700 ...
Material	PC diffuse (Window)
Weight	72 g