CS-WINDOWKIT-IR
IR filter

- Quick and easy fix and mounting
- For the assembly at CS 50
- For contrast enhancement
- Infrared filter

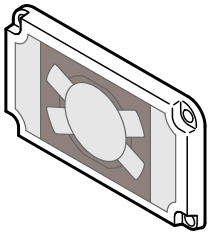

Safety instructions

The Instruments are not to be used for safety applications, in particular applications in which safety of persons depends on proper operation of the instruments.
These instruments shall exclusively be used by qualified personnel.

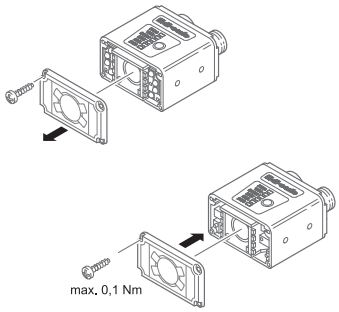

TECHNICAL INFORMATION (typ.)	+20°C, 24V DC
Mounting	4 holes
For	CS 50
Casing material	plastics
Tightening torque	max. 0,1 Nm