# O-C4-S-06-18
## Lens

- Highest resolution
- Compact design
- Lock screws for focus and iris adjustment

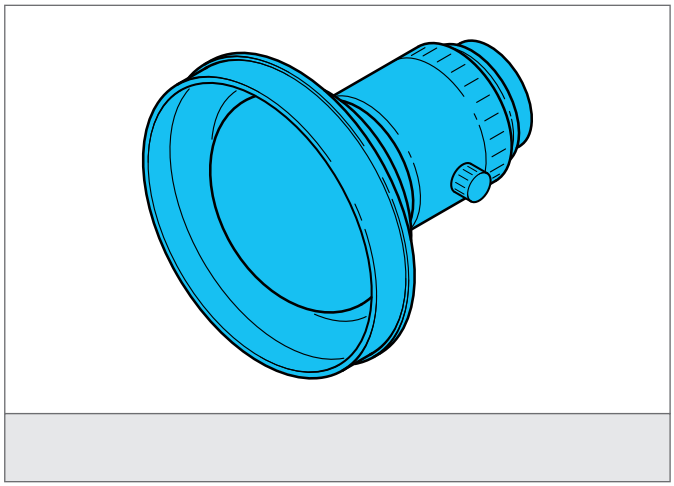

### Safety instructions

The Instruments are not to be used for safety applications, in particular applications in which safety of persons depends on proper operation of the instruments.
These instruments shall exclusively be used by qualified personnel.

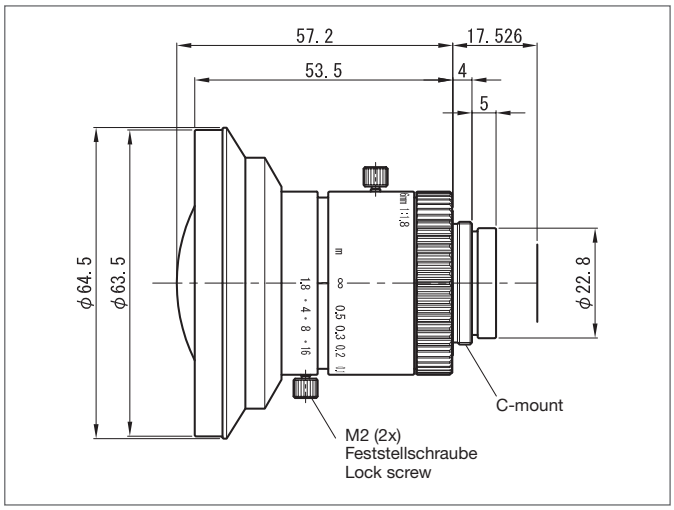


| TECHNICAL INFORMATION (typ.) | +20°C |
|---|---|
| Resolution | 5 to 9 megapixel |
| For | Vision Systems and ID Systems |
| Focal length | 6 mm |
| Aperture (F) | 1.8 |
| Screw thread | C-Mount |
| Sensor size | max. 1" |
| Weight | 250 g |