O-C4-S-16-14
Lens

- Highest resolution
- Compact design
- Lock screws for focus and iris adjustment

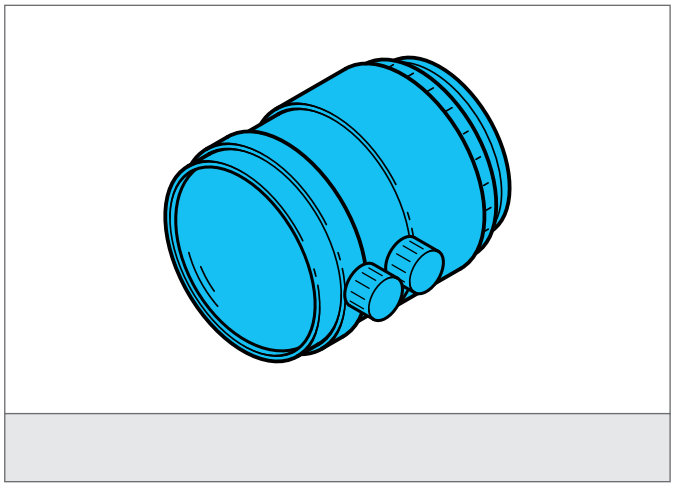

Safety instructions

The Instruments are not to be used for safety applications, in particular applications in which safety of persons depends on proper operation of the instruments.
These instruments shall exclusively be used by qualified personnel.

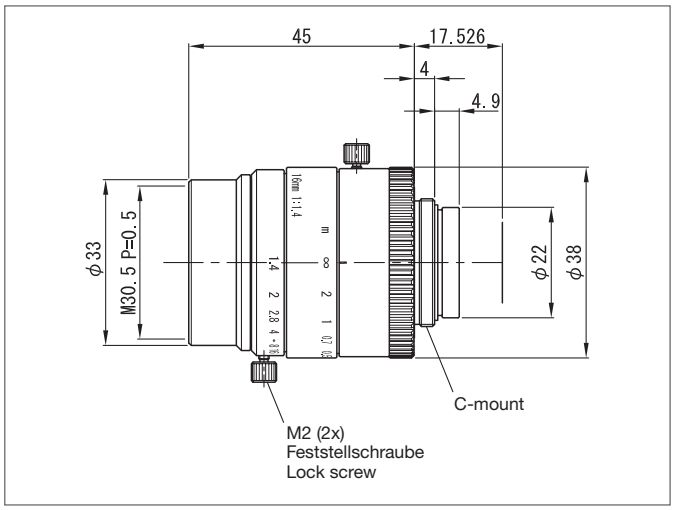

TECHNICAL INFORMATION (typ.)	+20°C
Resolution	5 to 9 megapixel
For	Vision Systems and ID Systems
Focal length	16 mm
Aperture (F)	1.4
Screw thread	C-Mount
Filter thread	M30.5 x 0.5
Sensor size	max. 1"
Weight	140 g