Level Pressure Flow Temperature Liquid Analysis Registration Systems Components Services Solutions

Technical Information

Flexdip CYA112

Immersion assembly for water and wastewater

Application

- Water treatment
- Wastewater treatment
- Plant design

CYA112 is a modular assembly system for sensors in open basins, channels and tanks.
Suitable for sensors with various connection threads.
A float assembly is available for varying water levels.

Your benefits

- The modular system allows an optimum configuration for every measuring place
- Assembly length from 600 mm (23.6") to 3600 mm (142") in steps of 600 mm (23.6")
- Versions in stainless steel or PVC
- Quick fastener for:
  - fast installation and exchange of Memosens sensors with contactless plug-in head
  - twist-free installation of fixed-cable sensors
  - alignment of sensors
- Easy to install and to maintain

TI00432C/07/EN/13.12
71147941

Endress+Hauser
People for Process Automation

Function and system design

Measuring system

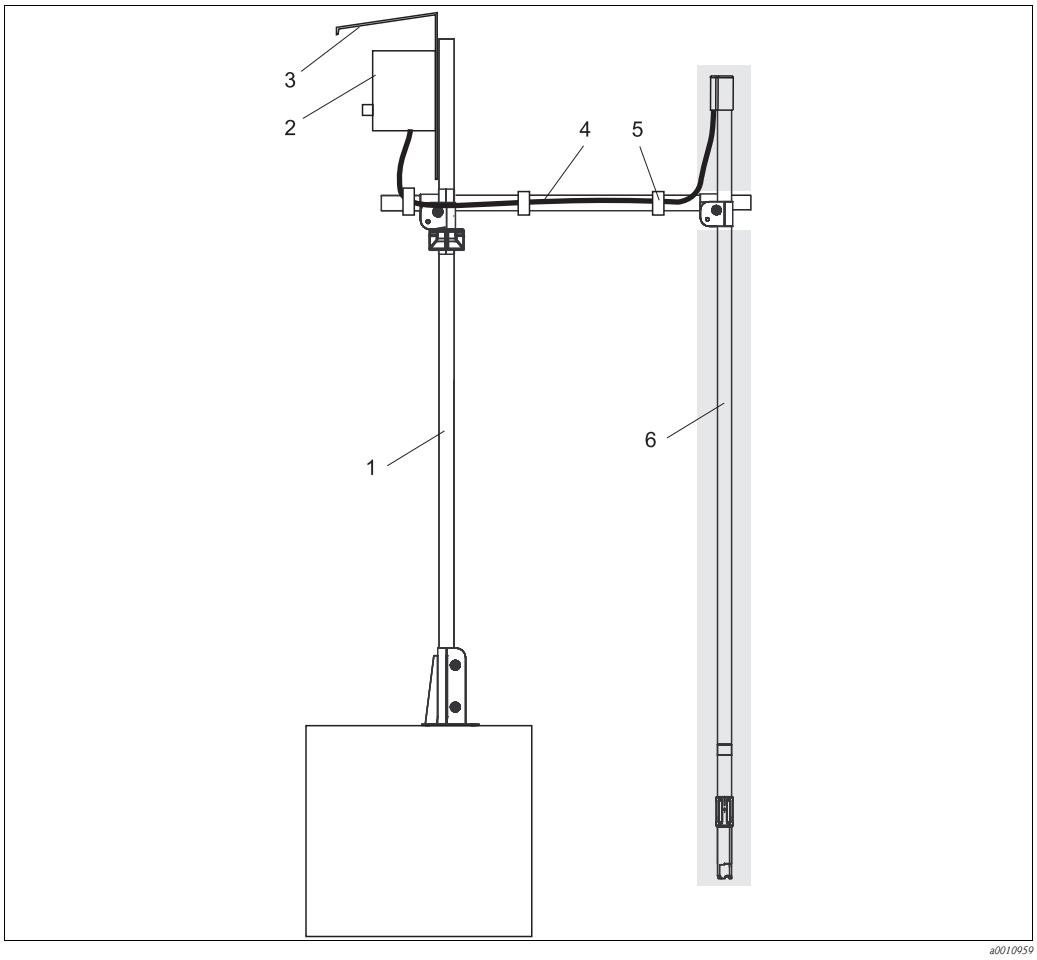

Measuring system (example)

1	*Holder system CYH112 main pipe*	*4*	*Holder system CYH112 transverse pipe*
2	*Transmitter*	*5*	*Hook-and-loop cable ties*
3	*Weather protection cover*	*6*	*Assemly CYA112 (highlighted by a grey background)*

Configuration

The assembly consists of:
- Immersion pipe
- Connection angle for the sensor
- Sensor adaption
- Quick fastener
- Accessories

The assembly is available as stainless steel version and PVC version. The assembly can be installed in various ways.
- "Standard": Immersion pipe with an outer diameter of 40 mm (1.57"). It is used for fixed installation or for the pendulum holder system (the pendulum holder system is part of holder system Flexdip CYH112).
- "Chain": The immersion pipe is equipped with a multifunctional clamp ring and a suspension bracket. It is hooked into a chain (the chain is part of holder system Flexdip CYH112).
- "Floater" : PVC immersion pipe equipped with a floating body. Combined with a pendulum holder, the floater is used for varying water levels (the pendulum holder is part of holder system Flexdip CYH112).

Note!
The holder system Flexdip CYH112 (fixed installation, chain, pendulum holder) is especially designed for the assembly Flexdip CYA112.

Stainless steel version

The immersion pipes are available in various lengths starting at 600 mm (23.6"). They are delivered in pieces of 600 mm (23.6") and 1200 mm (47.3"). To screw the pipes together, each pipe has an inner thread M36 on one end and an outer thread M36 on the other end. The maximum achievable length is 3600 mm (141"). The screw joints are sealed with O-rings.
The immersion pipes are mainly used for fixed installations. With lengths up to 1200 mm (47.3"), the assembly can also be used with a chain holder system.

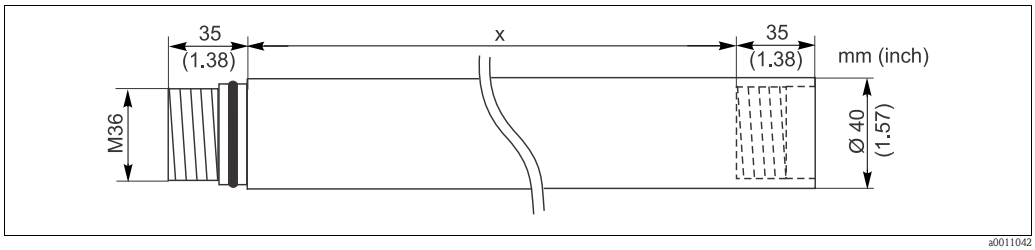

Immersion pipe as stainless steel version

x Length = 600, 1200, 1800, 2400 or 3600 mm (23.6", 47.3", 70.9", 94.5" or 142")

Connection pipes or connection knees have a G 1 thread for the sensor. For large sensors, a connection knee G 1½, 45° is available. For other sensors, various adapters are available (NPT ¾", G ¾, Pg 13.5).

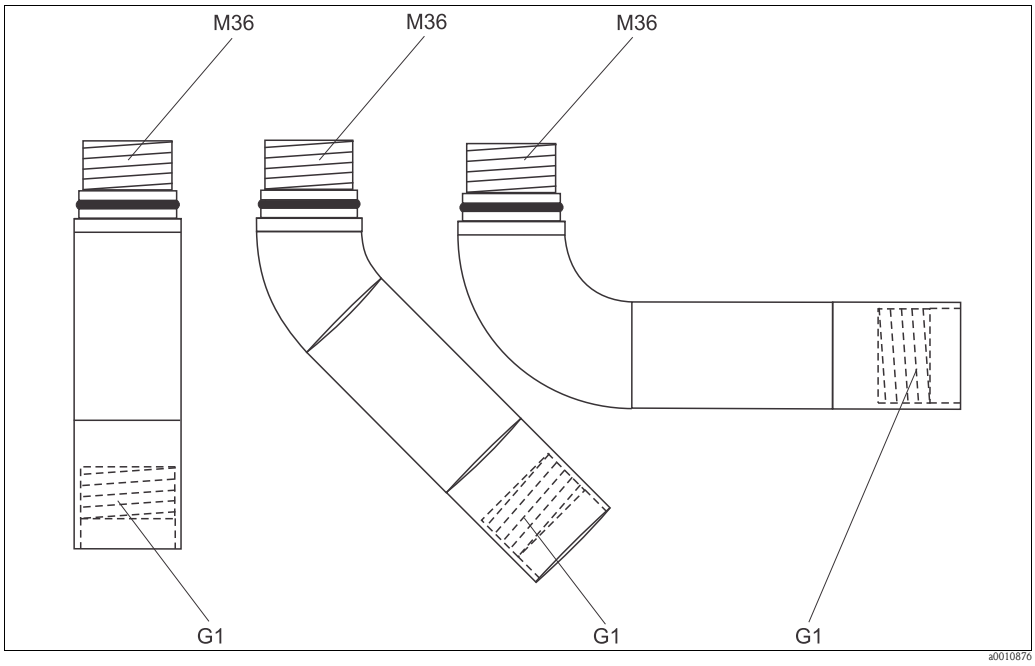

Connection pipes 0°, 45° or 90°

At the end of the immersion pipe a connection pipe or connection knee (0°, 45° or 90°) will be screwed on. The pipes are sealed with an O-ring against the medium.

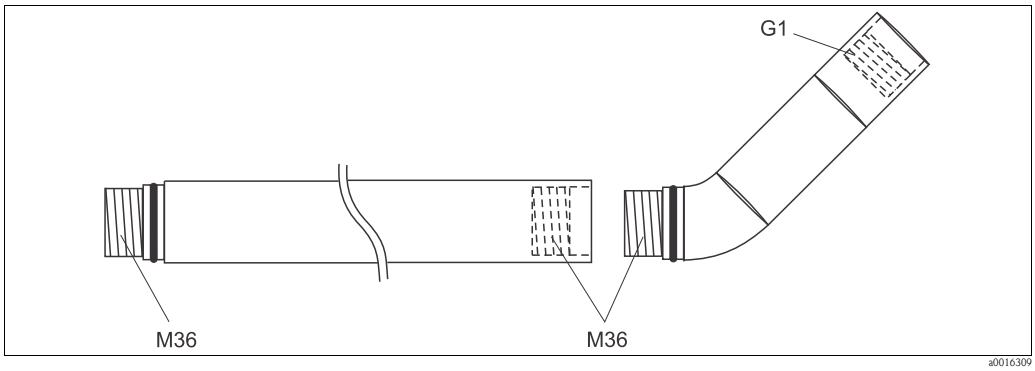

Example

PVC version

The immersion pipes are available in various lengths starting at 600 mm (23.6"). They are delivered in pieces of 600 mm (23.6") and 1200 mm (47.3"). Immersion pipes up to 1200 mm (47.3"), straight or with an angle of 45°, are delivered ready-to-install. Lengths longer than 1200 mm (47.3") have to be bonded on-site. The necessary materials (glue, cleaning tissues, adhesive coupling) are included in the scope of delivery. The maximum achievable length is 2400 mm (94.5").
To stabilize the PVC assembly (prevent buoyancy) the assembly is equipped with weigths of stainless steel (immersion pipe of 600 mm: 1 weight; 1200 mm: 2 weights).

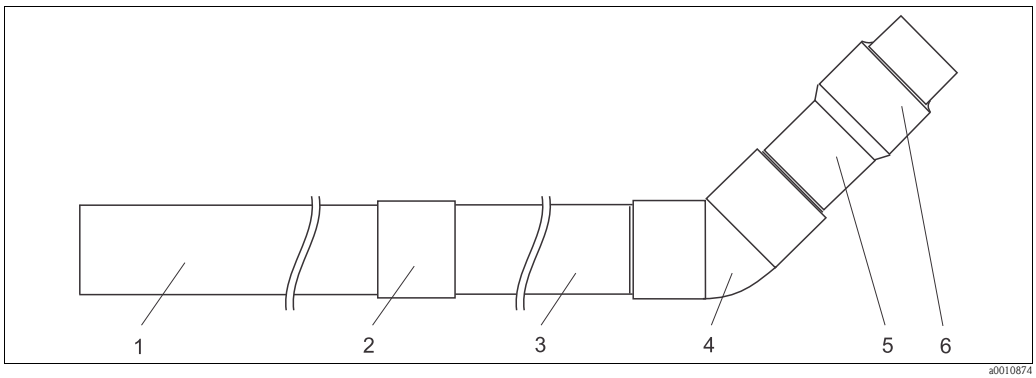

PVC pipe connection 1800 mm (70.9"), 45°

1 *Immersion pipe 1200 mm (47.3")*
2 *Adhesive coupling*
3 *Immersion pipe 600 mm (23.6")*
4 *Adhesive coupling 45°*
5 *PVC connection pipe for angulated version*
6 *Sensor adapter G 1*

In the "Standard" version the adapter on the sensor side is equipped with a G 1 thread. Sensors with other threads need an adapter (NPT ¾", G ¾, Pg 13.5).

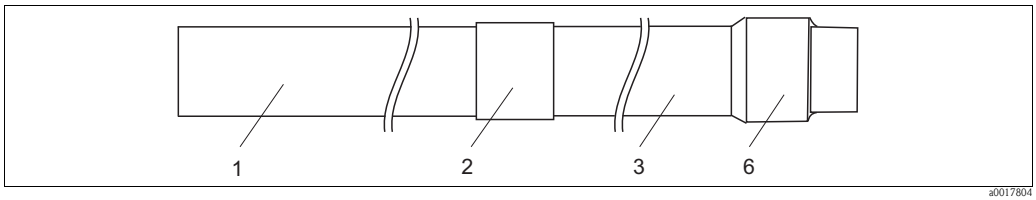

PVC pipe connection 1800 mm (70.9"), straight

1 *Immersion pipe 1200 mm (47.3")*
2 *Adhesive coupling*
3 *Immersion pipe 600 mm (23.6")*
6 *Sensor adapter G 1*

Floater version

Floater version

The assembly with floater is **only** available as PVC version. The immersion depth of the sensors (depending on the sensor) is approx. 600 mm (23.6"). Preferably the assembly works together with the pendulum holder Flexdip CYH112. The installation has to be done on-site. The floater version contains no additional weights. This version is designed to compensate varying water levels.

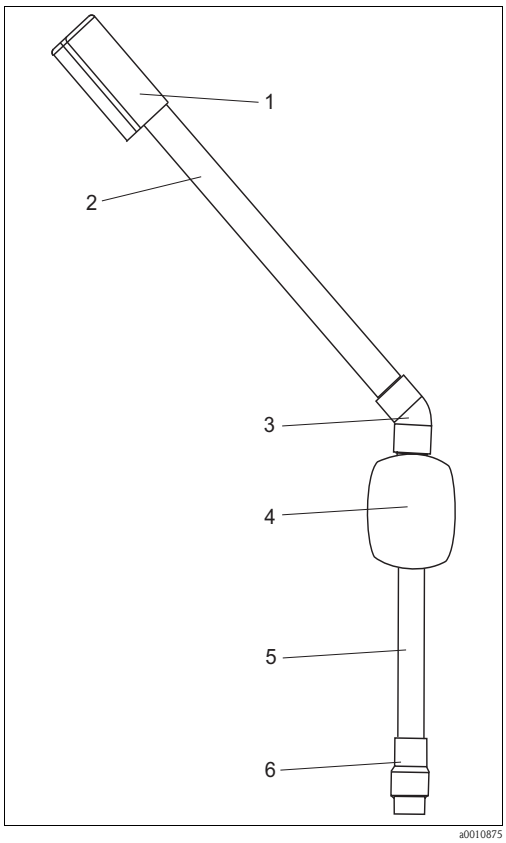

Floater version

1 *Splash protection cap*
2 *Immersion pipe 600 to 2400 mm (23.6" to 94.5")*
3 *Adhesive coupling 45°*
4 *Floater*
5 *Immersion pipe 600 mm (23.6")*
6 *Sensor adapter G1*

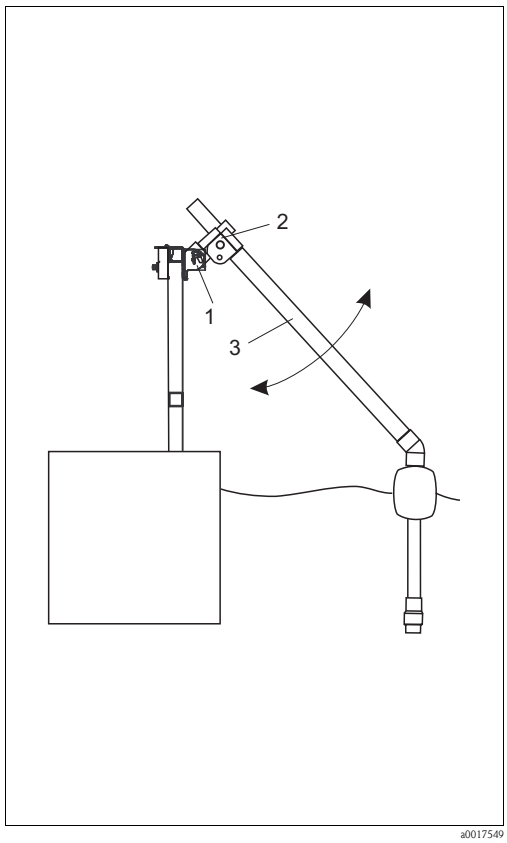

Floater version with pendulum holder

1 *Pendulum holder*
2 *Cross clamp*
3 *Assembly with floater*

Pipe length (pos. 2)	Maximum stroke (level difference)
600 mm (23.6")	approx. 400 mm (16")
1200 mm (47.3")	approx. 1000 mm (39")
1800 mm (70.9")	approx. 1600 mm (63")
2400 mm (94.5")	approx. 2200 mm (86")

The floater is available in two versions:
Version A up to middle of 2012 and version B from middle of 2012 on

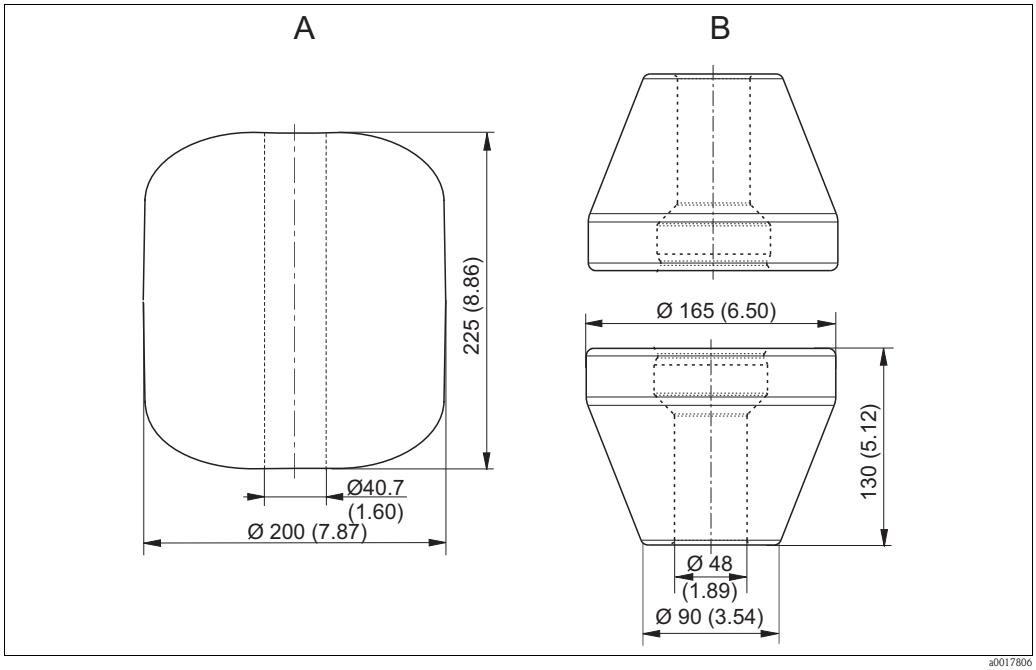

Floater

A Up to middle of 2012 (one-piece)
B From middle of 2012 (two-piece)

Quick fastener (optional)

The quick fastener is designed for
- quick and easy installation and exchange of Memosens sensors with inductive plug-in connection. When using sensors with fixed cable connection, untwisting the cables is not longer necessary.
- aligning the installed sensor
- quick fastening of G 1 to G 1 thread (other threads via adapter)

The quick fastener is installed between sensor and assembly.

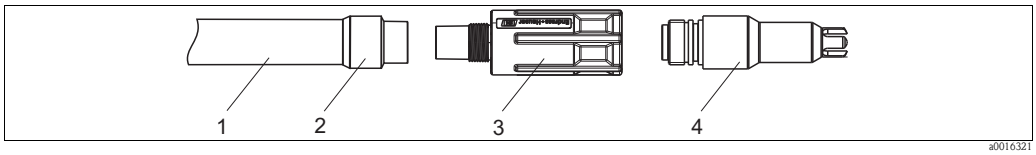

Quick fastener

1 Immersion pipe
2 Sensor adapter G1
3 Quick fastener
4 Sensor holder Pg 13.5 (example for sensor)

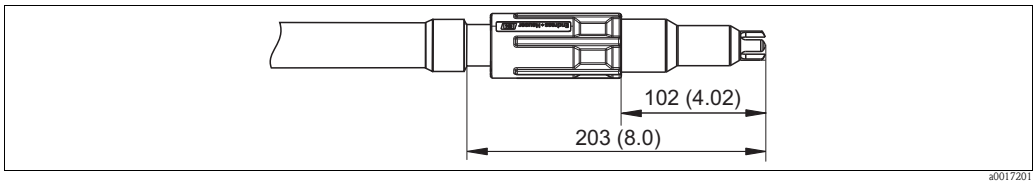

Dimensions of quick fastener, mounted, with sensor holder Pg 13.5

Examples

The parts shown in the six following examples are included in the respective scope of delivery.

Immersion pipe standard

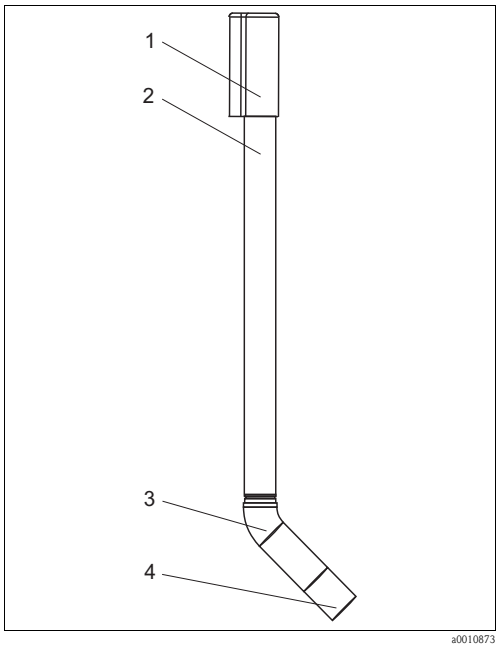

CYA112 with sensor adapter G1 (stainless steel)

1 Splash protection cap
2 Stainless steel immersion pipe, 600 mm (23.6")
3 Stainless steel connection knee ,45°
4 Sensor adapter G1

Order code: AA21A2BA

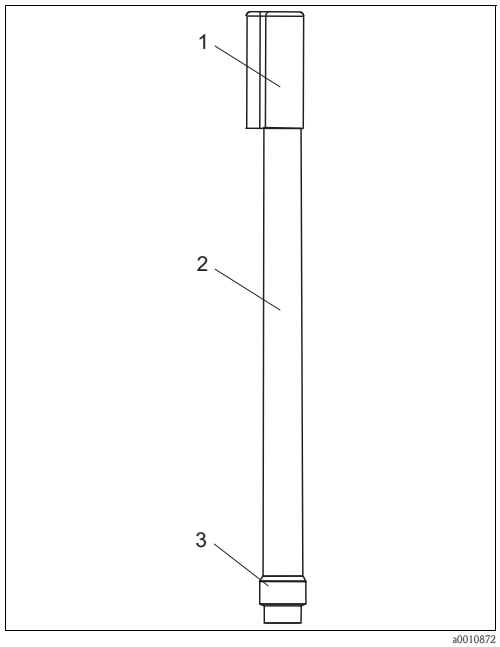

CYA112 with sensor adapter G1 (PVC)

1 Splash protection cap
2 PVC immersion pipe 600, mm (23.6")
3 Sensor adapter G1

Order code: AA11A1AA

Immersion pipe floater

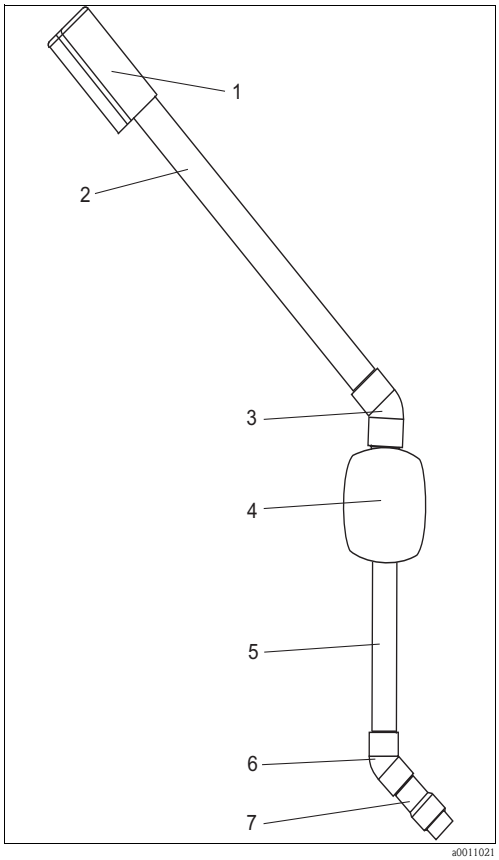

CYA112 with floater (PVC version only)

1 *Splash protection cap*
2 *PVC immersion pipe, 1200 mm (47.2")*
3 *Adhesive coupling 45°*
4 *Floater*
5 *PVC immersion pipe, 600 mm (23.6")*
6 *Adhesive coupling 45°*
7 *Sensor adapter G1*

Order code: AC11B1BA

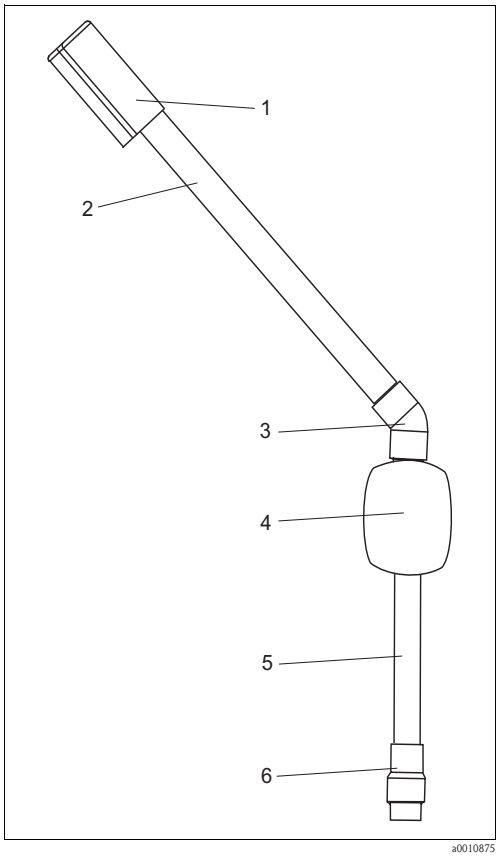

CYA112 with floater (PVC version only)

1 *Splash protection cap*
2 *PVC immersion pipe, 1200 mm (47.2")*
3 *Adhesive coupling45°*
4 *Floater*
5 *PVC immersion pipe, 600 mm (23.6")*
6 *Sensor adapter G1*

Order code: AC11B1AA

Immersion pipe chain

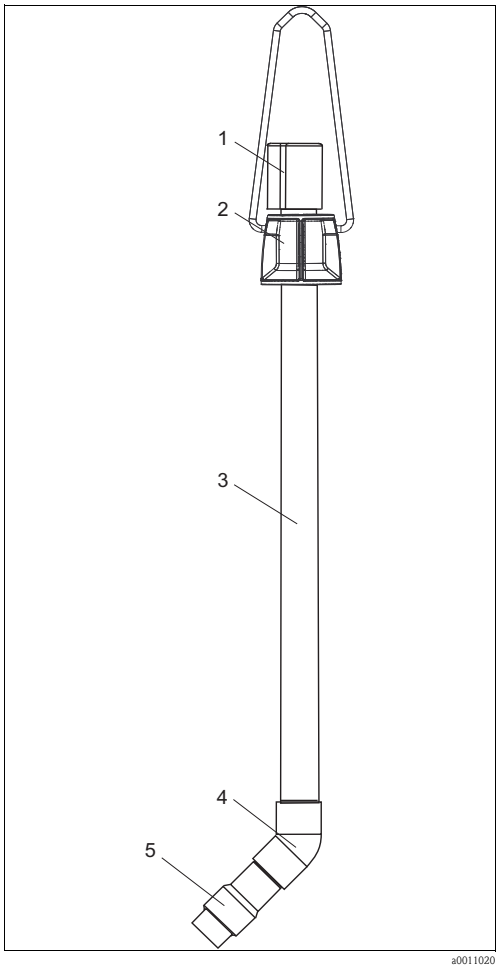

CYA112 with chain holder system

1 *Splash protection cap*
2 *Multifunctional clamp ring with suspension bracket*
3 *PVC immersion pipe ,1200 mm (47.2")*
4 *Adhesive coupling 45°*
5 *Sensor adapter G1*

Order code: AB11B1BA

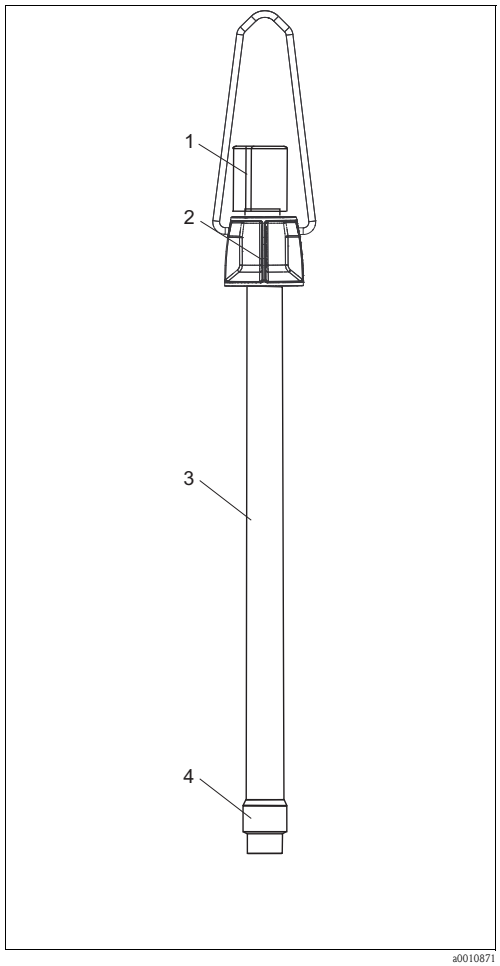

CYA112 with chain holder system

1 *Splash protection cap*
2 *Multifunctional clamp ring with suspension bracket*
3 *Immersion pipe PVC 1200 mm (47.2")*
4 *Sensor adapter G1*

Order code: AB11B1AA

Installation

Installation instructions

Install the assembly on a place with enough free space around it so the sensor cannot get damaged.
When installing the assembly in a fixed position, make sure that it can be easily accessed and maintained. The immersion pipe has to protrude the holding point by at least 100 mm (3.94")

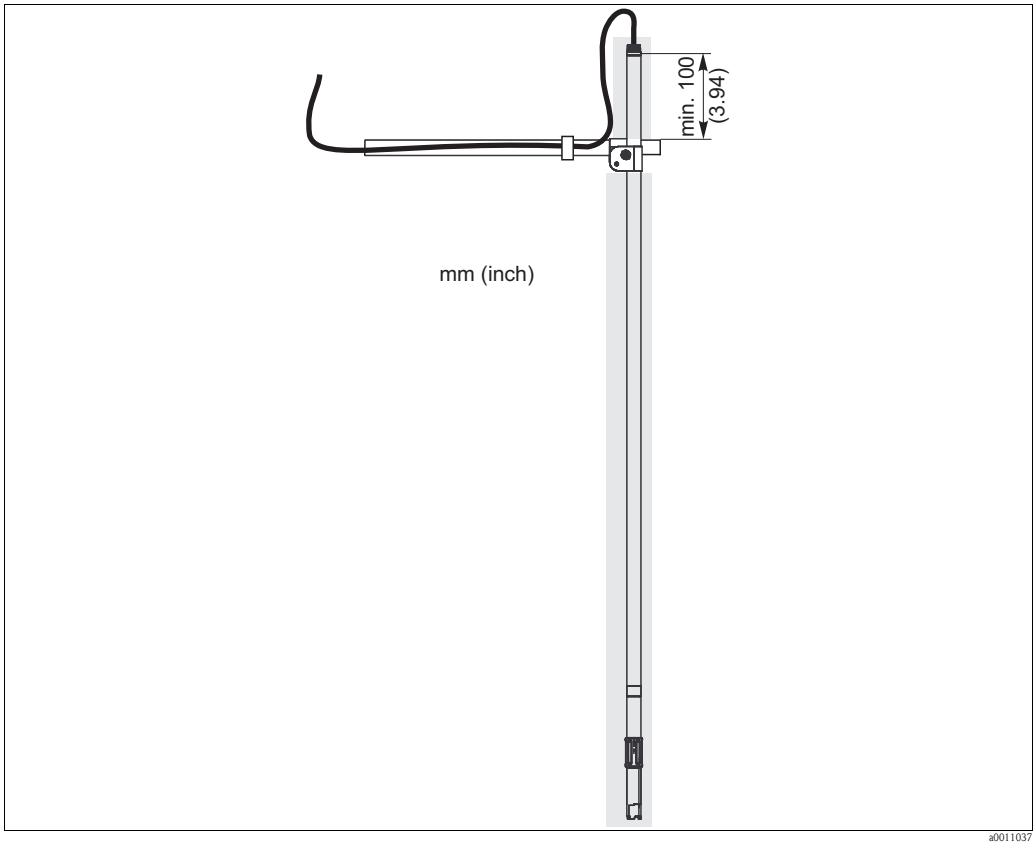

Holding point (illustration without splash protection cap)

Grounding

The grounding has to be done on-site. All conductive parts have to be connected to each other.

For use in hazardous areas:
- The immersion pipe side of the assembly has to be conductively connected to the corresponding holder or fixing.
- When the assembly is fixed via chain or mounting bracket a separate conductor for potential match is needed beside the measuring cable.
- If sensors have accessible metallic surfaces, these surfaces have to be connected to the potential match according to the corresponding operating instructions.

Cable routing

The sensor cable is routed inside the assembly. At the pipe exit the sensor cable is centered by a rubber plug. The mechanical protection is ensured by the splash protection cap.

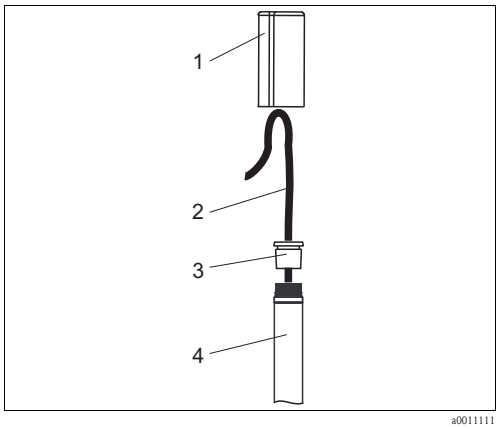

Cable routing

1 Splash protection cap
2 Sensor cable
3 Rubber plug
4 Assembly

Environment

Ambient temperature

-20 to +60 °C (-4 to 140 °F)

Process

Process temperature range

0 to 60 °C (32 to 140 °F)

Process pressure range

unpressurized

Buoyant force of floater

Version up to middle of 2012: approx. 5 kg
Version from middle of 2012 on: approx. 3 kg

Mechanical construction

Dimensions	Immersion pipe (PVC):	Ø 40 mm (1.57"), length: 600, 1200, 1800 and 2400 mm (23.6", 47.2", 70.9" and 94.5")
	Immersion pipe (stainless steel):	Ø 40 mm (1.57"), length: 600, 1200, 1800, 2400 and 3600 mm (23.6", 47.2", 70.9", 94.5" and 142")
Weight	Immersion pipe (stainless steel) (length 1 / 2 / 3 / 4 / 5):	0.6 / 1.2 / 1.8 / 2.4 / 3.5 kg (1.3 / 2.6 / 4.0 / 5.3 / 10.8 lbs)
	Immersion pipe (PVC) (length 1 / 2 / 3 / 4):	0.3 / 0.6 / 0.95 / 1.3 kg (0.7 / 1.4 / 2.1 / 2.8 lbs)
	Multifunctional clamp ring:	0.15 kg (0.33 lbs)
	Weights for immersion pipe (PVC):	0.32 kg (0.71 lbs)
Materials	Immersion pipe:	stainless steel 1.4404 (AISI 316 L)
	Connection angle:	stainless steel 1.4404 (AISI 316 L)
	Welded threads	stainless steel 1.4571 (AISI 316 Ti)
	Sensor adaption:	POM - GF
	Quick fastener:	POM - GF
	Multifunctional clamp ring:	POM - GF
	Cap:	PE
	Chain bracket:	stainless steel 1.4571 (AISI 316 Ti) or 1.4404 (AISI 316 L)
	O-rings:	EPDM
	Floater, yellow:	PVC (up to middle of 2012)
	Floater, black:	EPP (from middle of 2012 on)

Sensors

Sensor	Preferred assembly material *	Connection angle	Connection thread	Suitable for quick fastener
CPSx1/1D	PVC	0°	Pg 13.5	yes
CPF8x/8xD	PVC	0°	NPT ¾"	yes
COS31/41	PVC	0°	G1	yes, without SXP plug
COS51D	PVC	0°	G1	yes
COS61	PVC, stainless steel	45°	G1	yes, without SXP plug
CUS41	PVC, stainless steel	0°	G1	yes
CNS70	stainless steel	45°	G1½	no
CUS65	stainless steel, PVC	0° / 45°	G1	no
CUS70	PVC	0°	G1	no
CCS142D	PVC	45°	NPT ¾"	yes
CLS50/50D	PVC, stainless steel	0°	G¾	yes
CAS51D	PVC, stainless steel	0° / 90°	G1	yes
COS61D	PVC, stainless steel	45°	G1	yes
CUS51D	PVC, stainless steel	45°	G1	yes
CUS71D	PVC, stainless steel	0°	G1	yes

Sensors sorted by connection thread

Sensor with connection thread	Preferred assembly material *	Connection angle	Adapter	Suitable for quick fastener
Pg 13.5	PVC	0°	Pg 13.5	yes
NPT ¾"	PVC	0° / 45°	NPT ¾"	yes
G¾	PVC, stainless steel	0°	G¾	yes
G1	PVC, stainless steel	0° / 45° / 90°	G1	yes
G1½	stainless steel	45°	G1½	no

* Use stainless steel for hazardous areas

Sensor adapter

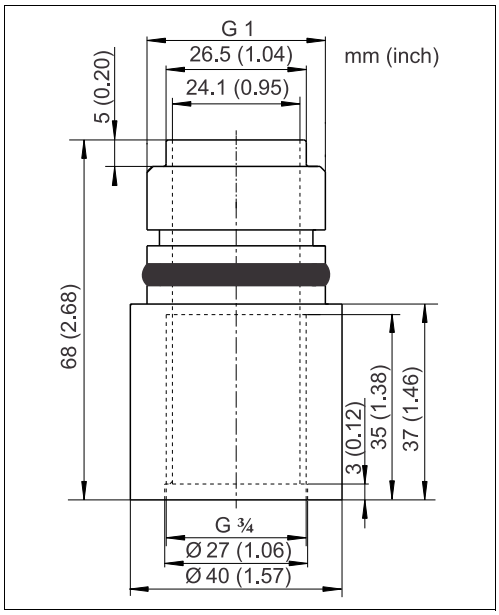

Adapter G 1 to G ¾

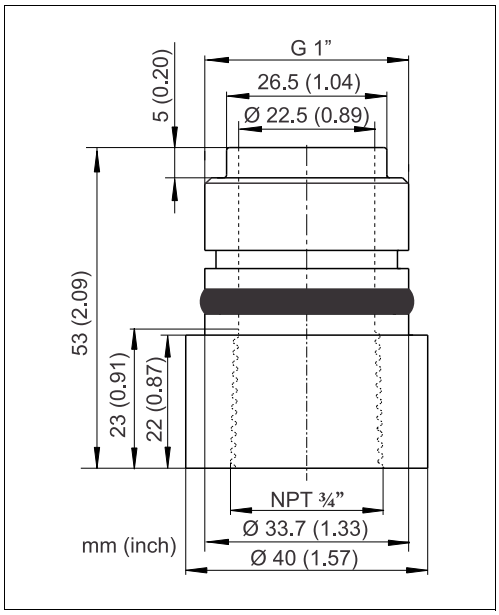

Adapter G 1 to NPT ¾

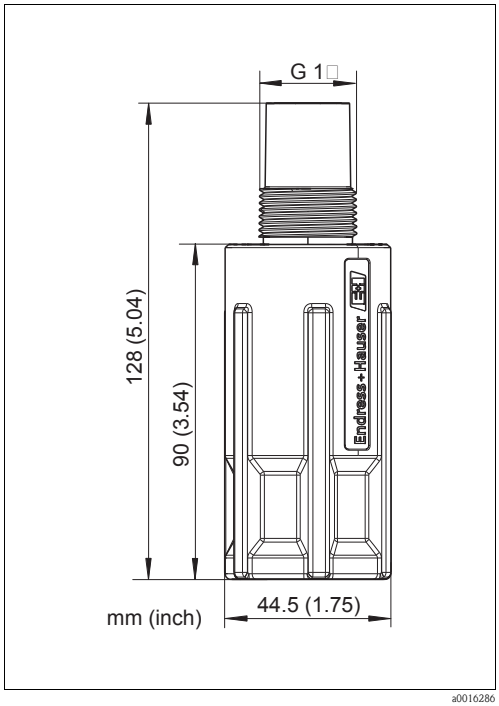

Quick fastener

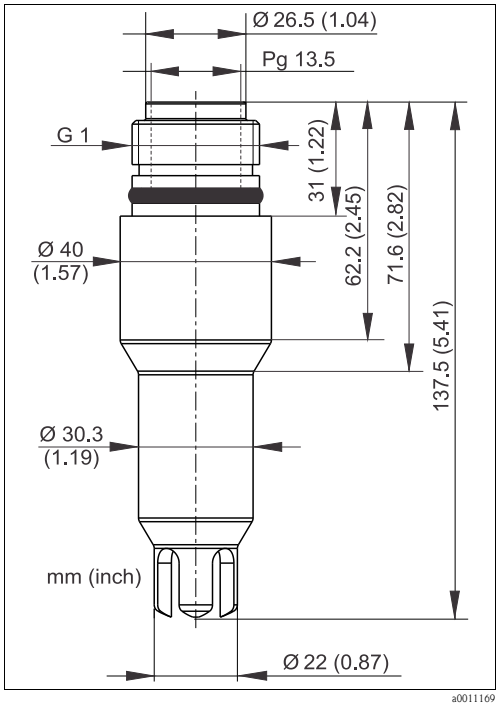

Sensor holder Pg 13.5

Certificates and approvals

Explosion protection

The stainless steel version of the CYA112 assembly (CYA112-*A21*2**) is suitable for use in hazardous zones 1 and 2.
The ATEX directive 94/9/EC does not apply because the assembly has no potential ignition source. Accordingly, it is not designated according to ATEX. Potential equalization must be implemented as described in the chapter "Installation conditions".
If sensors have accessible metallic surfaces, these surfaces have to be connected to the potential match according to the corresponding operating instructions.

Ordering information

Scope of delivery

The scope of delivery comprises:
- Ordered assembly version
- Operating Instructions, English.

Order information

Per measuring point (assembly) you have to select an order code.

Select the assembly order code as follows:

1. Select between
   – fixed immersion pipe (standard)
   – free hanging (chain)
   – or varying water levels (floater)
2. Select material and length of the immersion pipe.
   – For fixed installations (heavy mechanically force) is stainless steel the first choice.
   – For chain installation PVC version is used up to a length of 1200 mm (47.3") or stainless steel version with 600 mm (23.6") is used.
   – For the floater version (varying water levels or the measuring point is deep into the basin) only PVC is used. The immersion depth is approx. 600 mm (23.6"").
3. Select the orientation of the sensor in the medium.
   – Straight connection angle are predominantly used for pH measurement.
   – 45° angle are used for desolved oxygen measurement.
   – 90° angle are used for turbidity measurement at outlets with low water levels.
4. Select the thread.

The standard version of the assembly contains immersion pipe with connection angle, sensor adapter, rubber plug and splash protection cap for cable routing.
Depending on the length of the immersion pipe, the PVC version contains one or two weights for stabilization.
The chain version additionally contains a multifunctional clamp ring with bracket to fix the chain (the chain is part of the holder system CYH112).

Order code

You can create a complete and valid order code on the Internet using the configurator tool.

Enter the following address in your browser to access the product page:
www.products.endress.com/cya112

1. You can choose from the following options on the product page located on the right:

Product page function
:: Add to product list
:: Price & order information
:: Compare this product
:: Configure this product

2. Click "Configure this product".
3. The configurator opens in a separate window. You can now configure your device and receive the complete order code that applies for the device.
4. Afterwards, export the order code as a PDF or Excel file. To do so, click the appropriate button at the top of the page.

Product structure

The following product structure represents the status of printing. You can create a complete and valid order code on the Internet using the configurator tool.

	Approvals						
	A	w/o					
		Immersion pipe					
		A	Standard				
		B	Chain				
		C	Floater 40 mm (1.57") only for PVC version				
			Immersion pipe, diameter, length				
			11A	PVC, 40 mm (1.57"), 600 mm (23.6")			
			11B	PVC, 40 mm (1.57"), 1200 mm (47.2")			
			11C	PVC, 40 mm (1.57"), 1800 mm (70.9")			
			11D	PVC, 40 mm (1.57"), 2400 mm (94.5")			
			21A	Stainless steel, 40 mm (1.57"), 600 mm (23.6")			
			21B	Stainless steel, 40 mm (1.57"), 1200 mm (47.2")			
			21C	Stainless steel, 40 mm (1.57"), 1800 mm (70.9")			
			21D	Stainless steel, 40 mm (1.57"), 2400 mm (94.5")			
			21E	Stainless steel, 40 mm (1.57"), 3600 mm (142")			
				Connection-angle sensor			
				1A	PVC, straight		
				1B	PVC, 45°		
				2A	Stainless steel, straight		
				2B	Stainless steel, 45°		
				2C	Stainless steel, 90°		
					Sensor adapter		
					A	G1	
					B	NPT ¾"	
					C	G¾	
					D	G1½ (for stainless-steel immersion pipe only)	
					E	Pg 13.5	
CYA112-							basic order code

The following options are available (multiple selection possible):

Option code	Description
KA	Multifunctional clamp ring
IA	Quick fastener G1
KB	Wall mounting set

Example:
The order code CYA112-AB11B1BCIA results in:

Immersion pipe: Chain, PVC 1200 mm (47.3")
Connection angle: PVC 45°
Sensor adapter: G¾
Accessories: Quick fastener G1

Accessories

In the following sections, you find the accessories available at the time of issue of this documentation. For information on accessories that are not listed here, please contact your local service or sales representation.

Multifunctional clamp ring

- Chain retainer in conjunction with the triangle carabiner
- Working height adjustment of the main pipe (version main pipe with transverse pipe)
- The multifunctional clamp ring acts as an anti-slip lock on transverse pipes, main pipes and assemblies.
- Material: POM - GF
- Order No. 71092049

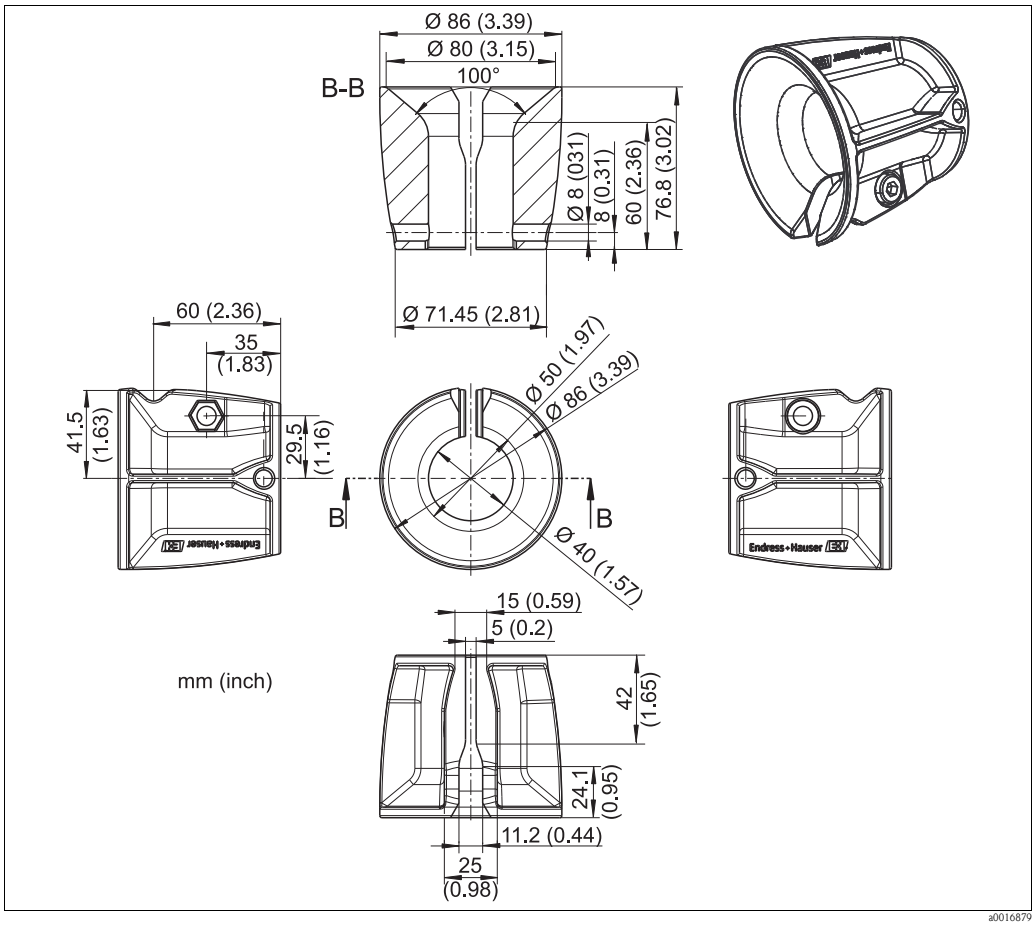

Multifunctional clamp ring

Immersion pipe support
- Immersion pipe support for comfortable maintenance
- Material: stainless steel
- Order No. 71092054

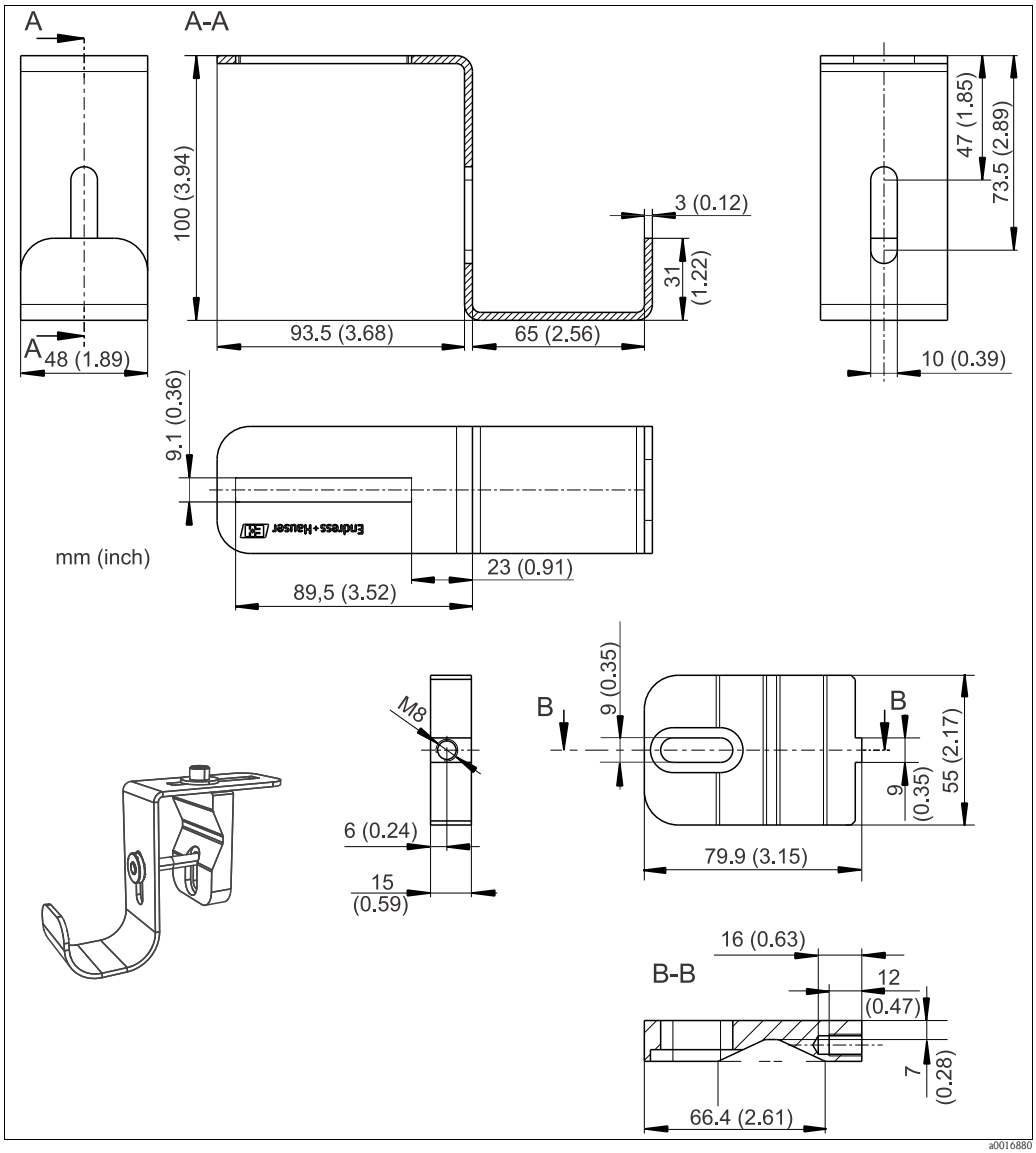

Immersion pipe support

Wall mounting set
- 2 pipe clamps D 40; material: PE
- 1 worm-drive hose clip for height adjustment
- Order No.: 71132469

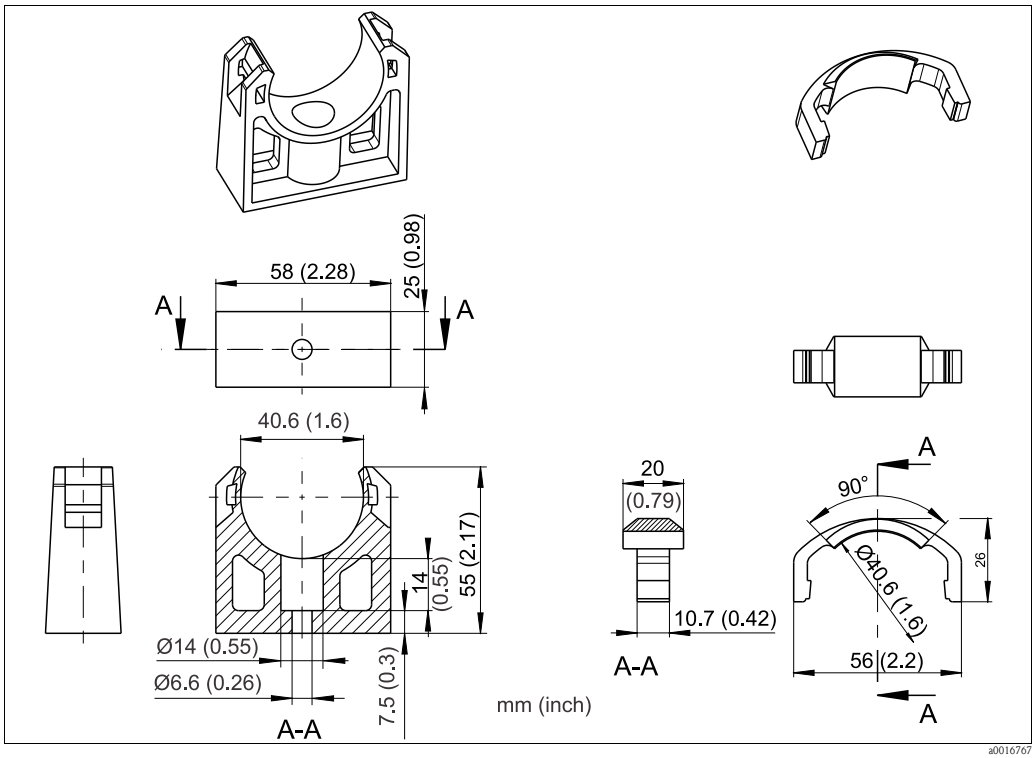

Pipe clamp

Triangle carabiner
- Used to fix the chain (together with multifunctional clamp ring)
- Material: stainless steel
- Order No. 71092052

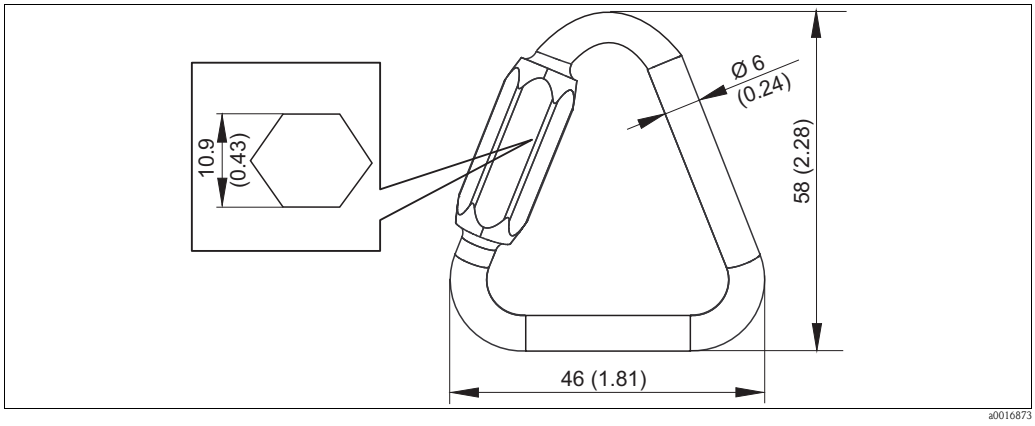

Triangle carabiner

Hook-and-loop cable ties
- To fix the cables
- Material: PE / PA (polyethylene / polyamide)
- Order No. 71092051

Mounting tool
- Tool to remove the quick fastener
- Material: stainless steel
- Order No. 71093438

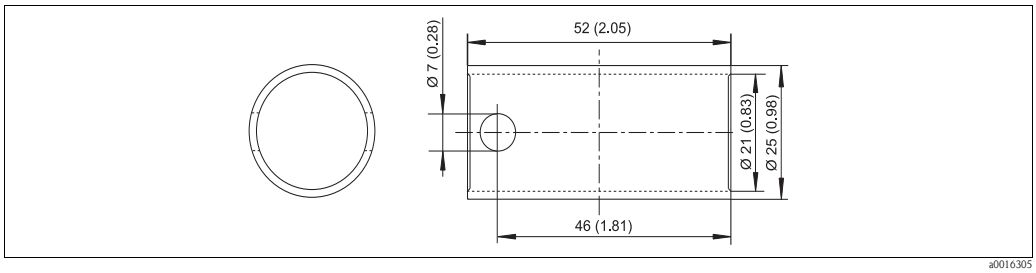

Mounting tool

Quick fastener
- For the quick and easy installation and exchange of sensors
- Material: POM – GF
- Order No. 71093377

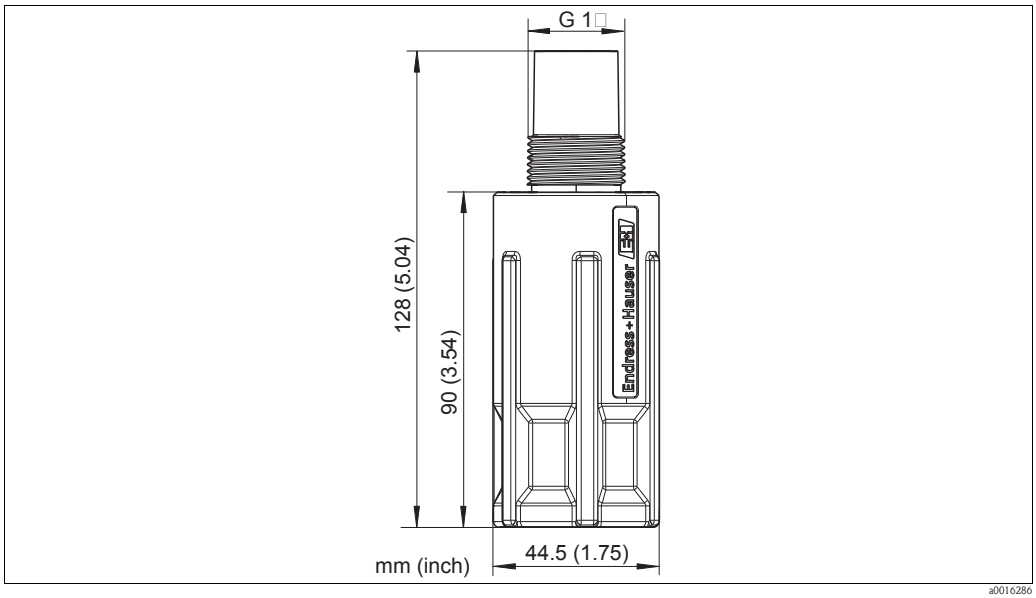

Quick fastener

Sensor adapter NPT ¾"
- Sensor adapter G1 to NPT ¾"
- Material: POM – GF
- Order No. 71093382

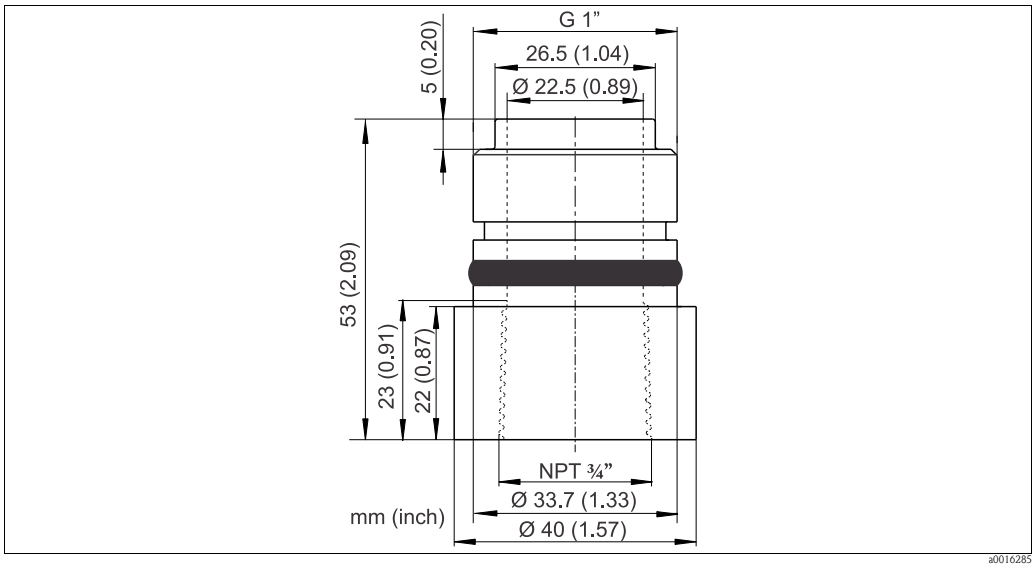

Sensor adapter G1 to NPT¾"

Sensor adapter G¾
- Sensor adapter G1 to G¾
- Material: POM – GF
- Order No. 71093383

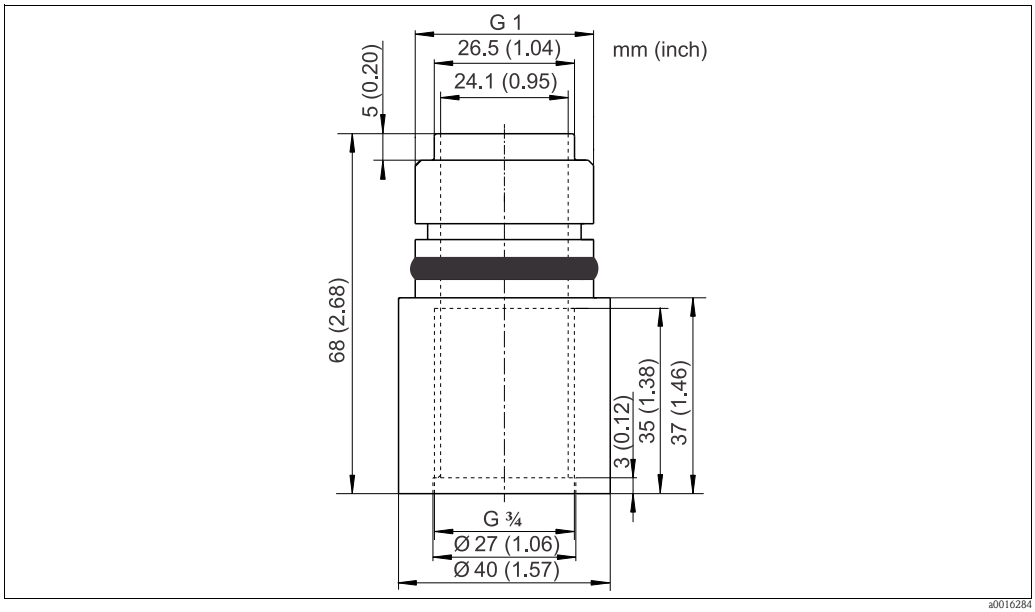

Sensor adapter G1 to G¾

Sensor adapter Pg 13.5
- Sensor adapter G1 to Pg 13.5
- Material: POM – GF
- Order No. 71093384

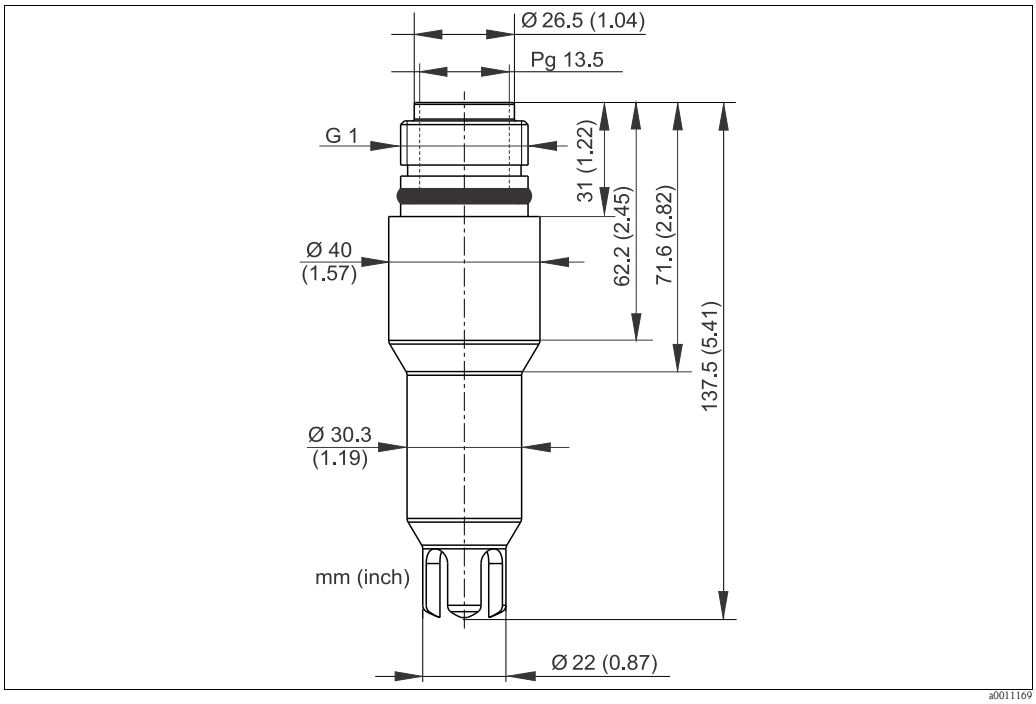

Sensor adapter G1 to Pg 13.5

Immersion pipe
- Connection thread: M36
- Material: stainless steel

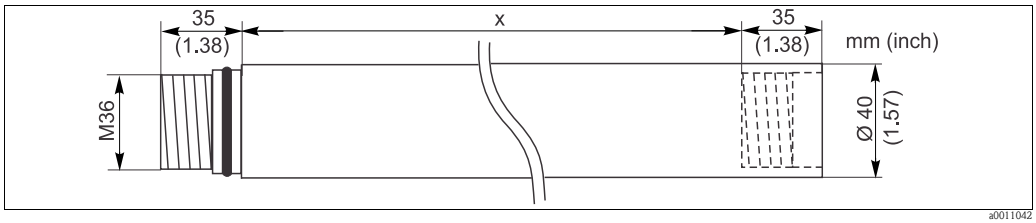

Immersion pipe

- length x = 600 mm (23.6"): Order No. 71073767
- length x = 1200 mm (47.3"): Order No. 71073706

Immersion-pipe connection straight
- M36 to G1
- Material: stainless steel
- Order No. 71073768

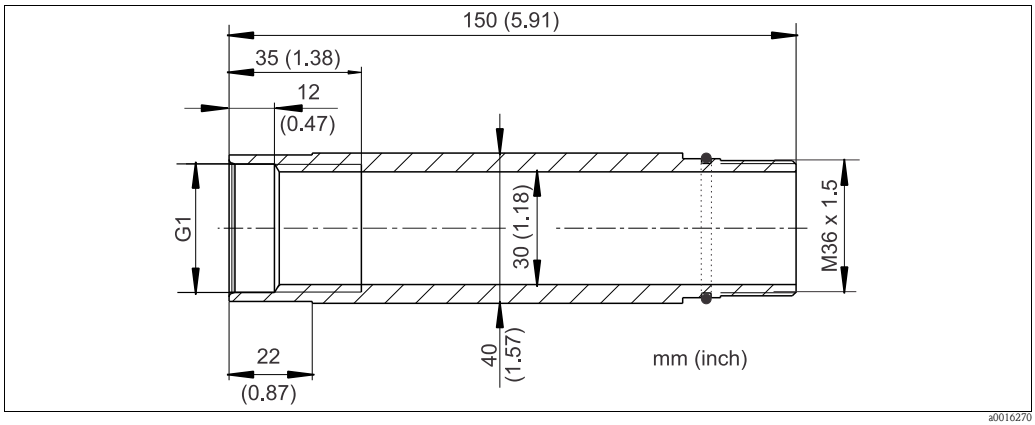

Immersion-pipe connection straight

Immersion-pipe connection 45°
- M36 to G1
- Material: stainless steel
- Order No. 71073769

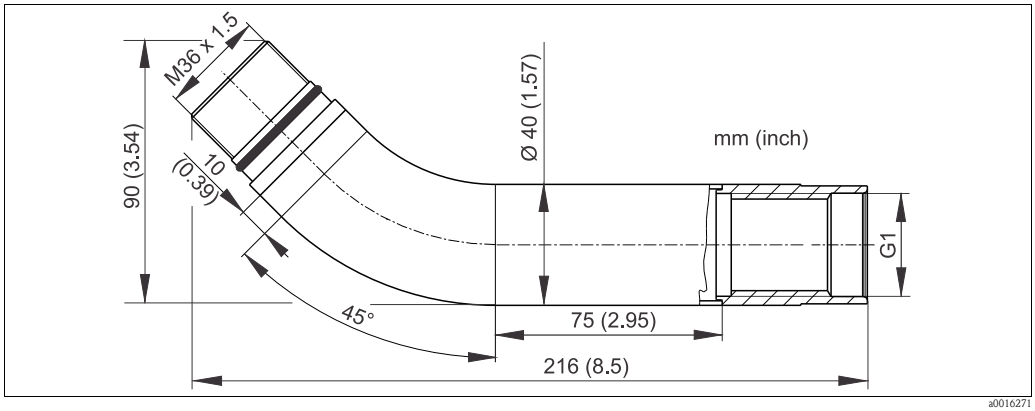

Immersion-pipe connection 45°

Immersion-pipe connection 90°
- M36 to G1
- Material: stainless steel
- Order No. 71073770

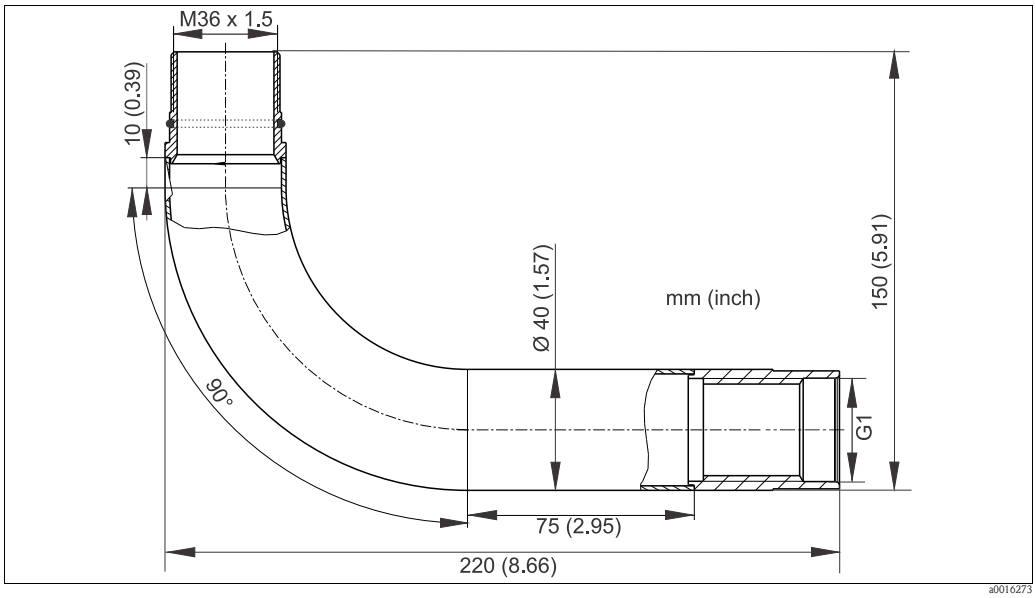

Immersion-pipe connection 90°

Protective cap
- Connection thread: M36
- Cable gland Pg 13.5
- Material: stainless steel
- Order No. 71115553

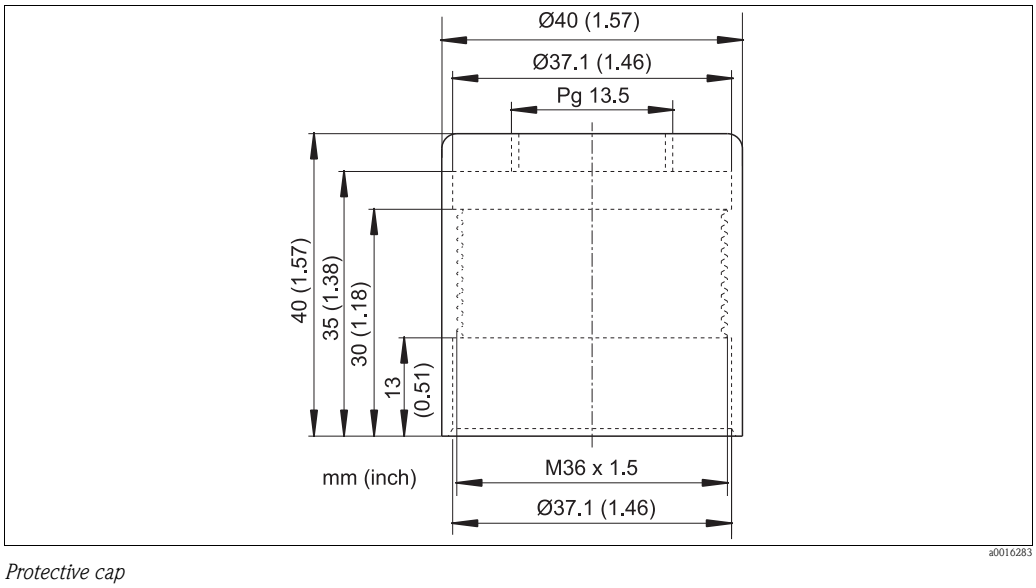

Protective cap

PVC scraper for flexible mounting of CUS71D
- The PVC scraper protects the ultrasonic sensor from getting damaged by the surface skimmer.
- Order number: C-UA 110818-60

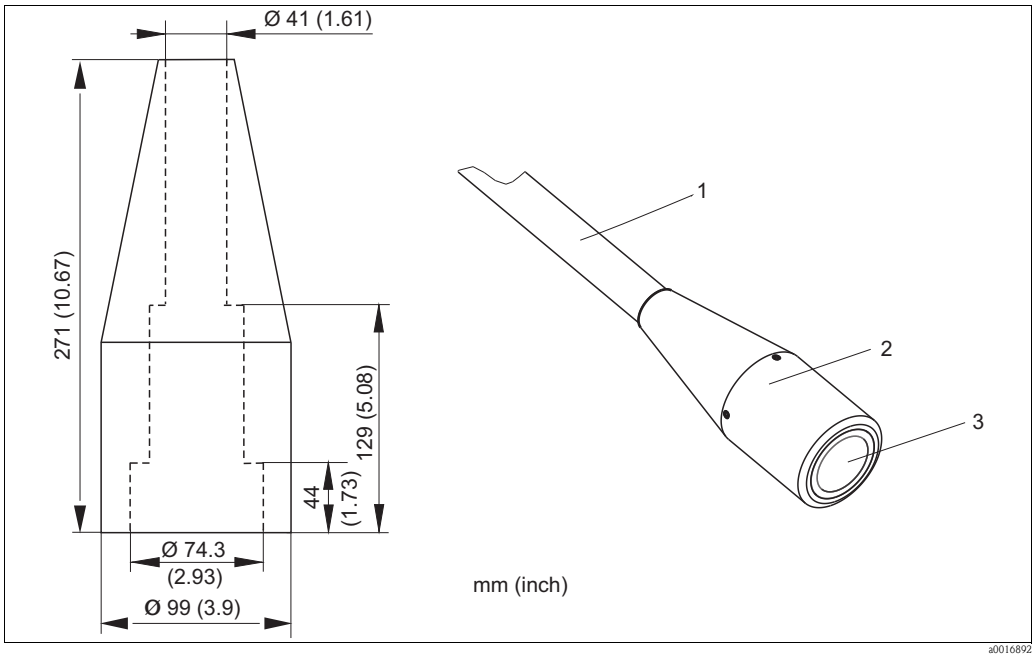

PVC scraper for CUS71D

1 Assembly CYA112
2 PVC-scraper
3 Ultrasonic sensor CUS71D

CYA112 spray cleaning for installation on immersion pipe
- Versions in 600 mm and 1200 mm
- For assembly CYA112 version: 600 ... 2400 mm, straight
- Material:
  - Pipe: PVC-U
  - Spacers: PA
  - Worm drive hose clips: stainless steel 1.4401 (AISI 316)
- Order No. for 600 mm - version: 71158245
- Ordet No. for 1200 mm - version: 71158246

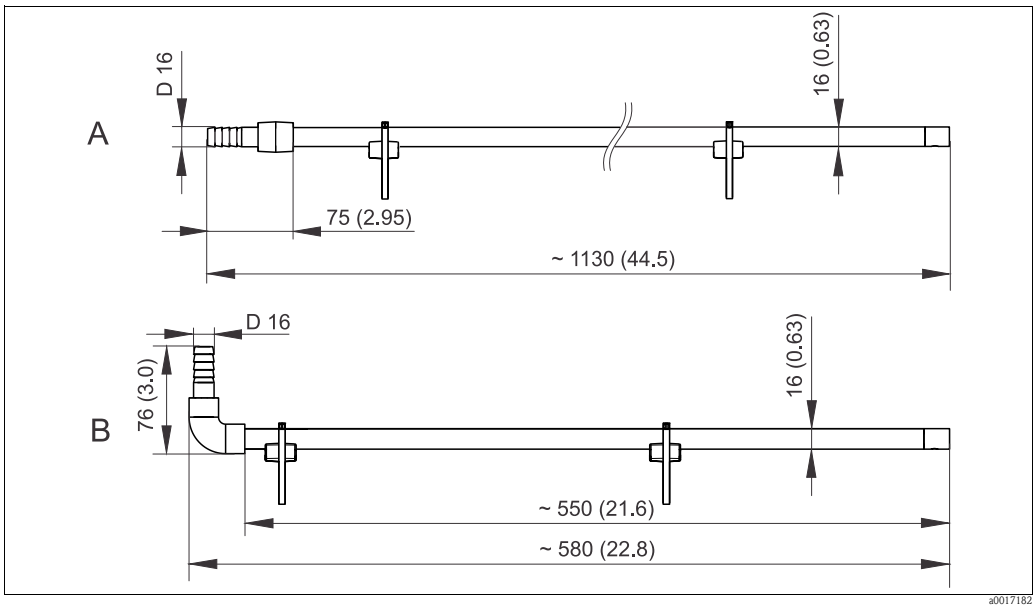

Spray cleaning for CYA112

A Version: 1200 mm
B Version: 600 mm

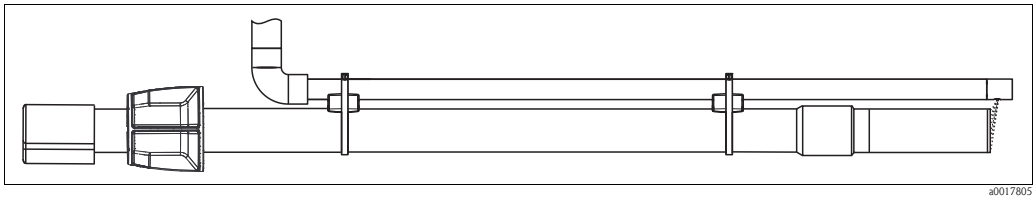

Example of an installed spray cleaning

Instruments International

Endress+Hauser
Instruments International AG
Kaegenstrasse 2
4153 Reinach
Switzerland

Tel.+41 61 715 81 00
Fax+41 61 715 25 00
www.endress.com
info@ii.endress.com

Endress+Hauser

People for Process Automation

TI00432C/07/EN/13.12
71147941
Printed in Germany / FM+SGML 6.0 / DT