K150/…

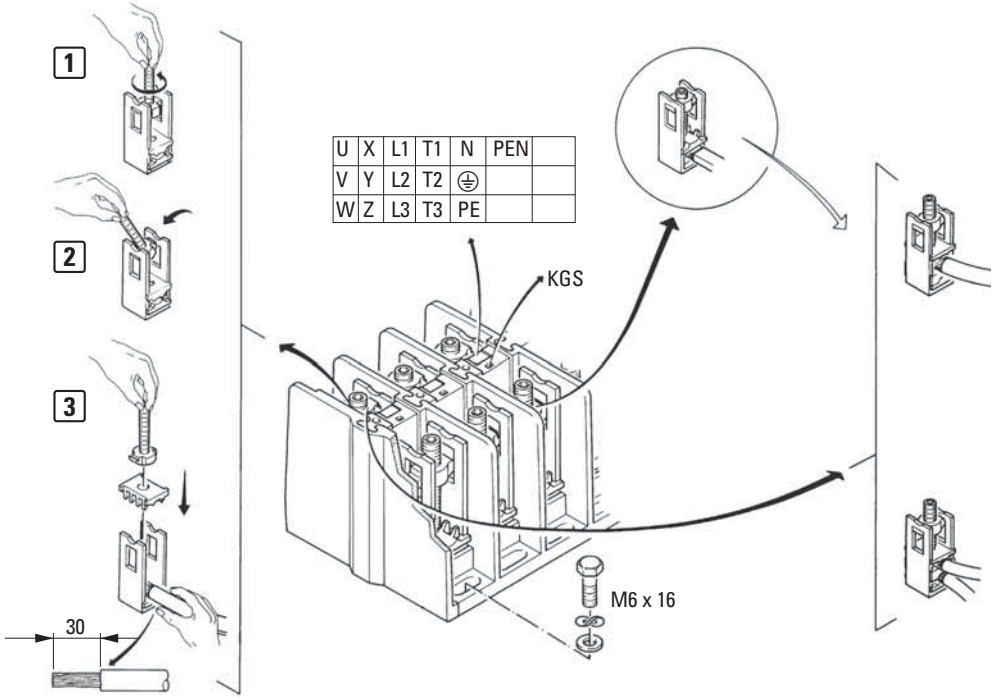

Eaton Industries GmbH, Hein-Moeller-Straße 7-11, 53115 Bonn, Germany
© 1989 by Eaton Industries GmbH, www.eaton.com/moeller/support All Rights Reserved
10/89 AWA34-607 DHW
Printed in Germany (11/11)