Features

- Knurled nut suitable for tool mounting
- Mechanical detent for vibration protection
- Gold-plated and machined contacts
- Degree of protection: IP67 / IP68 / IP69K

Technical data

Number of pins	3	4	5	8
Electrical data				
Operating voltage U_B	Max. 250 V AC/DC		Max. 60 V AC/DC	Max. 30 V AC/DC
Testing voltage	> 1500 V_{eff} AC			
Operating current	Max. 4 A			Max. 2 A
Volume resistance	< 5 mΩ			
Ambient conditions				
Ambient temperature	-40 … 90 °C for body Information on cable quality can be found beginning on page 10			
Degree of pollution	3			
Mechanical data				
Contact elements	Spring-loaded contact sockets			
Degree of protection	IP67 / IP68 / IP69K			
Material				
Contacts	CuSn / Au			
Contact surface	Au			
Body	TPU, black			
Coupling nut	Die-cast zinc			
Approvals and certificates of compliance				
UL file number	E231213 Prerequisite for UL approval is the use of a UL-approved cable quality.			

Dimensions

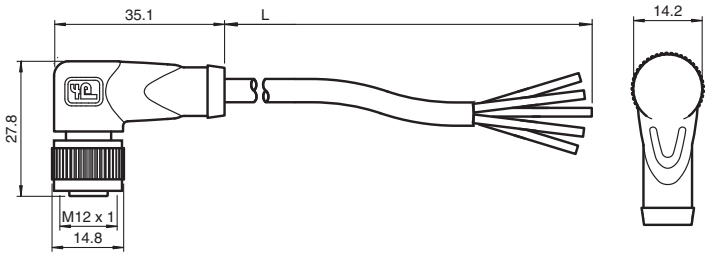

Electrical connection

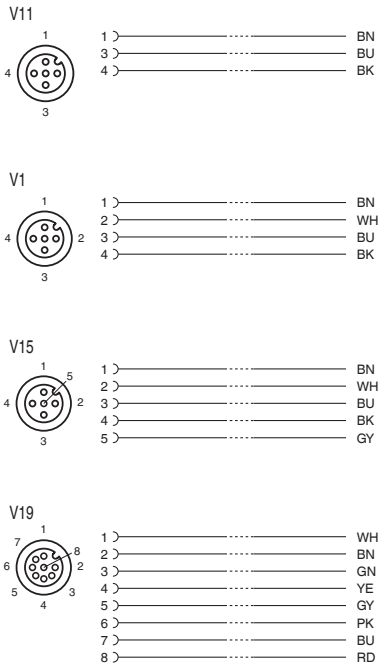

Order codes

Cable lengths in m
0.3 to 50

V . . – W – . . . . M – . . . . . .

Cable quality

			V11	V1	V15	V19
–	PVC	PVC, gray (0.34 mm²)	○	○	○	–
BK	PVC-U	PVC, UL-approved, black (0.34 mm²)	○	○	–	–
YE	PVC-U	PVC, UL-approved, yellow (0.34 mm²)	○	○	–	–
–	PUR	PUR, halogen-free, gray (0.34 mm²)	●	●	●	–
BK	PUR-U	PUR, halogen-free, UL-approved, black (0.34 mm²)	○	○	–	–
YE	PUR-U	PUR, halogen-free, UL-approved, yellow (0.34 mm²)	○	○	–	–
BK	PUR-U	PUR, halogen-free, UL-approved, black (0.25 mm²)	–	–	–	●
BK	PUR-U/0.75	PUR, halogen-free, UL-approved, black (0.75 mm²)	–	–	○	–
–	PUR H/S	PUR, halogen-free, irradiated, orange (0.34 mm²)	–	○	–	–
OR	POC	POC, welding bead resistant, orange (0.34 mm²)	–	○	–	–

● Standard, cable lengths of 2 m, 5 m and 10 m available in stock
○ Available, minimum order quantity applies in some cases
– Not available

Number of pins

V11	3-pin
V1	4-pin
V15	5-pin
V19	8-pin