SCHMERSAL

EN Operating instructions. . . . . .pages 1 to 6
Original

Content

1 About this document
1.1 Function 1
1.2 Target group: authorised qualified personnel. 1
1.3 Explanation of the symbols used 1
1.4 Appropriate use 1
1.5 General safety instructions 1
1.6 Warning about misuse 1
1.7 Exclusion of liability 2

2 Product description
2.1 Ordering code 2
2.2 Special versions. 2
2.3 Destination and use 2
2.4 Technical data 2
2.5 Safety classification 2

3 Mounting
3.1 Dimensions 3
3.2 Mounting of the position switches 3
3.3 Mounting of the actuating heads 3
3.4 Actuation of the position switches 4

4 Electrical connection
4.1 General information for electrical connection. 4
4.2 Contact variants 4

5 Set-up and maintenance
5.1 Functional testing. 4
5.2 Maintenance 4

6 Disassembly and disposal
6.1 Disassembly. 4
6.2 Disposal 4

7 EU Declaration of conformity

1. About this document

1.1 Function

This operating instructions manual provides all the information you need for the mounting, set-up and commissioning to ensure the safe operation and disassembly of the safety switchgear. The operating instructions must be available in a legible condition and a complete version in the vicinity of the device.

1.2 Target group: authorised qualified personnel

All operations described in this operating instructions manual must be carried out by trained specialist personnel, authorised by the plant operator only.

Please make sure that you have read and understood these operating instructions and that you know all applicable legislations regarding occupational safety and accident prevention prior to installation and putting the component into operation.

The machine builder must carefully select the harmonised standards to be complied with as well as other technical specifications for the selection, mounting and integration of the components.

1.3 Explanation of the symbols used

Information, hint, note:
This symbol is used for identifying useful additional information.

Caution: Failure to comply with this warning notice could lead to failures or malfunctions.
Warning: Failure to comply with this warning notice could lead to physical injury and/or damage to the machine.

1.4 Appropriate use

The products described in these operating instructions are developed to execute safety-related functions as part of an entire plant or machine. It is the responsibility of the manufacturer of a machine or plant to ensure the correct functionality of the entire machine or plant.

The safety switchgear must be exclusively used in accordance with the versions listed below or for the applications authorised by the manufacturer. Detailed information regarding the range of applications can be found in the chapter "Product description".

1.5 General safety instructions

The user must observe the safety instructions in this operating instructions manual, the country-specific installation standards as well as all prevailing safety regulations and accident prevention rules.

Further technical information can be found in the Schmersal catalogues or in the online catalogue on the Internet: www.schmersal.net.

The information contained in this operating instructions manual is provided without liability and is subject to technical modifications.

There are no residual risks, provided that the safety instructions as well as the instructions regarding mounting, commissioning, operation and maintenance are observed.

1.6 Warning about misuse

In case of improper use or manipulation of the safety switchgear, personal hazards or damages to machinery or plant components cannot be excluded when safety switchgear is used. The relevant requirements of the standard ISO 14119 must be observed.

x.000 / 03.2016 / v.A. - 101103624-EN / R / 2016-03-01 / AE-Nr. 5787

1.7 Exclusion of liability

We shall accept no liability for damages and malfunctions resulting from defective mounting or failure to comply with this operating instructions manual. The manufacturer shall accept no liability for damages resulting from the use of unauthorised spare parts or accessories.

For safety reasons, invasive work on the device as well as arbitrary repairs, conversions and modifications to the device are strictly forbidden; the manufacturer shall accept no liability for damages resulting from such invasive work, arbitrary repairs, conversions and/or modifications to the device.

2. Product description

2.1 Ordering code

This operating instructions manual applies to the following types:

①②**2**③④-⑤**Z**⑥-⑦-⑧-⑨-⑩

No.	Option	Description
①	Z	Snap action ⊖
	T	Slow action ⊖
②	Actuator selection, refer to catalogue	
③	3	Slim design
	5	Large design
④	5	Metal enclosure
	6	Thermoplastic enclosure
⑤	02	2 NC
	11	1 NO / 1 NC
	20	2 NO (not suitable for safety applications)
⑥	H	Slow action with staggered contacts
	UE	Slow action with overlapping contacts
⑦		Cable entry M20
	ID	Cut clamp terminals
	NPT	Cable entry NPT 1/2"
	ST	M12 connector (A coding)
	2310	M12 connector (B coding)
⑧	1297	Enclosure with transverse slotted holes
⑨	2138	Roller lever 7H for safety applications
⑩	1637	Gold-plated contacts

In accordance with the Machinery Directive, the type plate on safety components is labelled as "Safety component".

Only if the information described in this operating instructions manual are realised correctly, the safety function and therefore the compliance with the Machinery Directive is maintained.

2.2 Special versions

For special versions, which are not listed in the order code below 2.1, these specifications apply accordingly, provided that they correspond to the standard version.

2.3 Destination and use

The position switches with safety function are suitable for sliding and hinged guards, which need to be closed in order to ensure the required operational safety.

The user must evaluate and design the safety chain in accordance with the relevant standards and the required safety level.

If multiple safety components are wired in series, the Performance Level to ISO 13849-1 will be reduced due to the restricted error detection under certain circumstances.

The entire concept of the control system, in which the safety component is integrated, must be validated to the relevant standards.

2.4 Technical data

Standards:	IEC 60947-5-1, ISO 13849-1, BG-GS-ET-15
Design:	EN 50047
Enclosure:	236, 256: glass-fibre reinforced thermoplastic, self-extinguishing, 235: zinc die-cast, enamel finish, 255: aluminium die-cast, enamel finish
Protection class:	IP67
Contact material:	Silver
Contact type:	change-over contact with double break, type Zb or 1 NC or 2 NC contacts, with galvanically separated contact bridges
Switching system:	⊖ IEC 60947-5-1, slow or snap action, NC contacts with positive break
Connection:	screw terminals
Cable section:	min. 0.75 mm²; max. 2.5 mm²; solid and stranded wire with conductor ferrules
Cable entry:	235, 236: 1 x M20 x 1.5; 255: 3 x M20 x 1.5; 256: 2 x M20 x 1.5
Ambient temperature:	–30 °C … +80 °C
Mechanical life:	20 million operations
Max. switching frequency:	5000/h
Max. Actuating speed:	1 m/s
Bounce duration:	slow action: < 3 ms; snap action: in accordance with actuating speed
Switchover time:	slow action: in accordance with actuating speed
Electrical data	
Utilisation category:	AC-15, DC-13
I_e/U_e:	4 A / 230 VAC; 1 A / 24 VDC
U_{imp}:	6 kV; connector: 0.8 kV
U_i:	500 V; connector: 50 V
I_{the}:	10 A
Max. fuse rating:	6 A gG D-fuse
Required short-circuit current:	1000 A

c UL us

For NPT threads, conduit hub is to be connected to conduit before hub is connected to enclosure.
For 256 Models: Not for use with rigid conduit.

2.5 Safety classification

Standards:	ISO 13849-1
B_{10d} (NC contact):	20.000.000
B_{10d} (NO contact) at 10% ohmic contact load:	1.000.000
Service life:	20 years

$$MTTF_d = \frac{B_{10d}}{0{,}1 \times n_{op}} \qquad n_{op} = \frac{d_{op} \times h_{op} \times 3600\ s/h}{t_{cycle}}$$

(Specifications can vary depending on the application-specific parameters h_{op}, d_{op} and t_{cycle} as well as the load.)

3. Mounting

3.1 Dimensions

All measurements in mm.

Dimensions Z/T 235

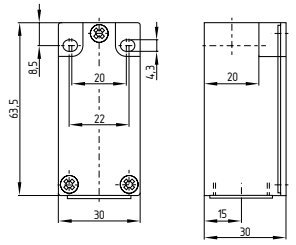

Dimensions Z/T 236

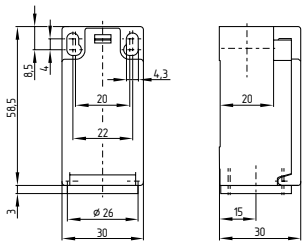

Dimensions Z/T 255

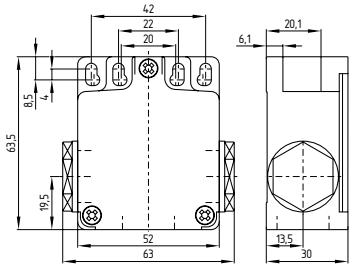

Dimensions Z/T 256

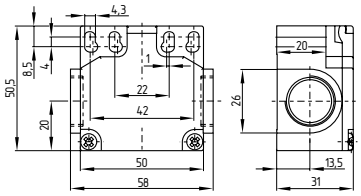

3.2 Mounting of the position switches

The mounting dimensions are mentioned at the rear of the enclosure. The fixing screws must be protected against unauthorised tampering. The enclosure must not be used as an end stop. Any mounting position. To ensure a proper functioning, the switch must be installed so that the required switch travel is obtained. For safety functions, at least the positive break travel indicated in the switch travel diagram (refer to catalogue) must be obtained. All components have sufficient after-travel to compensate for inaccuracies in the guidance of the actuating system. The actuation of the switch beyond its end stop however must be avoided.

⚠ Please observe the remarks of the standards ISO 12100, EN 953 and ISO 14119.

3.3 Mounting of the actuating heads

Repositioning the actuating heads (R, 1R, 4R, K, 3K, 4K, V.H)

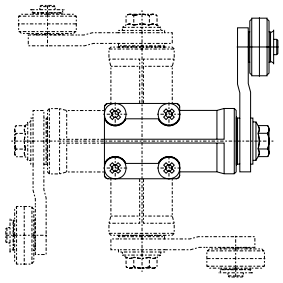

The actuating head can be repositioned by 4 x 90°.
Unscrew the four screws of the actuating head (Philips tip profile PZ1), reposition the actuating head in the desired position and retighten the four screws (tightening torque 0.45 Nm).

Repositioning the roller lever (H)

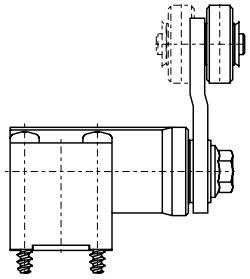

The (offset) roller arm may be reversed, so that the roller faces the inside of the arm.

Positioning the lever (.H)

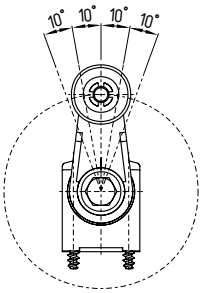

The roller lever can be repositioned over 360° on the toothed shaft in 10° steps. Unscrew the hexagonal screw approx. 4 mm, reposition the lever in the desired position and retighten the screw.

Length-adjustable lever (7H, 10H)

To adjust the length of the lever, unscrew the fixing screw of the lever. Firmly retighten the screw after the length adjustment.

⚠ Position switches with 7H, 10H actuator or spring rod lever AF are without positive break and not suitable for safety functions.
Ordering suffix for actuator 7H with positive break: -2138.

3.4 Actuation of the position switches

Top plunger

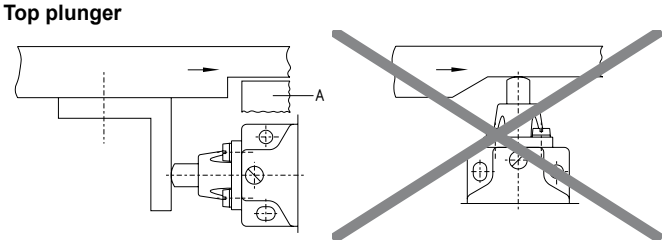

A Stop

Roller plunger

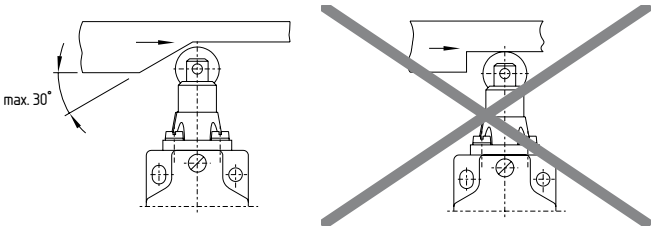

Cam disc

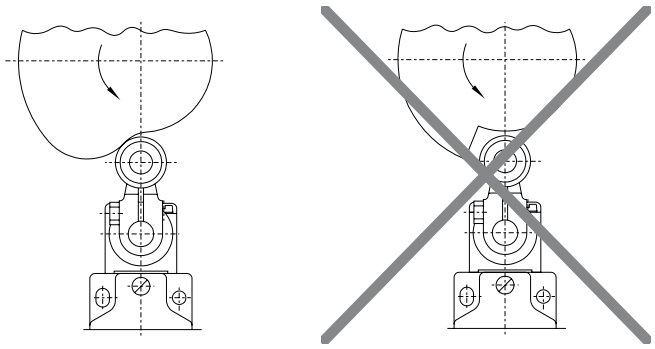

front side

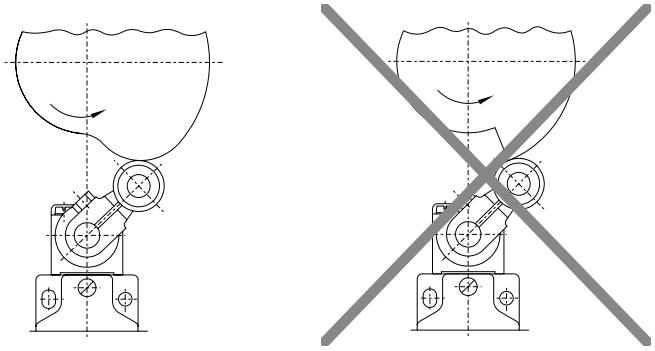

Trailing edge

4. Electrical connection

4.1 General information for electrical connection

The electrical connection may only be carried out by authorised personnel in a de-energised condition.

The contact labelling can be found in the wiring compartment of the switch. For the cable entry, suitable cable glands with an appropriate degree of protection must be used. After wiring, dust and soiling must be removed from the wiring compartment. The safety switches with thermoplastic enclosure of the 236/256 series are double-insulated. The use of a protective ground connector therefore is not authorised.

According to IEC 60204-1, the versions with connector must only be used in PELV circuits.

Z/T 236: opening the cover

4.2 Contact variants

The contacts are shown in a non-actuated condition.

13 14 21 22	11 12 21 22	13 14 23 24
Z/T 235-11Z	Z/T 235-02Z	T 235-20Z
Z/T 236-11Z	Z/T 236-02Z	T 236-20Z
Z/T 255-11Z	Z/T 255-02Z	T 255-20Z
Z/T 256-11Z	Z/T 256-02Z	T 256-20Z

Position switches with two NO contacts (-20) are not suitable for safety functions.

5. Set-up and maintenance

5.1 Functional testing

The safety function of the safety components must be tested.
The following conditions must be previously checked and met:
1. Check the switch enclosure for damage
2. Check the free movement of the actuating element
3. Check the integrity of the cable entry and connections

5.2 Maintenance

A regular visual inspection and functional test, including the following steps, is recommended:
1. Check the free movement of the actuating element
2. Remove particles of dust and soiling
3. Check cable entry and connections

Damaged or defective components must be replaced.

6. Disassembly and disposal

6.1 Disassembly

The safety switchgear must be disassembled in a de-energised condition only.

6.2 Disposal

The safety switchgear must be disposed of in an appropriate manner in accordance with the national prescriptions and legislations.

7. EU Declaration of conformity

EU Declaration of conformity

SCHMERSAL

Original

K.A. Schmersal GmbH & Co. KG
Möddinghofe 30
42279 Wuppertal
Germany
Internet: www.schmersal.com

We hereby certify that the hereafter described components both in their basic design and construction conform to the applicable European Directives.

Name of the component: Z/T 235, Z/T 236,
Z/T 255, Z/T 256

Type: See ordering code

Description of the component: Positive break position switch for safety functions or position switch without safety function

Relevant Directives:

	Valid up to April 19, 2016	Valid as of April 20, 2016
Machinery Directive [1]	2006/42/EC	2006/42/EC
Low Voltage Directive [2]	2006/95/EC	2014/35/EU
RoHS-Directive	2011/65/EU	2011/65/EU

Affixing of the CE conformity mark:
[1] for safety components, whose type plate is labelled as "Safety component"
[2] for position switches without safety function

Applied standards: DIN EN 60947-5-1:2010

Person authorised for the compilation of the technical documentation: Oliver Wacker
Möddinghofe 30
42279 Wuppertal

Place and date of issue: Wuppertal, 23 February 01, 2016

Authorised signature
Philip Schmersal
Managing Director

ZT235-E-EN

The currently valid declaration of conformity can be downloaded from the internet at www.schmersal.net.

CE

K.A. Schmersal GmbH & Co. KG
Möddinghofe 30, D - 42279 Wuppertal
Postfach 24 02 63, D - 42232 Wuppertal

Phone: +49 - (0)2 02 - 64 74 - 0
Telefax: +49 - (0)2 02 - 64 74 - 1 00
E-Mail: info@schmersal.com
Internet: http://www.schmersal.com