Product data sheet
Characteristics

XUZC08
accessory for sensor - reflector - 8.6 x 29.5 mm

Main

Range of product	OsiSense XU
Accessory / separate part category	Sensor accessories
Accessory / separate part type	Reflector
Accessory / separate part destination	Standard reflex photo-electric sensor
Shape of reflector	Rectangular
Sale per indivisible quantity	1

Complementary

Accessory dimension	8.6 x 29.5 mm
Product weight	0.006 kg

Offer Sustainability

Sustainable offer status	Not Green Premium product
RoHS (date code: YYWW)	Compliant - since 1214 - Schneider Electric declaration of conformity

The information provided in this documentation contains general descriptions and/or technical characteristics of the performance of the products contained herein.
This documentation is not intended as a substitute for and is not to be used for determining suitability or reliability of these products for specific user applications.
It is the duty of any such user or integrator to perform the appropriate and complete risk analysis, evaluation and testing of the products with respect to the relevant specific application or use thereof.
Neither Schneider Electric Industries SAS nor any of its affiliates or subsidiaries shall be responsible or liable for misuse of the information contained herein.

XUZC08
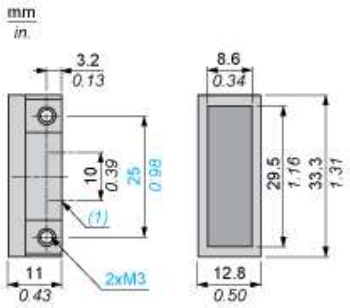
Dimensions